marathon®

Explosion Proof Motors

Model No: 825127.00
Catalog No: C373A

Explosion Proof Motor, 5 HP, 3 Ph, 60 Hz, 230/460 V, 3600 RPM, 184TC Frame, EPFC

©2026 Marathon, All Rights Reserved.

marathon®

Product Information Packet: Model No: 825127.00, Catalog No: C373A Explosion Proof Motor, 5 HP, 3 Ph, 60 Hz, 230/460 V, 3600 RPM, 184TC Frame, EPFC

Nameplate Specifications

Phase	**3**	Output HP	**5 Hp**
Output KW	**3.7 kW**	Voltage	**230/460 V**
Speed	**3505 r/min**	Synchronous RPM	**3600 r/min**
Service Factor	**1.15**	Frame	**184TC**
Enclosure	**Explosion Proof Fan cooled**	Thermal Protection	**Thermostat**
Efficiency	**88.5 %**	Ambient Temperature	**40 °C**
Frequency	**60 Hz**	Current	**11.8/5.9 A**
Power Factor	**88.5**	Duty	**Continuous**
Insulation Class	**F**	Design Code	**B**
KVA Code	**J**	Drive End Bearing Size	**6207**
Opp Drive End Bearing Size	**6206**	UL	**UL Listed; also, UL Certified for Canada**
CSA	**N**	CE	**N**
IP Code	**54**	Number of Speeds	**1**
Hazardous Location	**DIV 1 EXP PROOF CL I GR CD CL II GR FG T3B**		

Technical Specifications

Electrical Type	**Squirrel Cage Inverter Rated**	Starting Method	**Line Or Inverter**
Poles	**2**	Rotation	**Reversible**
Resistance Main	**2.32 O**	Mounting	**Rigid Base**
Motor Orientation	**Horizontal**	Drive End Bearing	**Ball**
Opp Drive End Bearing	**Ball**	Frame Material	**Cast Iron**
Shaft Type	**T**	Overall Length	**18.62 in**
Frame Length	**10.0 in**	Shaft Diameter	**1 1/8 in**
Shaft Extension	**2.75 in**	Assembly/Box Mounting	**F1 Only**
Inverter Load	**Constant 10:1**		

Drawings

Connection Drawing	**EE7308T**	Outline Drawing	**035673-1000**

This is an uncontrolled document once printed or downloaded and is subject to change without notice. Date Created: 16/10/2026

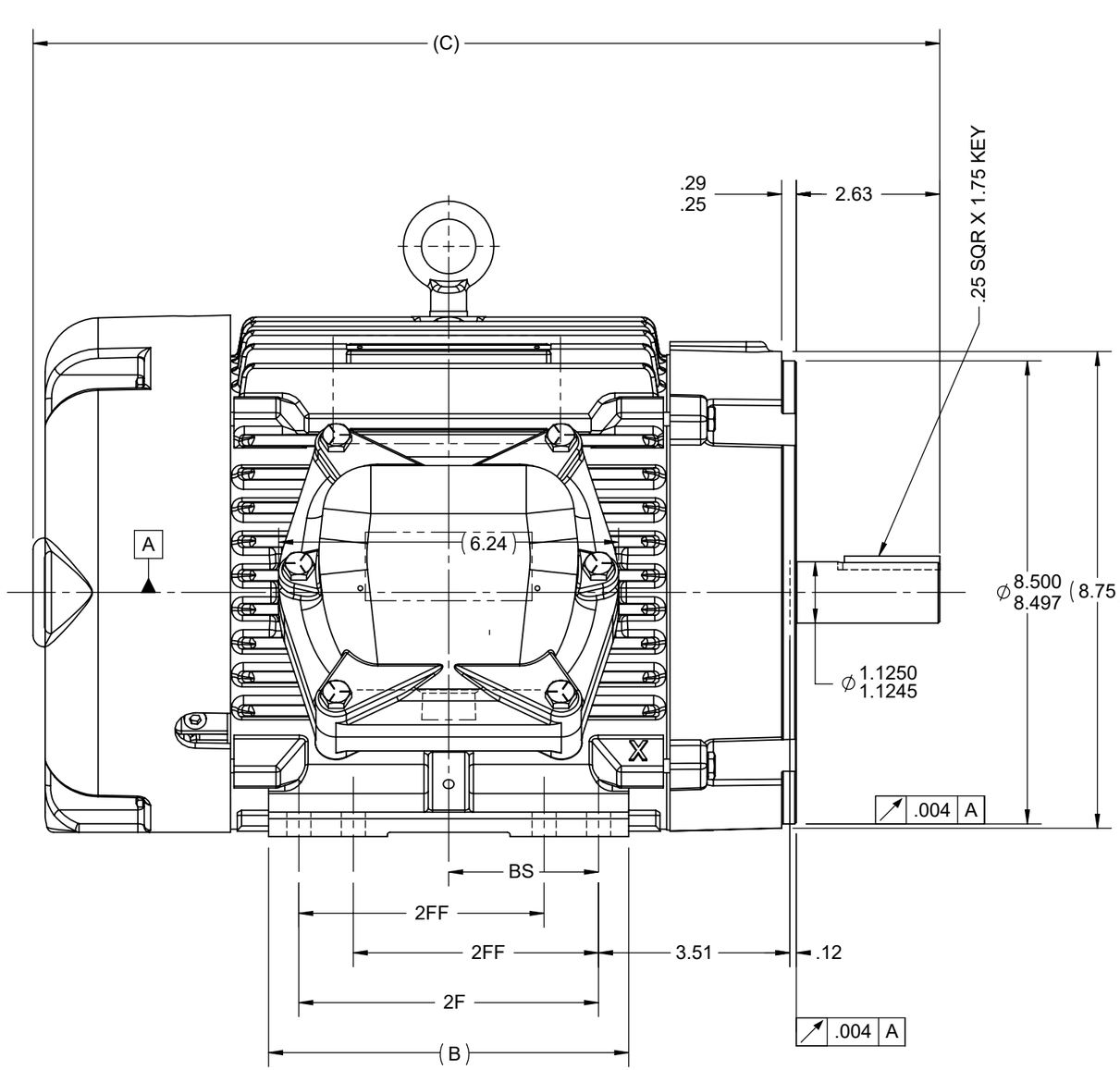

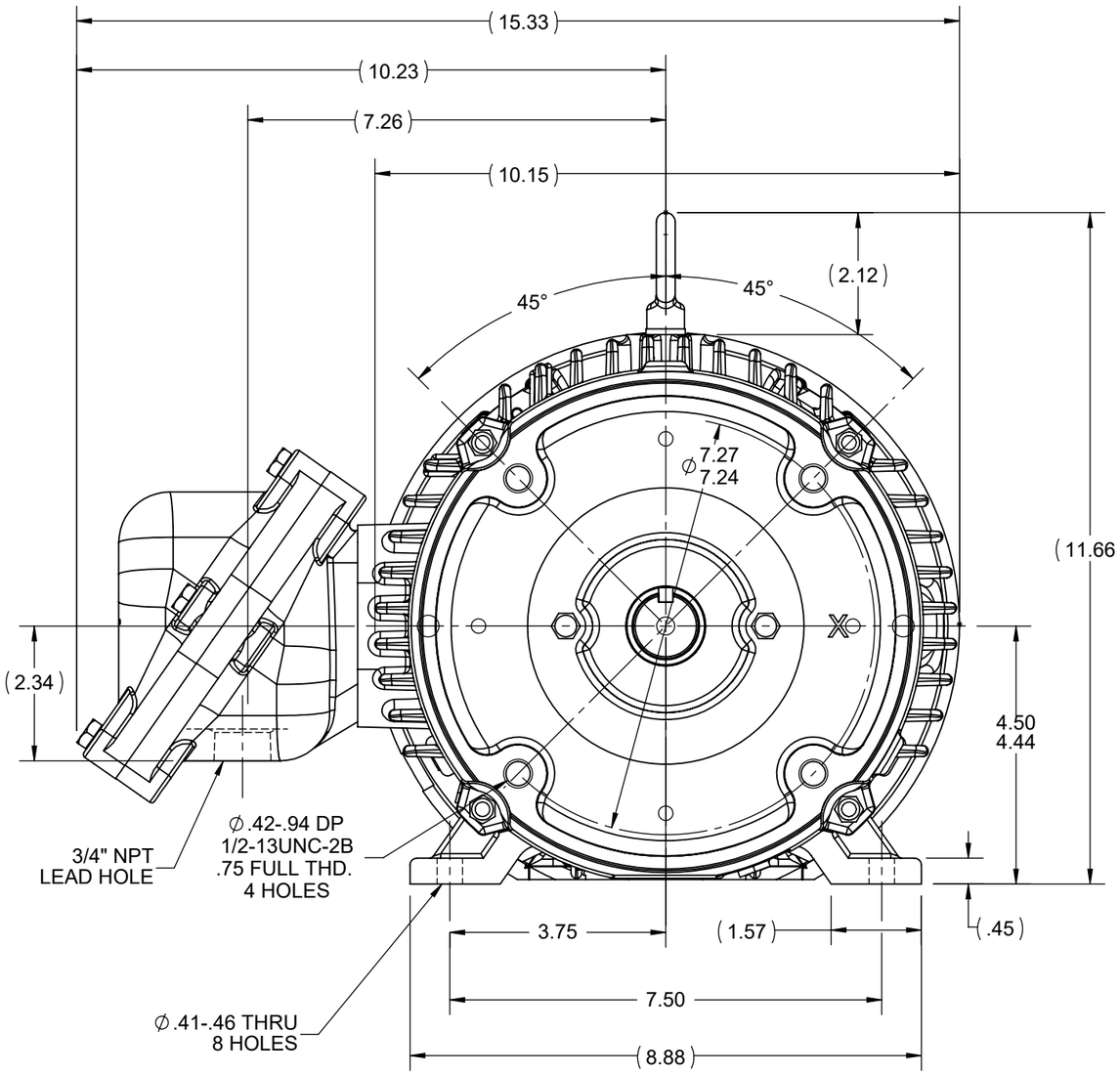

NOTES:
1. NAMEPLATE TO BE READ FROM CONDUIT BOX SIDE OF MOTOR.
2. CONDUIT BOX CAN ROTATED IN 90° STEPS.
3. CONDUIT BOX CAN BE MOUNTED ON OPPOSITE SIDE BY REMOVING BRACKETS AND TURNING FRAME 180°

1000	182/184	18.63	8.61	7.50	5.50	3.75
800	182/184	16.63	6.61	5.50	4.50	2.75
DASH	FRAME	C	B	2F	2FF	BS

DRAWING REVISION D	REVISION BY SB	REV DATE/© DATE 07/24/2025
REQUEST NUMBER CR-0023556	APPROVED BY SBD	DATE 07/24/2025
REQUEST NUMBER DESCRIPTION: DRAWING TITLE BLOCK UPDATED		

COPYRIGHT (PER REVISION DATE) MARATHON ELECTRIC, LLC. ALL RIGHTS RESERVED. PROPRIETARY AND CONFIDENTIAL INFORMATION - THIS DOCUMENT IS THE PROPERTY OF MARATHON ELECTRIC, LLC. ("OWNER") AND CONTAINS OWNER'S PROPRIETARY INFORMATION. ANY PERSON, CORPORATION OR OTHER FIRM RECEIVING IT IS DEEMED, BY RECEIVING IT, TO AGREE THAT IT, AND/OR ANY PART OF IT, SHALL NOT BE DISCLOSED TO ANY PERSON, CORPORATION OR OTHER ENTITY, DUPLICATED, AND/OR USED, EXCEPT AS EXPRESSLY APPROVED IN WRITING IN ADVANCE BY OWNER. THIS DOCUMENT SHALL BE RETURNED TO OWNER UPON REQUEST. IT MAY BE SUBJECT TO CERTAIN RESTRICTIONS UNDER APPLICABLE EXPORT CONTROL LAWS AND REGULATIONS.

PRIMARY DIMENSIONS ARE INCH
mm DIMENSIONS IN [BRACKETS]
ARE FOR REFERENCE ONLY

DRAWN BY	TJW
DATE	3/25/2008
APPROVED BY	SW
DATE	3/26/2008
REFERENCE	
THIRD ANGLE PROJECTION	

marathon™

DESCRIPTION
OUTLINE
180 FR. EPFC - C FACE - CAST C'BOX

MATERIAL | PROCESS/FINISH

SIZE B | DRAWING NUMBER 035673 | SHEET 1 OF 1

HIGH VOLTAGE

(U1) T1 — L1
(V1) T2 — L2
(W1) T3 — L3
(U2) T4
(U3) T7
(V2) T5
(V3) T8
(W2) T6
(W3) T9

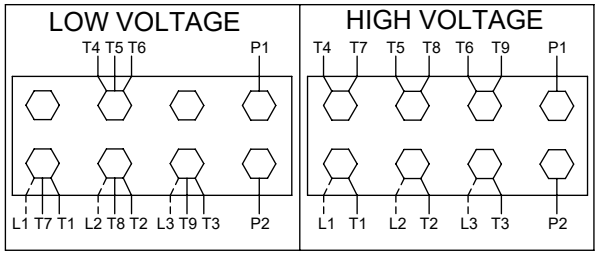

THREE PHASE DUAL VOLTAGE MOTOR

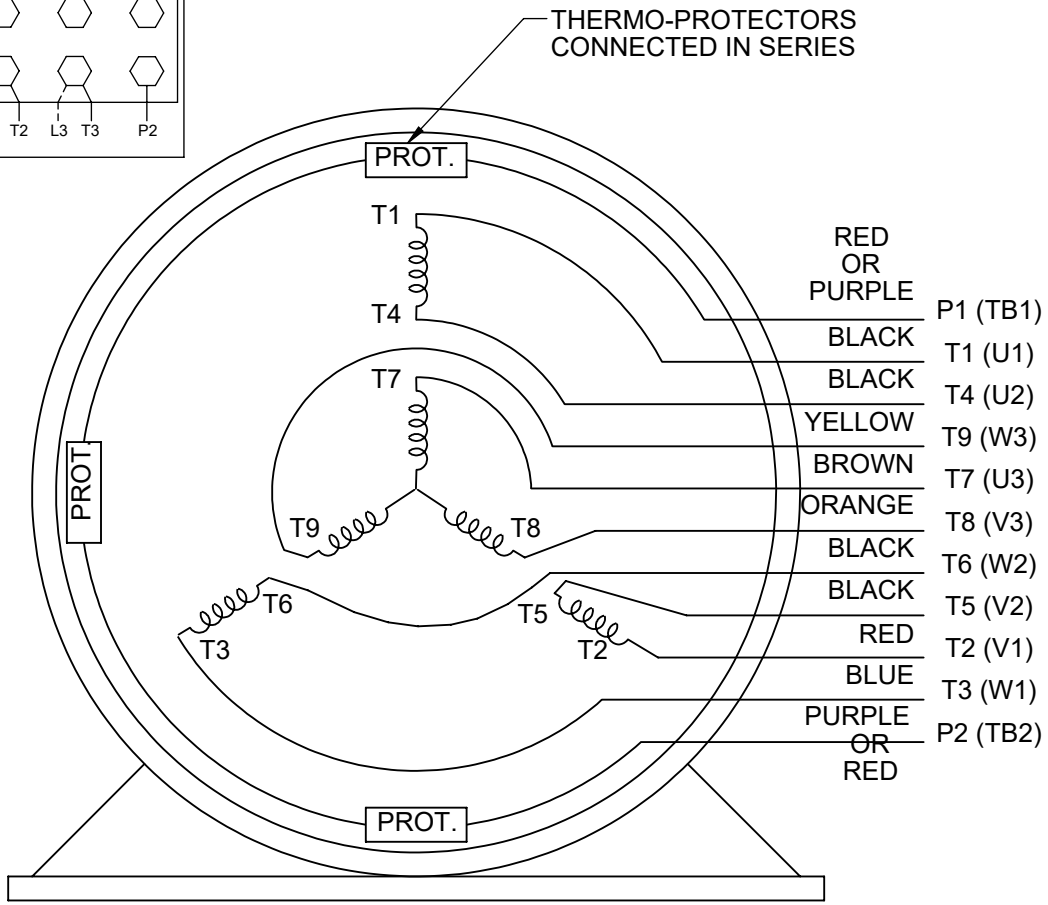

VIEW OF TERMINAL END

NOTE FOR FACTORY USE ONLY:
TO SURGE TEST FOR COMMON CONNECT:
HIGH VOLT: CONNECT P1 TO T1
THEN P2 TO L1
LOW VOLT: CONNECT P1 TO T1 & T7,
THEN P2 TO L1

LOW VOLTAGE

(U1) T1
(U3) T7 — L1
(V1) T2
(V3) T8 — L2
(W1) T3
(W3) T9 — L3
(U2) T4
(V2) T5
(W2) T6

NOTE: LEAD'S COLOR CAN BE YELLOW OR WHITE FOR IMG PLANT

DRAWING REVISION: U	REVISION BY: SB	REV DATE/© DATE: 08/01/2025	PRIMARY DIMENSIONS ARE INCH mm DIMENSIONS IN [BRACKETS] ARE FOR REFERENCE ONLY	DRAWN BY: SMC	marathon™
REQUEST NUMBER: CR-0023654	APPROVED BY: SBD	DATE: 08/01/2025		DATE: 05-13-1992	
REQUEST NUMBER DESCRIPTION: DRAWING TITLE BLOCK UPDATED				APPROVED BY: TB	DESCRIPTION: CONN DIAGRAM-EXTERNAL
				DATE: 05-13-1992	3 PHASE - DUAL VOLTAGE MOTOR
				REFERENCE: EE7308/EE7300	MATERIAL / PROCESS/FINISH
				THIRD ANGLE PROJECTION	SIZE: A — DRAWING NUMBER: EE7308T — SHEET: 1 OF 1

COPYRIGHT (PER REVISION DATE) MARATHON ELECTRIC, LLC. ALL RIGHTS RESERVED. PROPRIETARY AND CONFIDENTIAL INFORMATION - THIS DOCUMENT IS THE PROPERTY OF MARATHON ELECTRIC, LLC. ("OWNER") AND CONTAINS OWNER'S PROPRIETARY INFORMATION. ANY PERSON, CORPORATION OR OTHER FIRM RECEIVING IT IS DEEMED, BY RECEIVING IT, TO AGREE THAT IT, AND/OR ANY PART OF IT, SHALL NOT BE DISCLOSED TO ANY PERSON, CORPORATION OR OTHER ENTITY, DUPLICATED, AND/OR USED, EXCEPT AS EXPRESSLY APPROVED IN WRITING IN ADVANCE BY OWNER. THIS DOCUMENT SHALL BE RETURNED TO OWNER UPON REQUEST. IT MAY BE SUBJECT TO CERTAIN RESTRICTIONS UNDER APPLICABLE EXPORT CONTROL LAWS AND REGULATIONS.