marathon®

Fire Pump Motors

Model No: 449TSTFS14040
Catalog No: Y1641

Fire Pump Motor, 250 HP, 3 Ph, 60 Hz, 460 V, 1800 RPM, 447/449TS Frame, TEFC

©2026 Marathon, All Rights Reserved.

marathon®

Product Information Packet: Model No: 449TSTFS14040, Catalog No: Y1641 Fire Pump Motor, 250 HP, 3 Ph, 60 Hz, 460 V, 1800 RPM, 447/449TS Frame, TEFC

Nameplate Specifications

Phase	**3**	Output HP	**250 Hp**
Output KW	**187.0 kW**	Voltage	**460 V**
Speed	**1785 r/min**	Synchronous RPM	**1800 r/min**
Service Factor	**1.15**	Frame	**447/449TS**
Enclosure	**Totally Enclosed Fan Cooled**	Thermal Protection	**No Protection**
Efficiency	**95.4 %**	Ambient Temperature	**40 °C**
Frequency	**60 Hz**	Current	**285.0 A**
Power Factor	**86**	Duty	**Continuous**
Insulation Class	**F**	Design Code	**B**
KVA Code	**G**	Drive End Bearing Size	**6319**
Opp Drive End Bearing Size	**6319**	UL	**No**
CSA	**Y**	CE	**Y**
IP Code	**43**	Number of Speeds	**1**

Technical Specifications

Electrical Type	**Squirrel Cage Induction Run**	Starting Method	**Part Wdg Start & Wye Start Delta Run**
Poles	**4**	Rotation	**Reversible**
Resistance Main	**.0107 O**	Mounting	**Rigid Base**
Motor Orientation	**Horizontal**	Drive End Bearing	**Ball**
Opp Drive End Bearing	**Ball**	Frame Material	**Cast Iron**
Shaft Type	**TS**	Overall Length	**48.11 in**
Frame Length	**28.75 in**	Shaft Diameter	**2 3/8 in**
Shaft Extension	**5 in**	Assembly/Box Mounting	**F1/F2 Capable**

Drawings

Connection Drawing	**EE7300BH**	Outline Drawing	**SS559506-2875**

This is an uncontrolled document once printed or downloaded and is subject to change without notice. Date Created: 16/10/2026

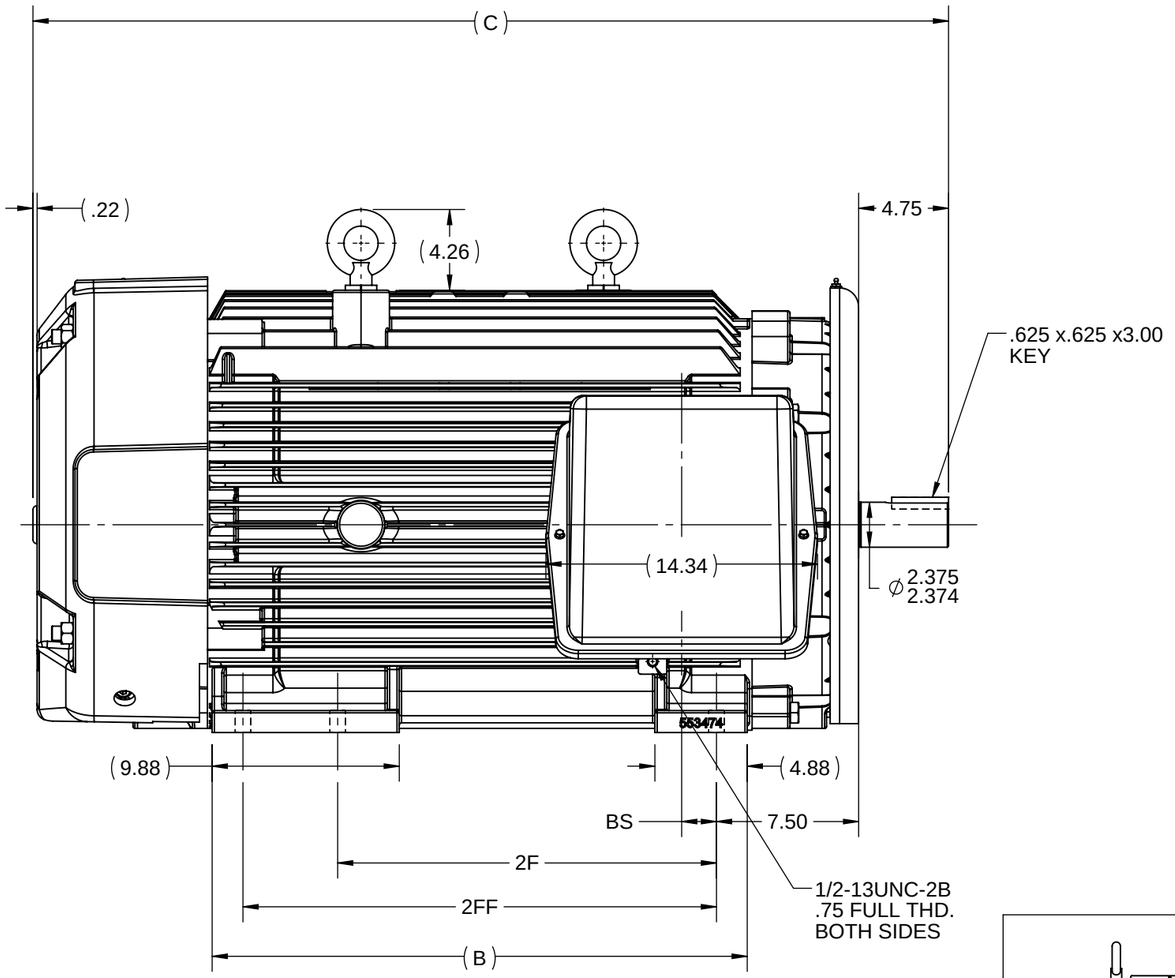

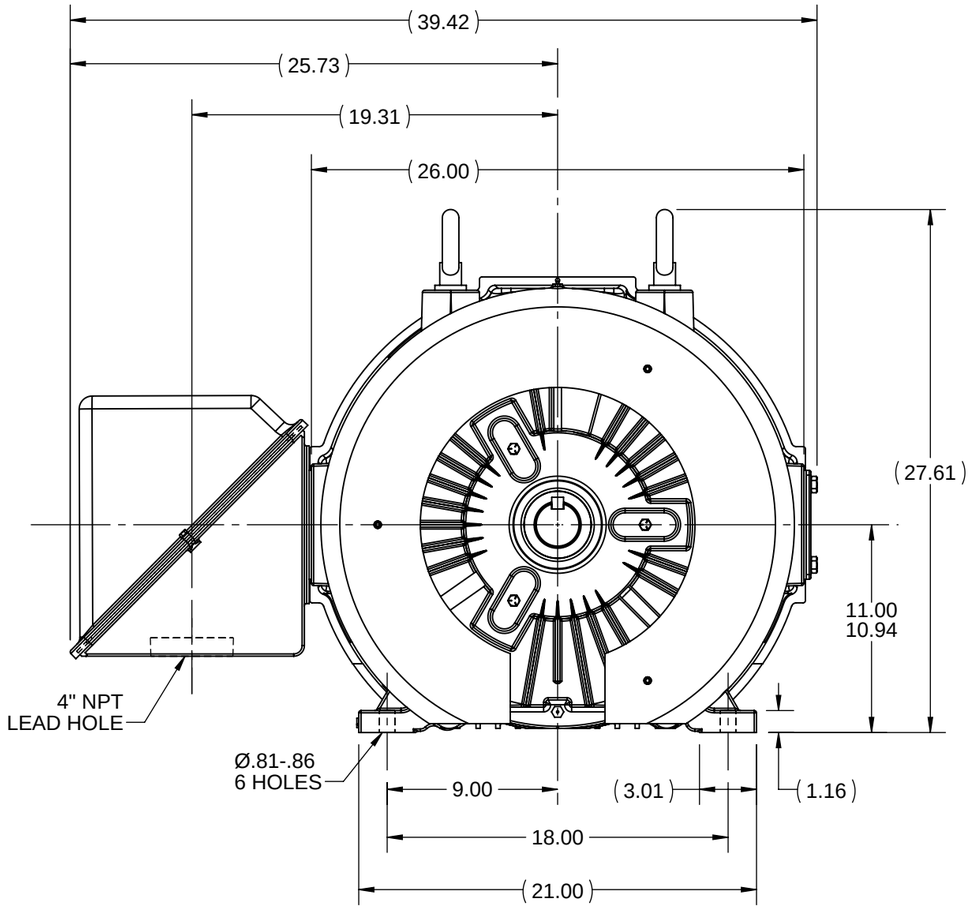

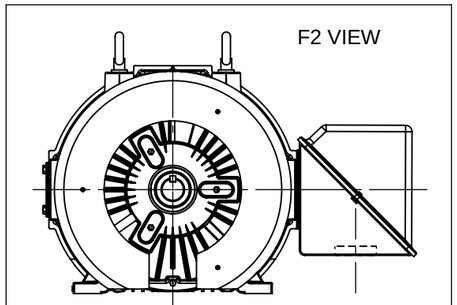

NOTES:

1. CONDUIT BOX CAN BE ROTATED IN 90° STEPS.
2. CONDUIT BOX CAN BE MOUNTED ON OPPOSITE SIDE.
3. NAMEPLATE TO BE READ FROM CONDUIT BOX SIDE OF MOTOR.

DASH	FRAME	C	B	2F	2FF	BS
2875	447/449TS	48.34	28.25	20.00	25.00	1.84

DRAWING REVISION: B	REVISION BY: MN	REV DATE/© DATE: 02/25/2026
REQUEST NUMBER: NMR-0239476	APPROVED BY: SR	DATE: 02/25/2026
REQUEST NUMBER DESCRIPTION: PBOM SIMPLIFICATION UPDATE		

COPYRIGHT (PER REVISION DATE) MARATHON ELECTRIC, LLC. ALL RIGHTS RESERVED. PROPRIETARY AND CONFIDENTIAL INFORMATION - THIS DOCUMENT IS THE PROPERTY OF MARATHON ELECTRIC, LLC. ("OWNER") AND CONTAINS OWNER'S PROPRIETARY INFORMATION. ANY PERSON, CORPORATION OR OTHER FIRM RECEIVING IT IS DEEMED, BY RECEIVING IT, TO AGREE THAT IT, AND/OR ANY PART OF IT, SHALL NOT BE DISCLOSED TO ANY PERSON, CORPORATION OR OTHER ENTITY, DUPLICATED, AND/OR USED, EXCEPT AS EXPRESSLY APPROVED IN WRITING IN ADVANCE BY OWNER. THIS DOCUMENT SHALL BE RETURNED TO OWNER UPON REQUEST. IT MAY BE SUBJECT TO CERTAIN RESTRICTIONS UNDER APPLICABLE EXPORT CONTROL LAWS AND REGULATIONS.

TOLERANCES (EXCEPT AS NOTED):

DEC.	INCH	mm	ANGLE
.X	±0.1	[±3]	±7' 30"
.XX	±0.03	[±0.8]	
.XXX	±0.005	[±0.13]	
.XXXX	±0.0005	[±0.013]	

REMOVE BURRS & BREAK SHARP EDGES: .003/.015 [.08/.38] X 45°
CORNER FILLETS: R.02 [.5]
MACHINED SURFACES: 200 INCH / 5.1 mm
mm DIMENSIONS IN [BRACKETS] ARE FOR REFERENCE ONLY

DRAWN BY: PD	
DATE: 09/03/2025	
APPROVED BY: V.LAXMIKANTH	
DATE: 09/03/2025	
REFERENCE: SS519815	
THIRD ANGLE PROJECTION	

marathon™

DESCRIPTION: OUTLINE
TEFC - 447/449TS FR. - STD

MATERIAL | PROCESS/FINISH

SIZE: B | DRAWING NUMBER: SS559506 | SHEET: 1 OF 1

Uncontrolled Copy

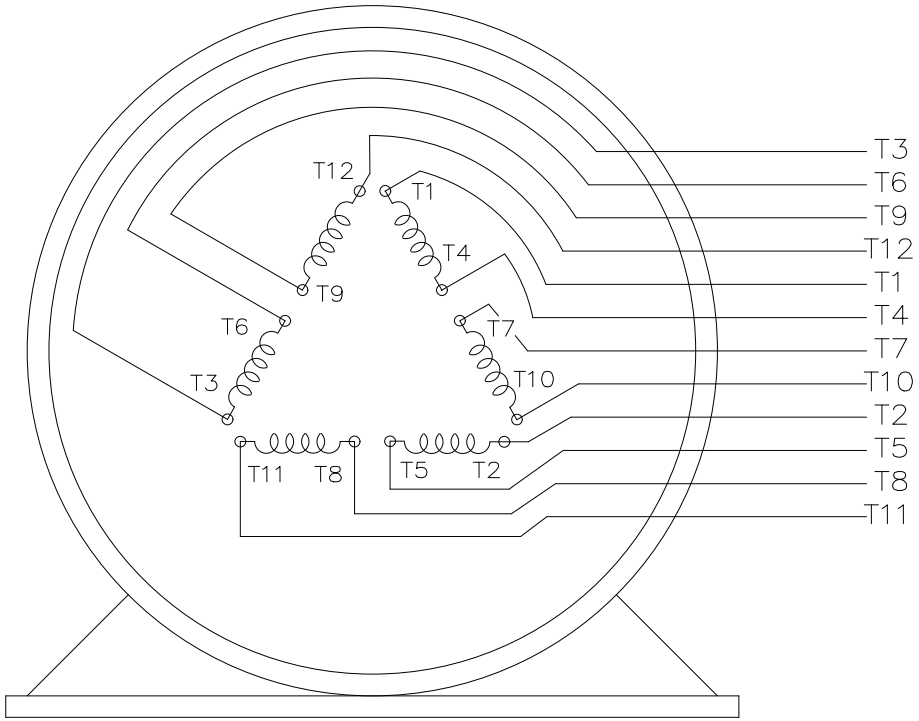

VIEW OF TERMINAL END

T12(W4)
T1(U1)
T6(W2)
T7(U3)
LINE 1

T2(V1)
T4(U2)
T8(V3)
T10(U4)
LINE 2

T3(W1)
T5(V2)
T9(W3)
T11(V4)
LINE 3

DRAWING REVISION: E	REVISION BY: SB	REV DATE/ © DATE: 08/04/2025
REQUEST NUMBER: CR-0023654	APPROVED BY: SBD	DATE: 08/04/2025
REQUEST NUMBER DESCRIPTION: DRAWING TITLE BLOCK UPDATED		

COPYRIGHT (PER REVISION DATE) MARATHON ELECTRIC, LLC. ALL RIGHTS RESERVED.
PROPRIETARY AND CONFIDENTIAL INFORMATION - THIS DOCUMENT IS THE PROPERTY OF MARATHON ELECTRIC, LLC. ("OWNER") AND CONTAINS OWNER'S PROPRIETARY INFORMATION. ANY PERSON, CORPORATION OR OTHER FIRM RECEIVING IT IS DEEMED, BY RECEIVING IT, TO AGREE THAT IT, AND/OR ANY PART OF IT, SHALL NOT BE DISCLOSED TO ANY PERSON, CORPORATION OR OTHER ENTITY, DUPLICATED, AND/OR USED, EXCEPT AS EXPRESSLY APPROVED IN WRITING IN ADVANCE BY OWNER. THIS DOCUMENT SHALL BE RETURNED TO OWNER UPON REQUEST. IT MAY BE SUBJECT TO CERTAIN RESTRICTIONS UNDER APPLICABLE EXPORT CONTROL LAWS AND REGULATIONS.

PRIMARY DIMENSIONS ARE INCH
mm DIMENSIONS IN [BRACKETS]
ARE FOR REFERENCE ONLY

DRAWN BY: RJW	marathon™	
DATE: 02/11/2005		
APPROVED BY: GK	DESCRIPTION: CONNECTION DIAGRAM 12 LEAD - SINGLE VOLTAGE	
DATE: 02/11/2005		
REFERENCE	MATERIAL	PROCESS/FINISH
THIRD ANGLE PROJECTION	SIZE: A / DRAWING NUMBER: EE7300BH	SHEET: 1 OF 1

Data Sheet

Date: 6/29/2017
Customer:
Attention:
Submitted by: FAREEDA DUDEKULA

marathon electric

449TSTFS14040

Submittal
Data @ 460 V

Motor Load Data

Load	0%	25%	50%	75%	100%	115%	125%	LR	
Current (Amps)	85.0	110	160	218	285	325	355	1,825	
Torque (ft-lb)	0.00	183	366	550	735	846	920	1,500	
RPM	1800	1795	1792	1790	1785	1,782	1780	0	
Efficiency (%)		89.5	93.6	95.0	95.4	95.4	95.0		
P.F. (%)	7.0	59.0	77.5	84.0	86.0	86.5	86.5	29.0	

Motor Speed Data

	LR	Pull-Up	BD	Rated	Idle
Speed (RPM)	0	900	1725	1785	1800
Current (Amps)	1,825	1,750	975	285	85.0
Torque (ft-lb)	1,500	1,300	1,775	735	0.00

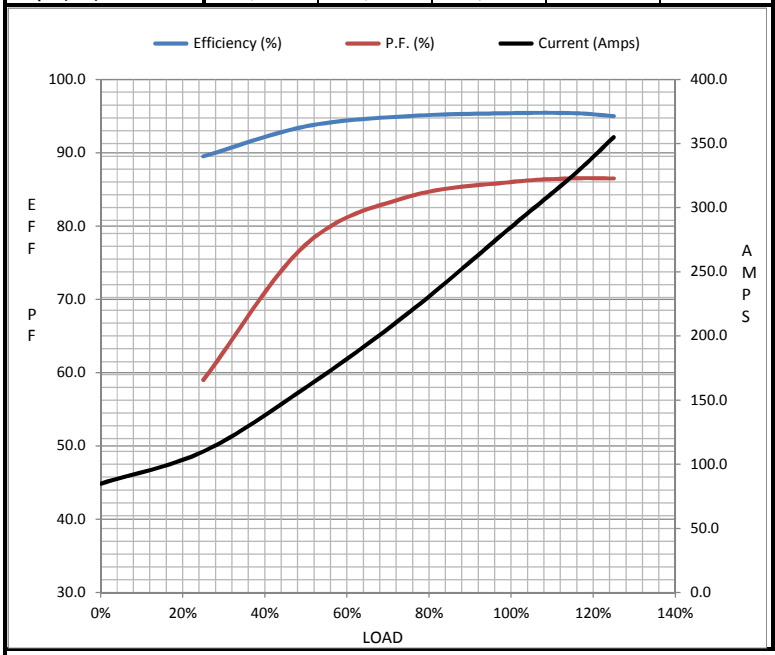

Information Block

HP	250.0	
Sync. RPM	1800	
Frame	449	
Enclosure	TEFC	
Construction	TFN	
Voltage	460	V
Frequency	60	Hz
Design	A	
LR Code letter	G	
Service Factor	1.15	
Temp Rise @ FL	70	° C
Duty	CONT	
Ambient	40	° C
Elevation	1,000	feet
Rotor/Shaft wk²	81.0	Lb-Ft²
Ref Wdg	T4494121 NONE	
Sound Pressure @ 1M	85	dBA
VFD Rating	NONE	
Outline Dwg	B-SS515643-2875	
Conn. Diag	A-EE7300BH	

Additional Specifications:
0
0

EQUIV CKT (OHMS / PHASE)

R1	R2	X1	X2	Xm
0.0090	0.0070	0.0920	0.1300	3.0740

Speed -Torque Curve

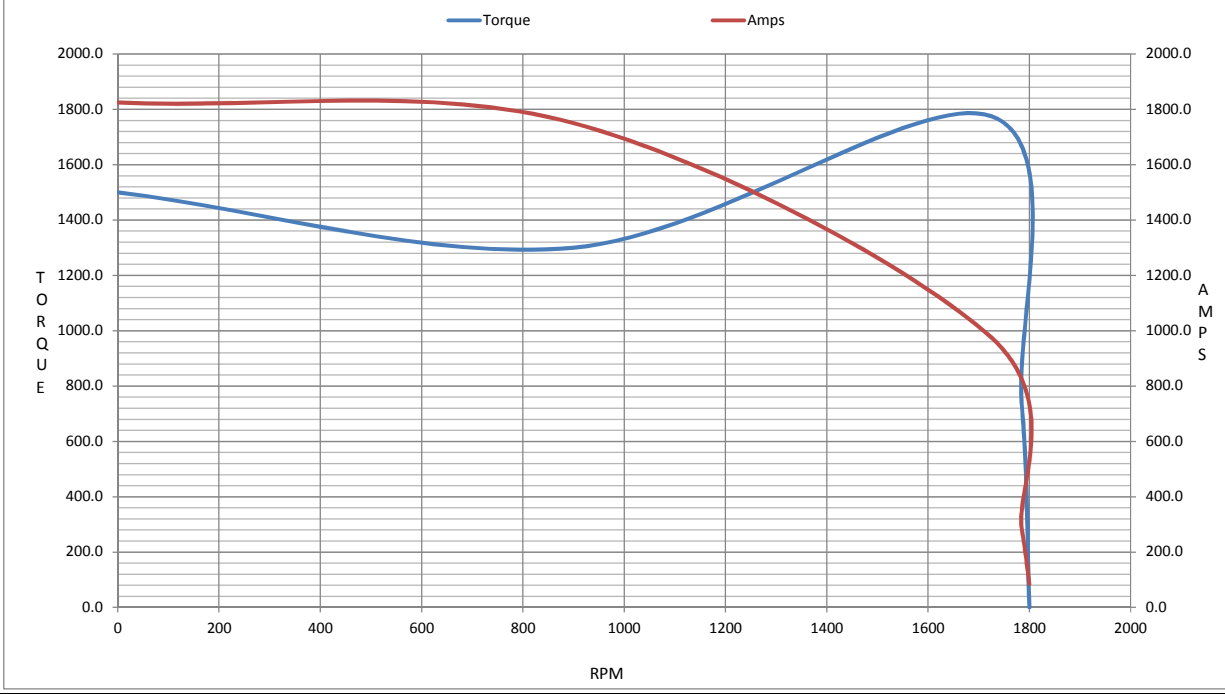

Uncontrolled Copy

CERTIFICATION DATA SHEET

Model#:	449TSTFS14040 AA	**WINDING#:**	T4494121 NONE 1
CONN. DIAGRAM:	A-EE7300BH	**ASSEMBLY:**	F1/F2 CAPABLE
OUTLINE:	B-SS515643-2875		

TYPICAL MOTOR PERFORMANCE DATA

HP	KW	SYNC. RPM	F.L. RPM	FRAME	ENCLOSURE	KVA CODE	DESIGN
250	187	1800	1785	447/449TS	TEFC	G	B

PH	Hz	VOLTS	FL AMPS	START TYPE	DUTY	INSL	S.F	AMB°C	ELEVATION
3	60	460	285	PWS & YDRUN	CONTINUOUS	F1	1.15	40	3300

FULL LOAD EFF: 95.4	3/4 LOAD EFF: 95	1/2 LOAD EFF: 93.6	GTD. EFF	ELEC. TYPE	NO LOAD AMPS
FULL LOAD PF: 86	3/4 LOAD PF: 84	1/2 LOAD PF: 77.5	94.5	SQ CAGE IND RUN	85

F.L. TORQUE	LOCKED ROTOR AMPS	L.R. TORQUE	B.D. TORQUE	F.L. RISE°C
735 LB-FT	1825	1500 LB-FT 204	1775 LB-FT 241	70

SOUND PRESSURE @ 3 FT.	SOUND POWER	ROTOR WK^2	MAX. WK^2	SAFE STALL TIME	STARTS /HOUR	APPROX. MOTOR WGT
85 dBA	95 dBA	81 LB-FT^2	1500 LB-FT^2	25 SEC.	1	2700 LBS.

*** SUPPLEMENTAL INFORMATION ***

DE BRACKET TYPE	ODE BRACKET TYPE	MOUNT TYPE	ORIENTATION	SEVERE DUTY	HAZARDOUS LOCATION	DRIP COVER	SCREENS	PAINT
STANDARD	STANDARD	RIGID	HORIZONTAL	FALSE	NONE	FALSE	NONE	RED (ENAMEL)

BEARINGS		GREASE	SHAFT TYPE	SPECIAL DE	SPECIAL ODE	SHAFT MATERIAL	FRAME MATERIAL
DE	OPE						
BALL 6318	BALL 6316	POLYREX EM	TS	NONE	NONE	1045 HOT ROLLED (C-204)	CAST IRON

THERMO-PROTECTORS				THERMISTORS	CONTROL	SPACE /n HEATERS
THERMOSTATS	PROTECTORS	WDG RTDs	BRG RTDs			
NONE	NOT	NONE	NONE	NONE	FALSE	NONE VOLTS

If Inverter equals NONE, contact factory for further information

INVERTER TORQUE: NONE
INV. HP SPEED RANGE: NONE

ENCODER: NONE
NONE NONE
NONE NONE PPR

BRAKE: NONE NONE
NONE P/N NONE
NONE NONE
- FT-LB NONE V NONE Hz

*
N
O
T
E
S
*

DATE: 06/21/2017 06:51:10 AM
FORM 3531 REV.3 02/07/99
** Subject to change without notice.