marathon®

Inverter (Vector) Duty Motors

Model No: 449THFCD8047
Catalog No: Y532A

Inverter (Vector) Duty Motor, 300 HP, 3 Ph, 60 Hz, 460 V, 1800 RPM, 449T Frame, TEBC-AXIAL

©2026 Marathon, All Rights Reserved.

marathon®

Product Information Packet: Model No: 449THFCD8047, Catalog No: Y532A Inverter (Vector) Duty Motor, 300 HP, 3 Ph, 60 Hz, 460 V, 1800 RPM, 449T Frame, TEBC-AXIAL

Nameplate Specifications

Phase	**3**	Output HP	**300 Hp**
Output KW	**224.0 kW**	Voltage	**460 V**
Speed	**1785 r/min**	Synchronous RPM	**1800 r/min**
Service Factor	**1.00**	Frame	**449T**
Enclosure	**Totally Enclosed Blower cooled - Axial**	Thermal Protection	**Thermostat**
Efficiency	**95.8 %**	Ambient Temperature	**40 °C**
Frequency	**60 Hz**	Current	**318.0 A**
Power Factor	**91.5**	Duty	**Continuous**
Insulation Class	**H**	Design Code	**INV**
KVA Code	**K**	Drive End Bearing Size	**6319**
Opp Drive End Bearing Size	**6317**	UL	**Recognized**
CSA	**Y**	CE	**Y**
IP Code	**55**	Number of Speeds	**1**

Technical Specifications

Electrical Type	**Squirrel Cage Inverter Duty**	Starting Method	**Inverter Only**
Poles	**4**	Rotation	**Reversible**
Resistance Main	**.0131 O**	Mounting	**Rigid Base**
Motor Orientation	**Horizontal**	Drive End Bearing	**Ball**
Opp Drive End Bearing	**Ball**	Frame Material	**Cast Iron**
Shaft Type	**T**	Shaft Diameter	**3.375 in**
Assembly/Box Mounting	**F1/F2 Capable**	Inverter Load	**Constant 2000:1**

Drawings

Connection Drawing	**EE7300T**	Outline Drawing	**SS621122**

This is an uncontrolled document once printed or downloaded and is subject to change without notice. Date Created: 16/10/2026

B	C	E	2E	2F	2FF	BA	BS	MOUNTING
30.94	62.30	9.00	18.00	20.00	25.00	7.50	13.48	F1 OR F2

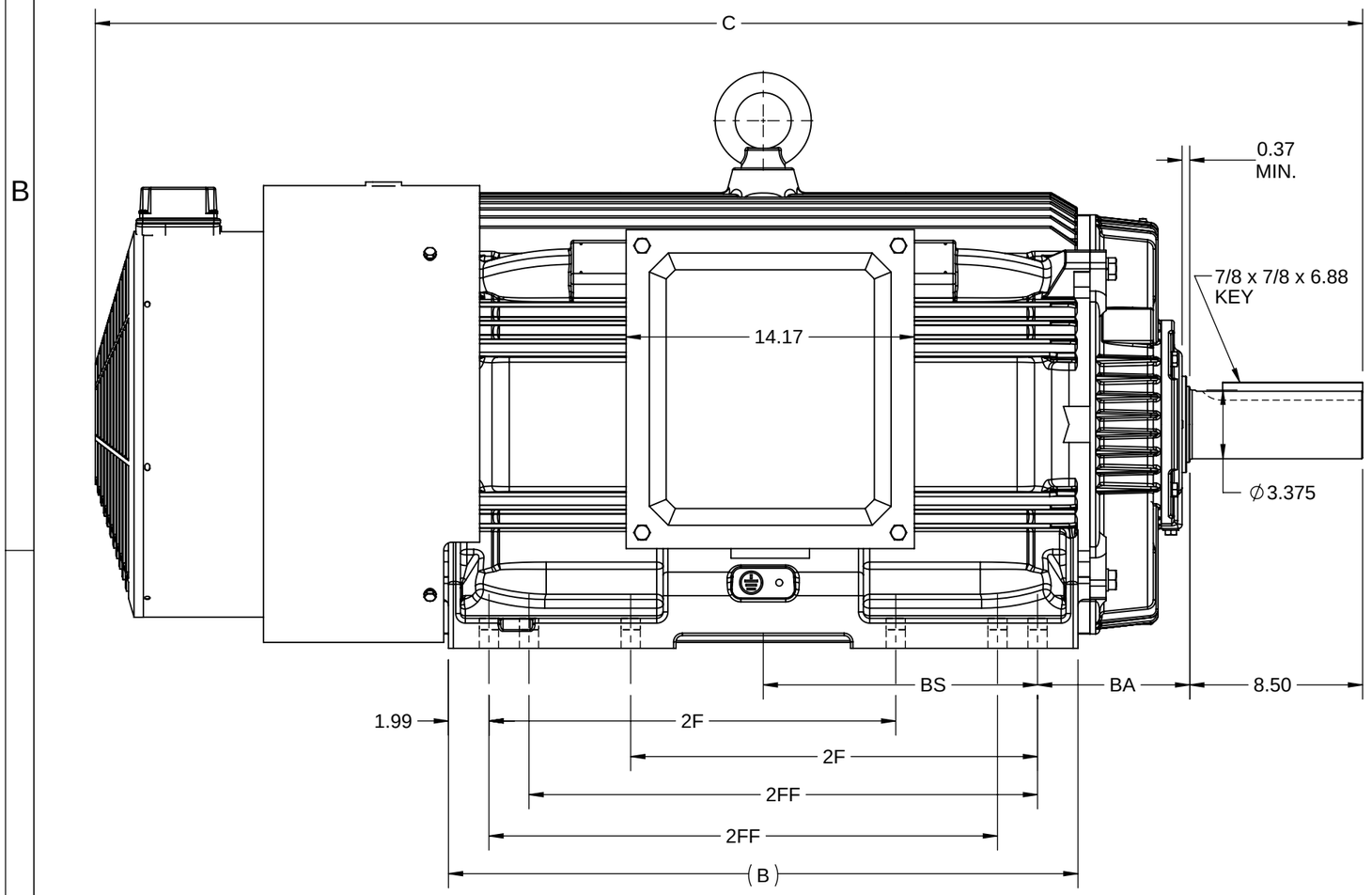

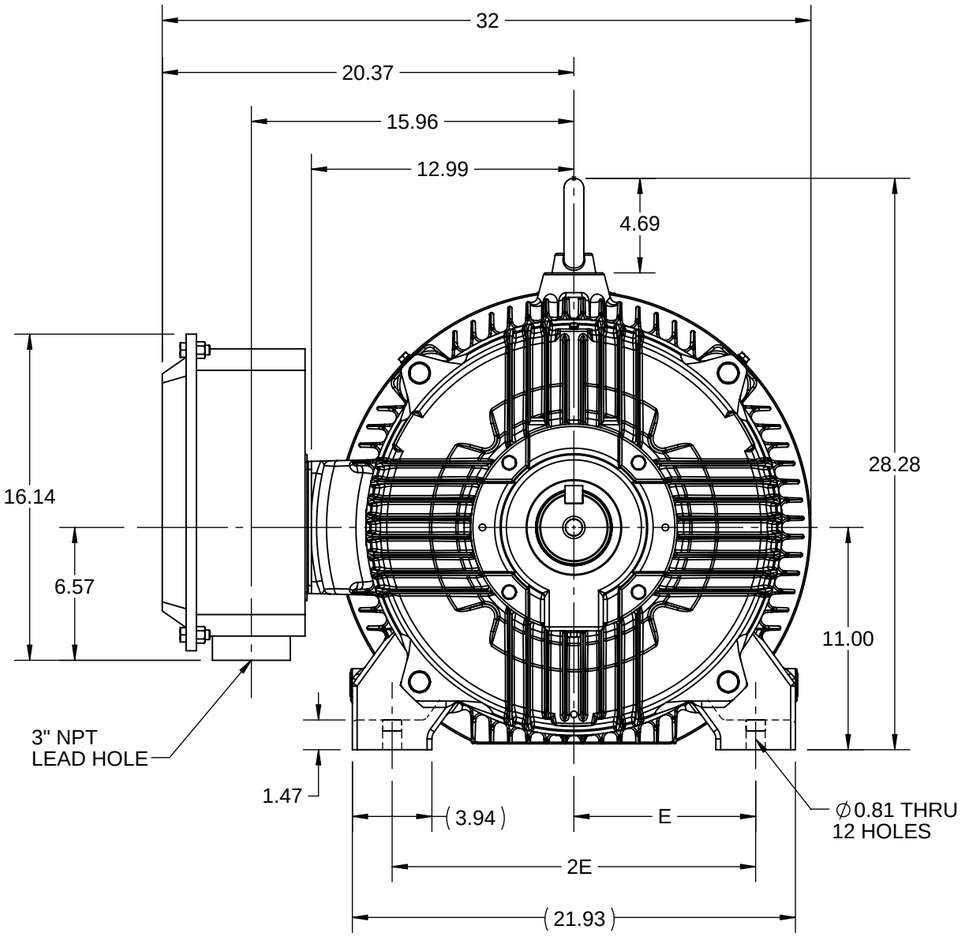

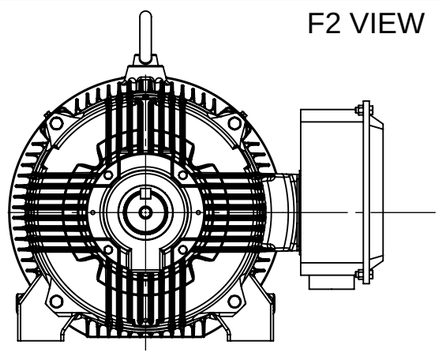

DRAWING REVISION	REVISION BY	REV DATE/© DATE
B	SKB	05/26/2026
REQUEST NUMBER	APPROVED BY	DATE
CR-0026396	RMS	05/26/2026

REQUEST NUMBER DESCRIPTION
DRAWING TITLE BLOCK UPDATED

COPYRIGHT (PER REVISION DATE) MARATHON ELECTRIC, LLC. ALL RIGHTS RESERVED. PROPRIETARY AND CONFIDENTIAL INFORMATION - THIS DOCUMENT IS THE PROPERTY OF MARATHON ELECTRIC, LLC. ("OWNER") AND CONTAINS OWNER'S PROPRIETARY INFORMATION. ANY PERSON, CORPORATION OR OTHER FIRM RECEIVING IT IS DEEMED, BY RECEIVING IT, TO AGREE THAT IT, AND/OR ANY PART OF IT, SHALL NOT BE DISCLOSED TO ANY PERSON, CORPORATION OR OTHER ENTITY, DUPLICATED, AND/OR USED, EXCEPT AS EXPRESSLY APPROVED IN WRITING IN ADVANCE BY OWNER. THIS DOCUMENT SHALL BE RETURNED TO OWNER UPON REQUEST. IT MAY BE SUBJECT TO CERTAIN RESTRICTIONS UNDER APPLICABLE EXPORT CONTROL LAWS AND REGULATIONS.

PRIMARY DIMENSIONS ARE INCH
mm DIMENSIONS IN [BRACKETS]
ARE FOR REFERENCE ONLY

DRAWN BY	DESCRIPTION
VR	OUTLINE
DATE: 04-03-2021	447/449T FR NEMA H/O-TEBC-AXIAL BLOWER
APPROVED BY: SBD	
DATE: 04-03-2021	
REFERENCE	MATERIAL / PROCESS/FINISH
THIRD ANGLE PROJECTION	SIZE: B / DRAWING NUMBER: SS621122 / SHEET: 1 OF 1

marathon™

THREE PHASE - SINGLE VOLTAGE
MOTOR - CONDUIT BOX @ 'A'

TO REVERSE ROTATION:
INTERCHANGE ANY TWO LINE
LEAD CONNECTIONS

NOTE FOR FACTORY USE ONLY:
TO SURGE TEST:
FOR 3 LEAD COMMON CONNECT:
CONNECT P1 TO T1 THEN P2 TO L1
FOR 6 LEAD COMMON CONNECT:
CONNECT P1 TO BOTH T1
THEN P2 TO L1

TERMINIAL BLOCK WHEN SPECIFIED

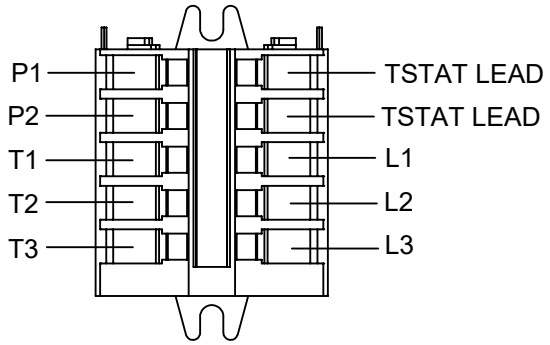

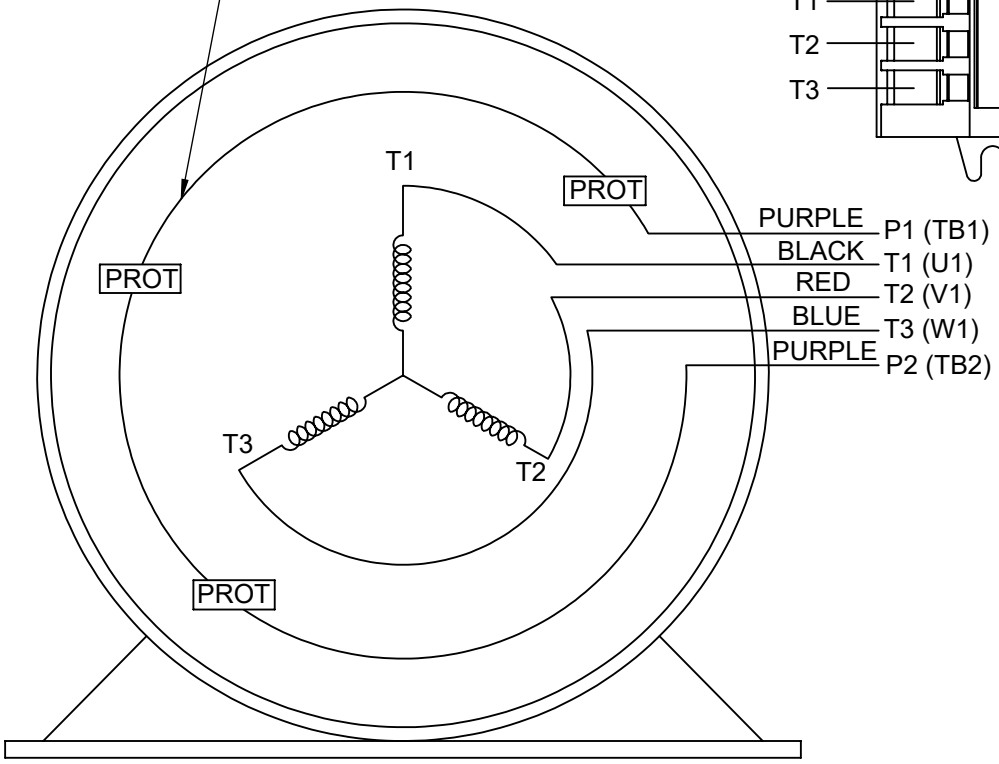

VIEW OF TERMINAL END

T2BM
T6AW
T6AL
T6Z
T4EG
T4BF
T8A
T6H
T6A
T4AX
T4A
T2A
T2F

IF MOTOR HAS MULTIPLE
T'S PER LEAD CONNECT
TOGETHER LIKE T'S

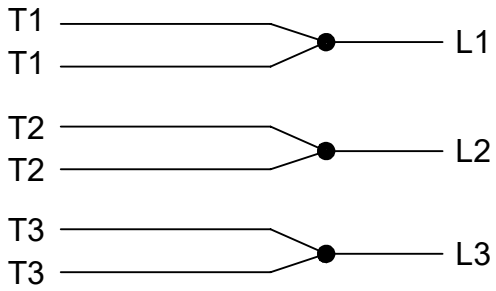

A-9806 DECAL

DRAWING REVISION AC	REVISION BY SB	REV DATE/© DATE 08/01/2025	PRIMARY DIMENSIONS ARE INCH mm DIMENSIONS IN [BRACKETS] ARE FOR REFERENCE ONLY	DRAWN BY LZ	marathon™
REQUEST NUMBER CR-0023654	APPROVED BY SBD	DATE 08/01/2025		DATE 01-04-1994	
REQUEST NUMBER DESCRIPTION DRAWING TITLE BLOCK UPDATED				APPROVED BY GK	DESCRIPTION CONN DIAGRAM-EXTERNAL 3Ø-SINGLE VOLT-MOTOR WITH PROTECTOR
				DATE 01-20-1994	
				REFERENCE	MATERIAL / PROCESS/FINISH
				THIRD ANGLE PROJECTION	SIZE A / DRAWING NUMBER EE7300T / SHEET 1 OF 1

COPYRIGHT (PER REVISION DATE) MARATHON ELECTRIC, LLC. ALL RIGHTS RESERVED. PROPRIETARY AND CONFIDENTIAL INFORMATION - THIS DOCUMENT IS THE PROPERTY OF MARATHON ELECTRIC, LLC. ("OWNER") AND CONTAINS OWNER'S PROPRIETARY INFORMATION. ANY PERSON, CORPORATION OR OTHER FIRM RECEIVING IT IS DEEMED, BY RECEIVING IT, TO AGREE THAT IT, AND/OR ANY PART OF IT, SHALL NOT BE DISCLOSED TO ANY PERSON, CORPORATION OR OTHER ENTITY, DUPLICATED, AND/OR USED, EXCEPT AS EXPRESSLY APPROVED IN WRITING IN ADVANCE BY OWNER. THIS DOCUMENT SHALL BE RETURNED TO OWNER UPON REQUEST. IT MAY BE SUBJECT TO CERTAIN RESTRICTIONS UNDER APPLICABLE EXPORT CONTROL LAWS AND REGULATIONS.

Data Sheet

Date: 11/17/2021

Customer:

Attention:

Submitted by:

marathon® Motors

449THFCD8047

Submittal

Data @ 460 V

Motor Load Data

Load	0%	25%	50%	75%	100%	115%	125%	LR	
Current (Amps)	81.5	113	173	243	318	365	397	3,021	
Torque (ft-lb)	0.00	219	439	659	881	1,013	1,103	2,164	
RPM	1800	1795	1795	1792	1785	1,785	1785	0	
Efficiency (%)		94.1	96.0	96.2	95.8	95.7	95.5		
P.F. (%)	4.5	66.0	84.5	90.0	91.5	92.0	92.0	33.5	

Motor Speed Data

	LR	Pull-Up	BD	Rated	Idle
Speed (RPM)	0	893	1710	1785	1800
Current (Amps)	3,021	2,719	1,580	318	81.5
Torque (ft-lb)	2,164	1,839	2,878	881	0.00

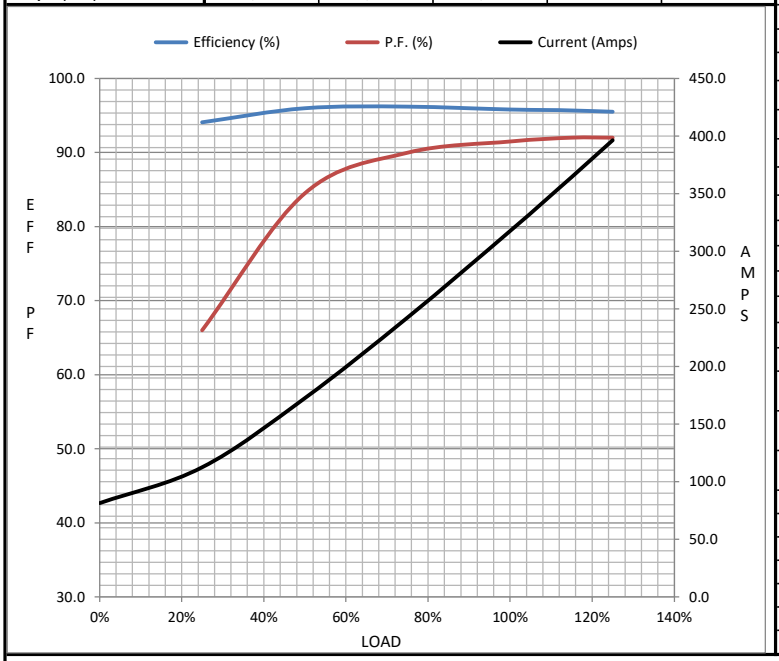

Information Block

HP	300.0	
Sync. RPM	1800	
Frame	449	
Enclosure	TEBC-AXIAL	
Construction	TFN	
Voltage	460	V
Frequency	60	Hz
Design	INV	
LR Code letter	K	
Service Factor	1.15	
Temp Rise @ FL	65	° C
Duty	CONT	
Ambient	40	° C
Elevation	3,300	feet
Rotor/Shaft wk²	115.45	Lb-Ft²
Ref Wdg	HA32804044 NONE	
Sound Pressure @ 1M	75	dBA
VFD Rating	CONSTANT 2000:1	
Outline Dwg	SS621122	
Conn. Diag	EE7300T	

Additional Specifications:

0

0

EQUIV CKT (OHMS / PHASE)

R1	R2	X1	X2	Xm
0.0080	0.0050	0.0580	0.0800	3.2000

Speed -Torque Curve

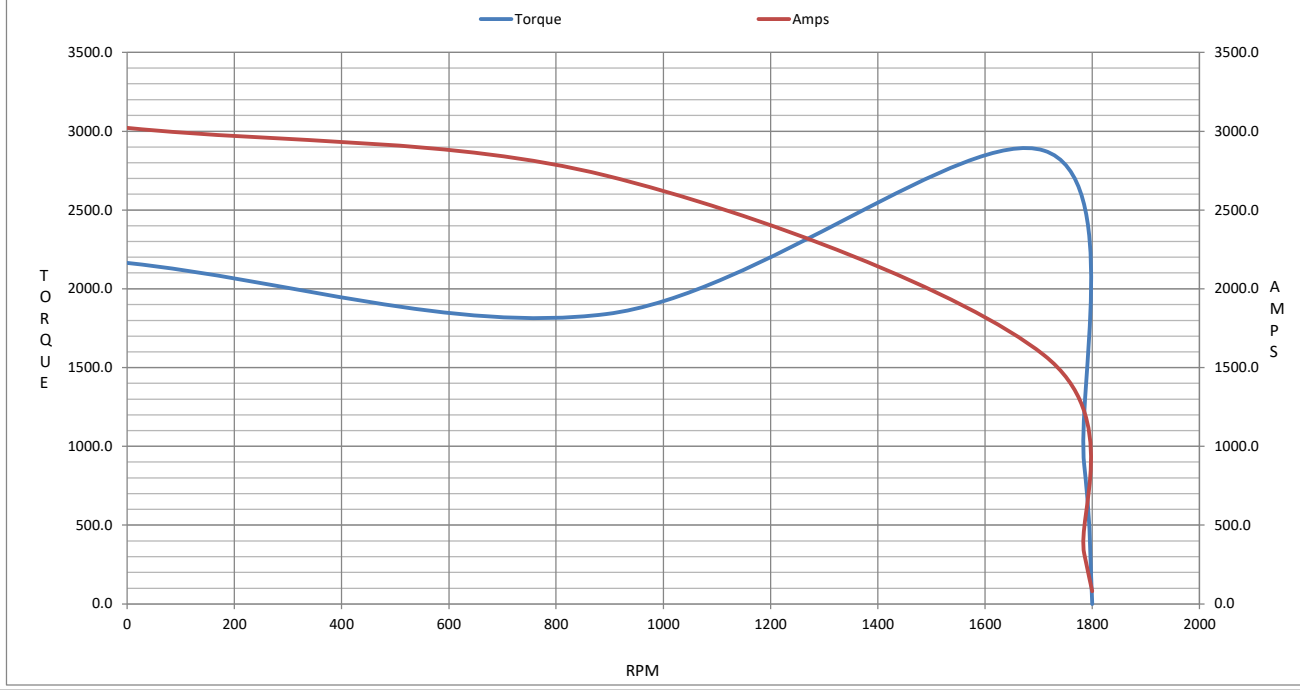

P.O. BOX 8003
WAUSAU, WI 54401-8003
PH. 715-675-3311

marathon® Motors

DATA VOLTS: 460

CERTIFICATION DATA SHEET

CUSTOMER:
ORDER #:
CONN. DIAGRAM: EE7300T
OUTLINE: SS621122
WINDING: HA32804044 NONE 1
SPEED:

CUSTOMER P.O. #:
REFERENCE MODEL #: 449THFCD8047
CAT #: Y532A
CUSTOMER PART #:
MOUNTING: F1/F2 CAPABLE

TYPICAL MOTOR PERFORMANCE DATA

HP	KW	SYNC RPM	FL RPM	FRAME	ENCLOSURE	TYPE	KVA CODE	DESIGN
300	224	1800	1785	447/449T	TEBC-AXIAL	TFN	K	INV

PH	HZ	VOLTS	AMPS	START TYPE	DUTY	INSL	S.F.	AMB	ELEV.
3	60	460	318	INVERTER ONLY	CONT	H	1.15	40	3300

F.L. EFF	95.8	3/4 LD EFF	96.2	1/2 LD EFF	96.0	GTD EFF	ELECT. TYPE
F.L. PF	91.5	3/4 LD PF	90.0	1/2 LD PF	84.5	95.4	SQ CAGE INV DUTY

F.L. TORQUE	LR AMPS @ 460 V	L.R. TORQUE	B.D. TORQUE	F.L. RISE (° C)	
881 LB-FT	3,021	2,164 LB-FT 246%	2,878 LB-FT 327%	65	

SOUND PRESSURE @ 3 FT.	SOUND POWER	ROTOR WK²	MAX. LOAD WK²	SAFE STALL TIME	STARTS/HOUR	APROX.	MOTOR WGT
75 dBA	84 dBA	115.45 LB-FT²	325 LB-FT²	29 SEC.	2	2766	LB.

*** SUPPLEMENTAL INFORMATION ***

DE BRACKET TYPE	ODE BRACKET TYPE	MOUNT TYPE	MOTOR ORIENTATION	SEVERE DUTY	HAZARDOUS LOCATION	DRIP COVER	SCREENS	PAINT
STANDARD	ENCODER	RIGID	HORIZONTAL	NO	NONE	NO	NONE	BLUE (ENAMEL)

BEARINGS DE	BEARINGS ODE	GREASE	SHAFT TYPE	SPECIAL DE	SPECIAL ODE	SHAFT MATERIAL	FRAME MATERIAL
BALL	BALL	POLYREX EM	T	NONE	NONE	1045 HOT ROLLED (C-204)	CAST IRON
6319	6317						

THERMOSTATS	PROTECTORS	WDG RTD's	BRG RTD's	THERMISTORS	CONTROL	SPACE HEATERS
TSTATS (N/C)	NOT	NONE	NONE	NONE	FALSE	NA

R1 (ohms/ph)	R2 (ohms/ph)	X1 (ohms/ph)	X2 (ohms/ph)	Xm (ohms/ph)	VIBRATION (in/sec)	FLOAT
0.008	0.005	0.058	0.08	3.2	0.150	ODE

* NOTES *

INVERTER TORQUE: CONSTANT 2000:1
INV. HP SPEED RANGE: 1.5 X BASE SPEED

ENCODER: NONE
NONE
NONE NONE **PPR**

BRAKE: NONE
NONE NONE
FT-LB: NA
VOLTAGE: NONE **HZ:**

PREPARED BY:
DATE: 11/17/2021

FORM: 3531 REV_4 2/27/06

UL: V-INS, CONST, OVERHEAT PRT DEV UL REC