marathon®

Fire Pump Motors

Model No: 445TSTFN14014
Catalog No: Y1637

Fire Pump Motor, 200 & 150 HP, 3 Ph, 60 & 50 Hz, 460 & 380 V, 3600 RPM, 445TS Frame, TEFC

©2026 Marathon, All Rights Reserved.

marathon®

Product Information Packet: Model No: 445TSTFN14014, Catalog No: Y1637 Fire Pump Motor, 200 & 150 HP, 3 Ph, 60 & 50 Hz, 460 & 380 V, 3600 RPM, 445TS Frame, TEFC

Nameplate Specifications

Phase	**3**	Output HP	**200 & 150 Hp**
Output KW	**149.0 & 112.0 kW**	Voltage	**460 & 380 V**
Speed	**3572 & 2975 r/min**	Synchronous RPM	**3600 & 3000 r/min**
Service Factor	**1.15 & 1.15**	Frame	**445TS**
Enclosure	**Totally Enclosed Fan Cooled**	Thermal Protection	**No Protection**
Efficiency	**95 & 94.5 %**	Ambient Temperature	**40 °C**
Frequency	**60 & 50 Hz**	Current	**220 & 205 A**
Power Factor	**88.5**	Duty	**Continuous**
Insulation Class	**F**	Design Code	**B**
KVA Code	**G**	Drive End Bearing Size	**6313**
Opp Drive End Bearing Size	**6313**	UL	**Listed**
CSA	**Y**	CE	**Y**
IP Code	**43**	Number of Speeds	**1**

Technical Specifications

Electrical Type	**Squirrel Cage Induction Run**	Starting Method	**Part Wdg Start & Wye Start Delta Run**
Poles	**2**	Rotation	**Reversible**
Resistance Main	**.014 O**	Mounting	**Rigid Base**
Motor Orientation	**Horizontal**	Drive End Bearing	**Ball**
Opp Drive End Bearing	**Ball**	Frame Material	**Cast Iron**
Shaft Type	**TS**	Overall Length	**39.6 in**
Frame Length	**20.25 in**	Shaft Diameter	**2 3/8 in**
Shaft Extension	**5 in**	Assembly/Box Mounting	**F1/F2 Capable**

Drawings

Connection Drawing	**EE7300BH**	Outline Drawing	**SS514022-2025**

This is an uncontrolled document once printed or downloaded and is subject to change without notice. Date Created: 16/10/2026

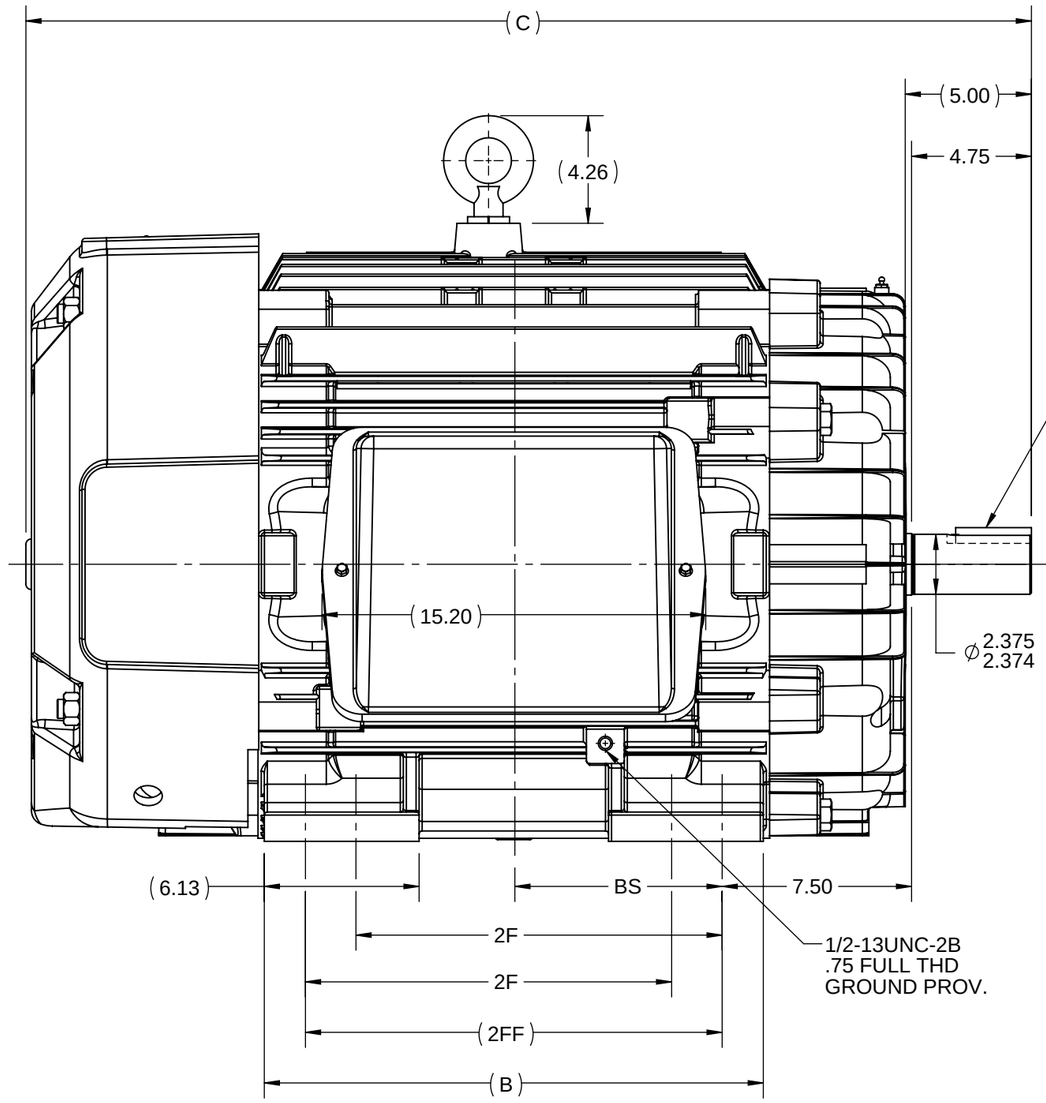

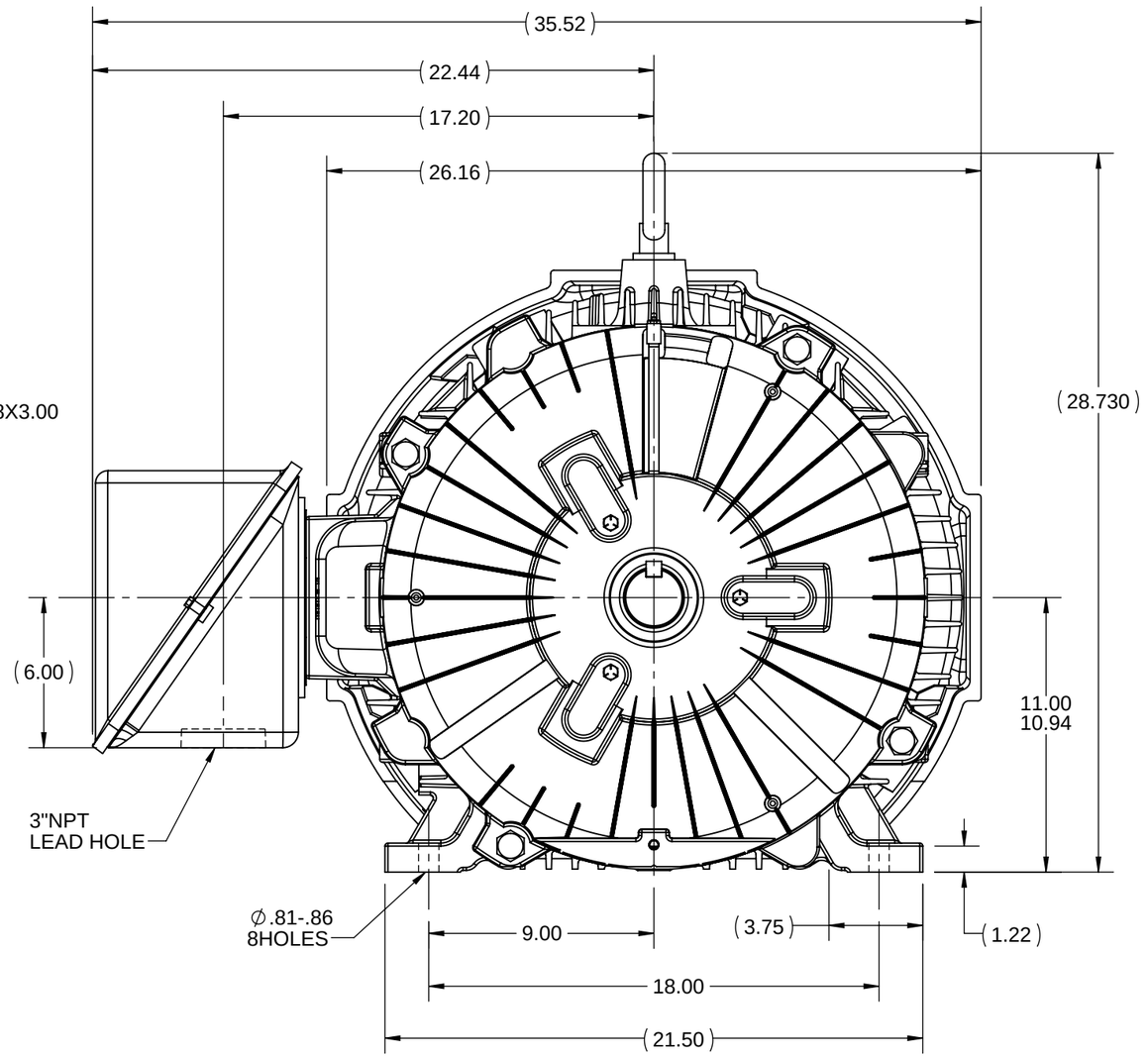

NOTES:

1. CONDUIT BOX CAN BE ROTATED IN 90° STEPS
2. CONDUIT BAX CAN BE MOUNTED ON OPPOSITE SIDE BY REMOVING BRACKETS AND TURNING FRAME 180°.
3. NAMEPLATES TO BE READ FROM CONDUIT BOX SIDE OF MOTOR.

DASH	FRAME	B	C	2F	2FF	BS
2025	444/445TS	19.75	39.81	14.50	16.50	8.25

DRAWING REVISION	REVISION BY	REV DATE/© DATE
D	SB	06/12/2026
REQUEST NUMBER	APPROVED BY	DATE
NMR-0240179	VG	06/12/2026
REQUEST NUMBER DESCRIPTION	P-BOM UPDATE	

COPYRIGHT (PER REVISION DATE) MARATHON ELECTRIC, LLC. ALL RIGHTS RESERVED. PROPRIETARY AND CONFIDENTIAL INFORMATION - THIS DOCUMENT IS THE PROPERTY OF MARATHON ELECTRIC, LLC. ("OWNER") AND CONTAINS OWNER'S PROPRIETARY INFORMATION. ANY PERSON, CORPORATION OR OTHER FIRM RECEIVING IT IS DEEMED, BY RECEIVING IT, TO AGREE THAT IT, AND/OR ANY PART OF IT, SHALL NOT BE DISCLOSED TO ANY PERSON, CORPORATION OR OTHER ENTITY, DUPLICATED, AND/OR USED, EXCEPT AS EXPRESSLY APPROVED IN WRITING IN ADVANCE BY OWNER. THIS DOCUMENT SHALL BE RETURNED TO OWNER UPON REQUEST. IT MAY BE SUBJECT TO CERTAIN RESTRICTIONS UNDER APPLICABLE EXPORT CONTROL LAWS AND REGULATIONS.

TOLERANCES (EXCEPT AS NOTED):

DEC.	INCH	mm	ANGLE
.X	±0.1	[±3]	±7' 30"
.XX	±0.03	[±0.8]	
.XXX	±0.005	[±0.13]	
.XXXX	±0.0005	[±0.013]	

REMOVE BURRS & BREAK SHARP
EDGES: .003/.015 [.08/.38] X 45°
CORNER FILLETS: R.02 [.5]
MACHINED SURFACES: 200 / 5.1 / INCH / mm
mm DIMENSIONS IN [BRACKETS] ARE FOR REFERENCE ONLY

DRAWN BY	RM
DATE	06-19-1991
APPROVED BY	ML
DATE	06-28-1991
REFERENCE	
THIRD ANGLE PROJECTION	

marathon™

DESCRIPTION
OUTLINE
444/445TS FR. - TEFC - TFN

MATERIAL | PROCESS/FINISH

SIZE B | DRAWING NUMBER SS514022 | SHEET 1 OF 1

Uncontrolled Copy

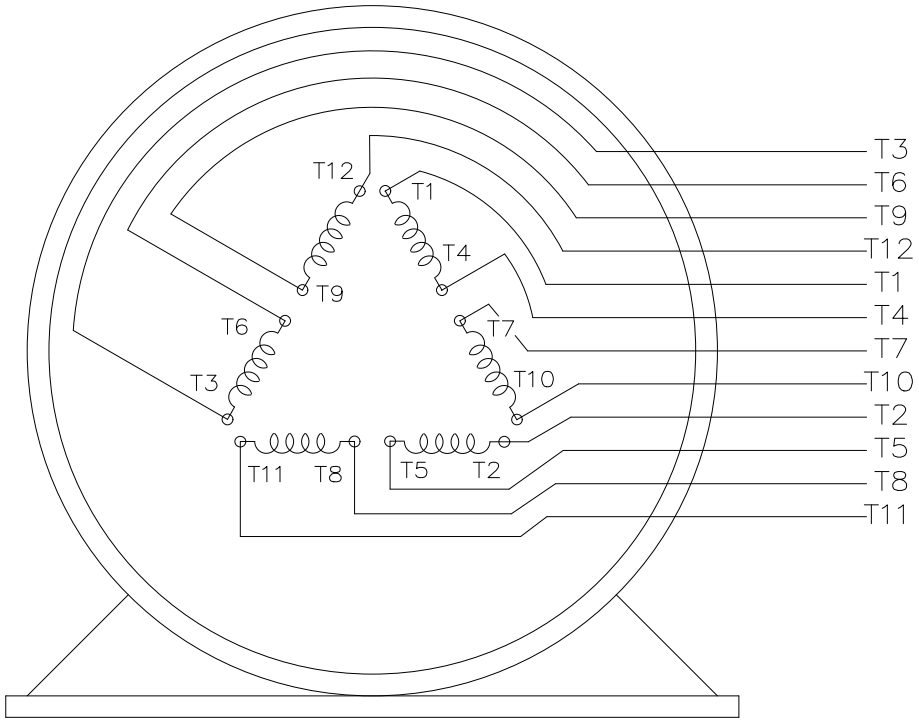

VIEW OF TERMINAL END

T12(W4)
T1(U1)
T6(W2)
T7(U3)
LINE 1

T2(V1)
T4(U2)
T8(V3)
T10(U4)
LINE 2

T3(W1)
T5(V2)
T9(W3)
T11(V4)
LINE 3

DRAWING REVISION: E	REVISION BY: SB	REV DATE/ © DATE: 08/04/2025
REQUEST NUMBER: CR-0023654	APPROVED BY: SBD	DATE: 08/04/2025
REQUEST NUMBER DESCRIPTION: DRAWING TITLE BLOCK UPDATED		

COPYRIGHT (PER REVISION DATE) MARATHON ELECTRIC, LLC. ALL RIGHTS RESERVED.
PROPRIETARY AND CONFIDENTIAL INFORMATION - THIS DOCUMENT IS THE PROPERTY OF MARATHON ELECTRIC, LLC. ("OWNER") AND CONTAINS OWNER'S PROPRIETARY INFORMATION. ANY PERSON, CORPORATION OR OTHER FIRM RECEIVING IT IS DEEMED, BY RECEIVING IT, TO AGREE THAT IT, AND/OR ANY PART OF IT, SHALL NOT BE DISCLOSED TO ANY PERSON, CORPORATION OR OTHER ENTITY, DUPLICATED, AND/OR USED, EXCEPT AS EXPRESSLY APPROVED IN WRITING IN ADVANCE BY OWNER. THIS DOCUMENT SHALL BE RETURNED TO OWNER UPON REQUEST. IT MAY BE SUBJECT TO CERTAIN RESTRICTIONS UNDER APPLICABLE EXPORT CONTROL LAWS AND REGULATIONS.

PRIMARY DIMENSIONS ARE INCH
mm DIMENSIONS IN [BRACKETS]
ARE FOR REFERENCE ONLY

DRAWN BY: RJW	marathon™	
DATE: 02/11/2005		
APPROVED BY: GK	DESCRIPTION: CONNECTION DIAGRAM 12 LEAD - SINGLE VOLTAGE	
DATE: 02/11/2005		
REFERENCE	MATERIAL	PROCESS/FINISH
THIRD ANGLE PROJECTION	SIZE: A / DRAWING NUMBER: EE7300BH	SHEET: 1 OF 1

Data Sheet

Date: 6/29/2017
Customer:
Attention:
Submitted by: FAREEDA DUDEKULA

marathon® electric

445TSTFN14014

Submittal

Data @ 460 V

Motor Load Data

Load	0%	25%	50%	75%	100%	115%	125%	LR	
Current (Amps)	60.0	82.0	123	170	220	252	275	1,400	
Torque (ft-lb)	0.00	73.0	146	220	294	338	368	425	
RPM	3600	3592	3588	3580	3572	3,568	3565	0	
Efficiency (%)		88.5	93.0	94.5	95.0	95.0	94.5		
P.F. (%)	9.0	64.0	81.0	87.0	88.5	89.0	89.0	24.0	

Motor Speed Data

	LR	Pull-Up	BD	Rated	Idle
Speed (RPM)	0	1800	3450	3572	3600
Current (Amps)	1,400	1,300	850	220	60.0
Torque (ft-lb)	425	350	775	294	0.00

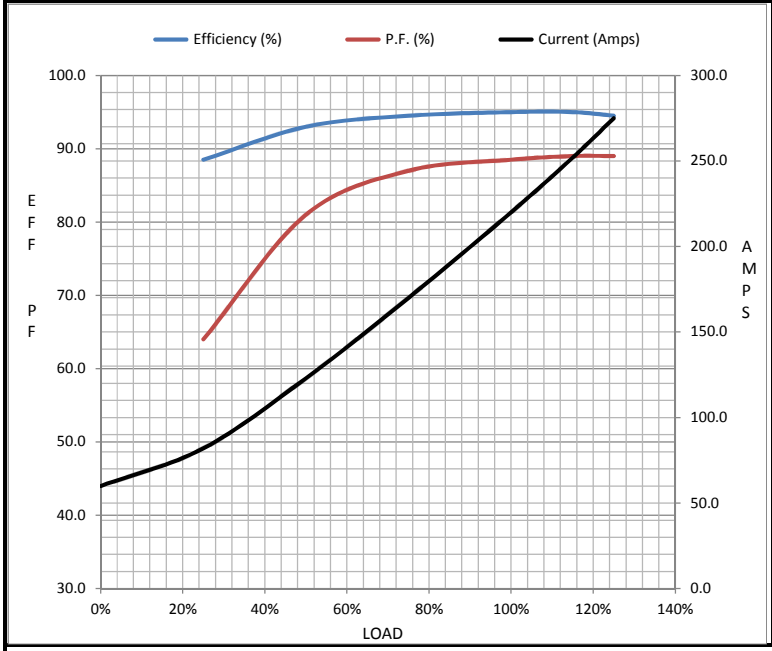

Information Block

HP	200.0
Sync. RPM	3600
Frame	445
Enclosure	TEFC
Construction	TFN
Voltage	460#380 V
Frequency	60 Hz
Design	A
LR Code letter	G
Service Factor	1.15
Temp Rise @ FL	75 ° C
Duty	CONT
Ambient	40 ° C
Elevation	1,000 feet
Rotor/Shaft wk²	32.0 Lb-Ft²
Ref Wdg	T445296 NONE
Sound Pressure @ 1M	82 dBA
VFD Rating	NONE
Outline Dwg	B-SS514023-2025
Conn. Diag	A-EE7300BH
Additional Specifications:	
0	
0	

EQUIV CKT (OHMS / PHASE)

R1	R2	X1	X2	Xm
0.0110	0.0090	0.1330	0.0990	4.3450

Speed -Torque Curve

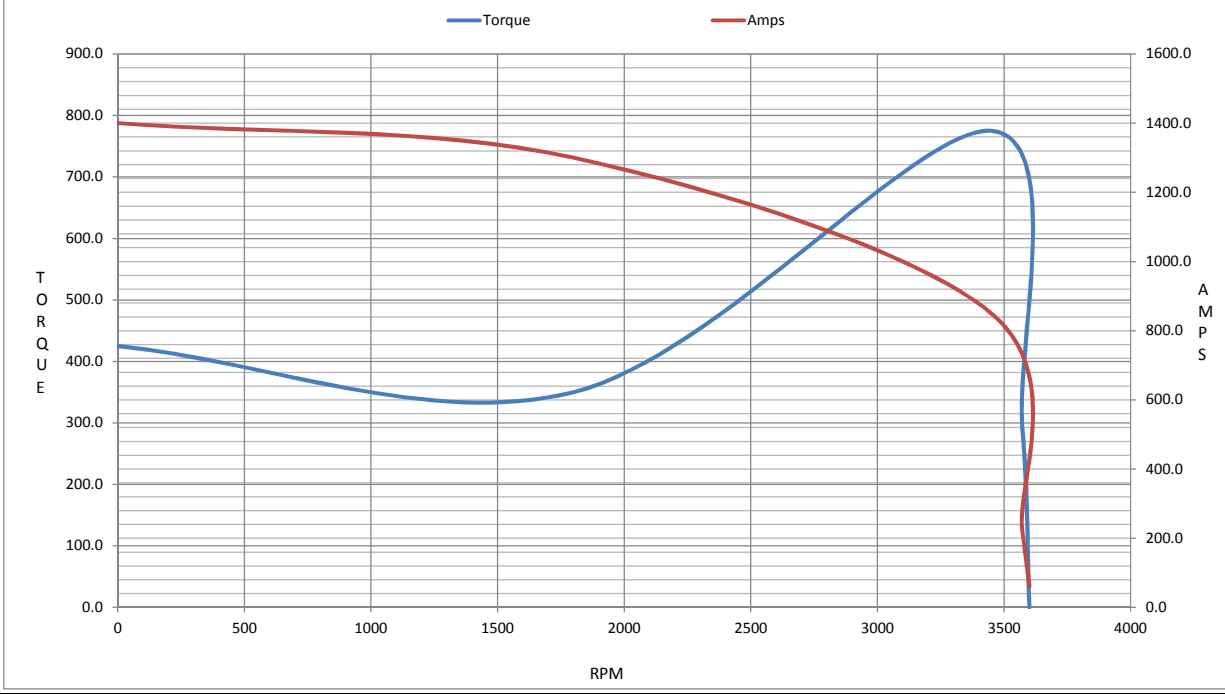

Uncontrolled Copy

CERTIFICATION DATA SHEET

Model#:	445TSTFN14014 AA	**WINDING#:**	T445296 NONE 1
CONN. DIAGRAM:	A-EE7300BH	**ASSEMBLY:**	F1/F2 CAPABLE
OUTLINE:	B-SS514023-2025		

TYPICAL MOTOR PERFORMANCE DATA

HP	KW	SYNC. RPM	F.L. RPM	FRAME	ENCLOSURE	KVA CODE	DESIGN
200&150	149&112	3600	3572&2975	445TS	TEFC	G	B

PH	Hz	VOLTS	FL AMPS	START TYPE	DUTY	INSL	S.F	AMB°C	ELEVATION
3	60/50	460#380	220&205	PWS & YDRUN	CONTINUOUS	F1	1.15/1.15	40	3300

FULL LOAD EFF: 95&94.5	3/4 LOAD EFF: 94.5	1/2 LOAD EFF: 93	GTD. EFF	ELEC. TYPE	NO LOAD AMPS
FULL LOAD PF: 88.5&88	3/4 LOAD PF: 87	1/2 LOAD PF: 81	94.1	SQ CAGE IND RUN	60

F.L. TORQUE	LOCKED ROTOR AMPS	L.R. TORQUE	B.D. TORQUE	F.L. RISE°C
294 LB-FT	1400	425 LB-FT 145	775 LB-FT 264	75

SOUND PRESSURE @ 3 FT.	SOUND POWER	ROTOR WK^2	MAX. WK^2	SAFE STALL TIME	STARTS /HOUR	APPROX. MOTOR WGT
82 dBA	92 dBA	32 LB-FT^2	160 LB-FT^2	15 SEC.	2	2250 LBS.

*** SUPPLEMENTAL INFORMATION ***

DE BRACKET TYPE	ODE BRACKET TYPE	MOUNT TYPE	ORIENTATION	SEVERE DUTY	HAZARDOUS LOCATION	DRIP COVER	SCREENS	PAINT
STANDARD	STANDARD	RIGID	HORIZONTAL	FALSE	NONE	FALSE	NONE	RED (ENAMEL)

BEARINGS		GREASE	SHAFT TYPE	SPECIAL DE	SPECIAL ODE	SHAFT MATERIAL	FRAME MATERIAL
DE	OPE						
BALL 6313	BALL 6313	POLYREX EM	TS	NONE	NONE	1045 HOT ROLLED (C-204)	CAST IRON

THERMO-PROTECTORS				THERMISTORS	CONTROL	SPACE /n HEATERS
THERMOSTATS	PROTECTORS	WDG RTDs	BRG RTDs			
NONE	NOT	NONE	NONE	NONE	FALSE	NONE VOLTS

If Inverter equals NONE, contact factory for further information

INVERTER TORQUE: NONE
INV. HP SPEED RANGE: NONE

ENCODER: NONE
NONE NONE
NONE NONE PPR

BRAKE: NONE NONE
NONE P/N NONE
NONE NONE
- FT-LB NONE V NONE Hz

* NOTES *

DATE: 06/21/2017 05:26:10 AM
FORM 3531 REV.3 02/07/99
** Subject to change without notice.