marathon®

Fire Pump Motors

Model No: 445TSTDCD4028
Catalog No: U1437

Fire Pump Motor, 200 HP, 3 Ph, 50 Hz, 415 V, 1500 RPM, 445TS Frame, DP

©2026 Marathon, All Rights Reserved.

marathon®

Product Information Packet: Model No: 445TSTDCD4028, Catalog No: U1437 Fire Pump Motor, 200 HP, 3 Ph, 50 Hz, 415 V, 1500 RPM, 445TS Frame, DP

Nameplate Specifications

Phase	**3**	Output HP	**200 Hp**
Output KW	**149.0 kW**	Voltage	**415 V**
Speed	**1488 r/min**	Synchronous RPM	**1500 r/min**
Service Factor	**1.15**	Frame	**445TS**
Enclosure	**Drip Proof**	Thermal Protection	**No Protection**
Efficiency	**94.5 %**	Ambient Temperature	**50 °C**
Frequency	**50 Hz**	Current	**249.0 A**
Power Factor	**87.5**	Duty	**Continuous**
Insulation Class	**F**	Design Code	**B**
KVA Code	**G**	Drive End Bearing Size	**6319**
Opp Drive End Bearing Size	**6317**	UL	**Listed**
CSA	**Y**	CE	**Y**
IP Code	**23**	Number of Speeds	**1**

Technical Specifications

Electrical Type	**Squirrel Cage Induction Run**	Starting Method	**Part Wdg Start & Wye Start Delta Run**
Poles	**4**	Rotation	**Reversible**
Resistance Main	**.0325 O**	Mounting	**Rigid Base**
Motor Orientation	**Horizontal**	Drive End Bearing	**Ball**
Opp Drive End Bearing	**Ball**	Frame Material	**Cast Iron**
Shaft Type	**TS**	Shaft Diameter	**2.375 in**
Assembly/Box Mounting	**F1/F2 Capable**		

Drawings

Connection Drawing	**EE7300BH**	Outline Drawing	**SS620991**

This is an uncontrolled document once printed or downloaded and is subject to change without notice. Date Created: 14/10/2026

B	C	E	2E	2F	2FF	BA	BS	MOUNTING
18.98	36.47	9.00	18.00	14.50	16.50	7.50	8.25	F1 OR F2

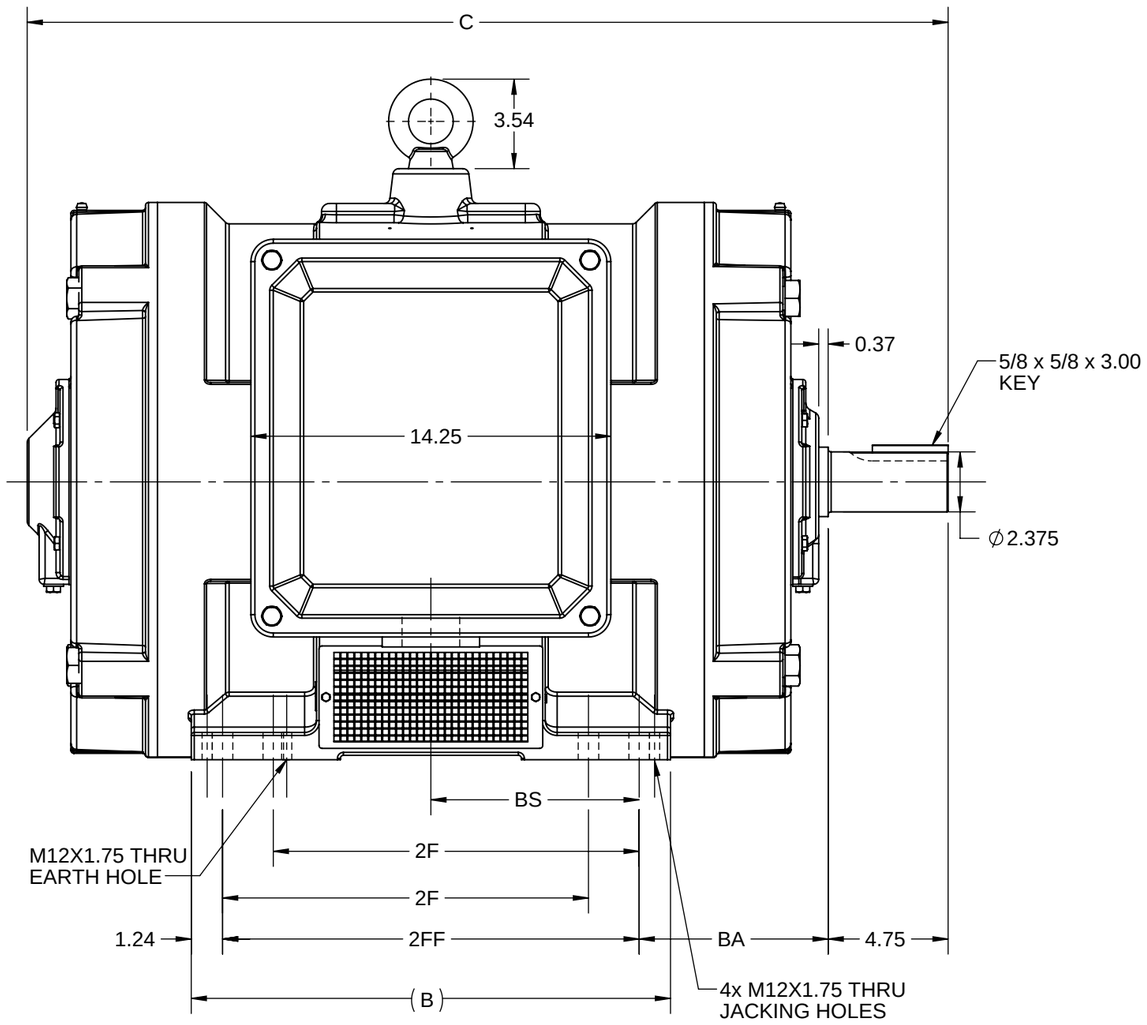

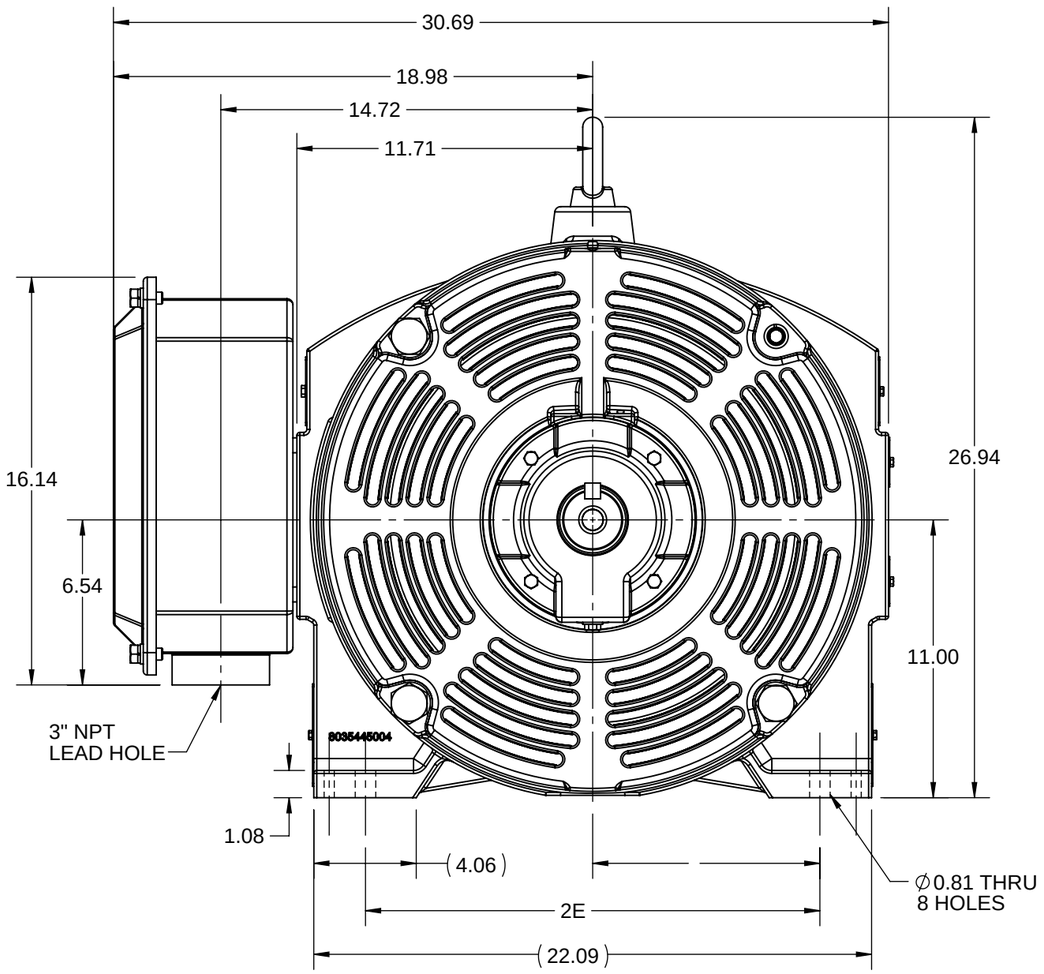

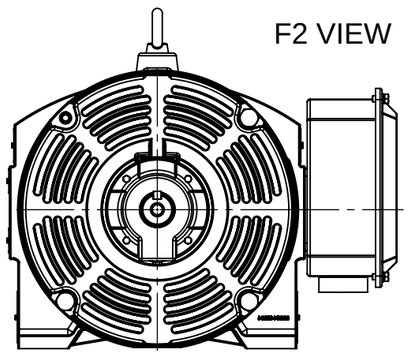

DRAWING REVISION C	REVISION BY SB	REV DATE/© DATE 05/27/2026
REQUEST NUMBER CR-0026396	APPROVED BY RMS	DATE 05/27/2026
REQUEST NUMBER DESCRIPTION: DRAWING TITLE BLOCK UPDATED		

COPYRIGHT (PER REVISION DATE) MARATHON ELECTRIC, LLC. ALL RIGHTS RESERVED. PROPRIETARY AND CONFIDENTIAL INFORMATION - THIS DOCUMENT IS THE PROPERTY OF MARATHON ELECTRIC, LLC. ("OWNER") AND CONTAINS OWNER'S PROPRIETARY INFORMATION. ANY PERSON, CORPORATION OR OTHER FIRM RECEIVING IT IS DEEMED, BY RECEIVING IT, TO AGREE THAT IT, AND/OR ANY PART OF IT, SHALL NOT BE DISCLOSED TO ANY PERSON, CORPORATION OR OTHER ENTITY, DUPLICATED, AND/OR USED, EXCEPT AS EXPRESSLY APPROVED IN WRITING IN ADVANCE BY OWNER. THIS DOCUMENT SHALL BE RETURNED TO OWNER UPON REQUEST. IT MAY BE SUBJECT TO CERTAIN RESTRICTIONS UNDER APPLICABLE EXPORT CONTROL LAWS AND REGULATIONS.

PRIMARY DIMENSIONS ARE INCH
mm DIMENSIONS IN [BRACKETS]
ARE FOR REFERENCE ONLY

DRAWN BY VS	marathon™		
DATE 11/01/2019	DESCRIPTION: OUTLINE, 444/445 FR TS-NEMA-ODP		
APPROVED BY SBD			
DATE 11/01/2019			
REFERENCE	MATERIAL	PROCESS/FINISH	
THIRD ANGLE PROJECTION	SIZE B	DRAWING NUMBER SS620991	SHEET 1 OF 1