marathon®

Fire Pump Motors

Model No: 445TSTDCD14027
Catalog No: U540B

Fire Pump Motor, 250 & 200 HP, 3 Ph, 60 & 50 Hz, 460 & 380 V, 1800 RPM, 445TS Frame, DP

©2026 Marathon, All Rights Reserved.

marathon®

Product Information Packet: Model No: 445TSTDCD14027, Catalog No: U540B Fire Pump Motor, 250 & 200 HP, 3 Ph, 60 & 50 Hz, 460 & 380 V, 1800 RPM, 445TS Frame, DP

Nameplate Specifications

Phase	**3**	Output HP	**250 & 200 Hp**
Output KW	**187.0 & 149.0 kW**	Voltage	**460 & 380 V**
Speed	**1789 & 1489 r/min**	Synchronous RPM	**1800 & 1500 r/min**
Service Factor	**1.15 & 1.15**	Frame	**445TS**
Enclosure	**Drip Proof**	Thermal Protection	**No Protection**
Efficiency	**95.4 & 95.1 %**	Ambient Temperature	**50 °C**
Frequency	**60 & 50 Hz**	Current	**279 & 270 A**
Power Factor	**87.7**	Duty	**Continuous**
Insulation Class	**F**	Design Code	**B**
KVA Code	**G**	Drive End Bearing Size	**6319**
Opp Drive End Bearing Size	**6317**	UL	**Listed**
CSA	**Y**	CE	**Y**
IP Code	**23**	Number of Speeds	**1**

Technical Specifications

Electrical Type	**Squirrel Cage Induction Run**	Starting Method	**Part Wdg Start & Wye Start Delta Run**
Poles	**4**	Rotation	**Reversible**
Resistance Main	**.0223 O**	Mounting	**Rigid Base**
Motor Orientation	**Horizontal**	Drive End Bearing	**Ball**
Opp Drive End Bearing	**Ball**	Frame Material	**Cast Iron**
Shaft Type	**TS**	Shaft Diameter	**2.375 in**
Assembly/Box Mounting	**F1/F2 Capable**		

Drawings

Connection Drawing	**EE7300BH**	Outline Drawing	**SS620991**

This is an uncontrolled document once printed or downloaded and is subject to change without notice. Date Created: 16/10/2026

B	C	E	2E	2F	2FF	BA	BS	MOUNTING
18.98	36.47	9.00	18.00	14.50	16.50	7.50	8.25	F1 OR F2

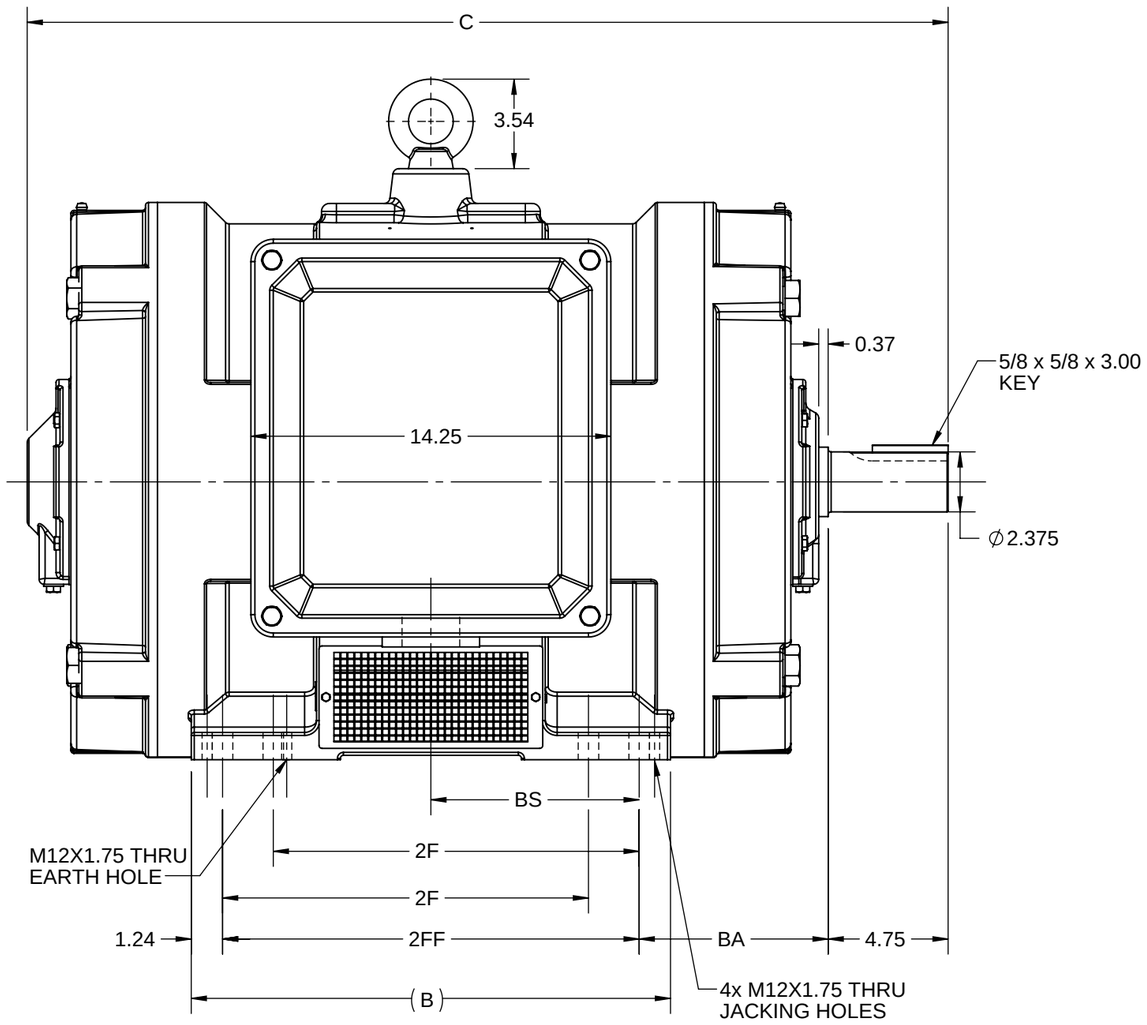

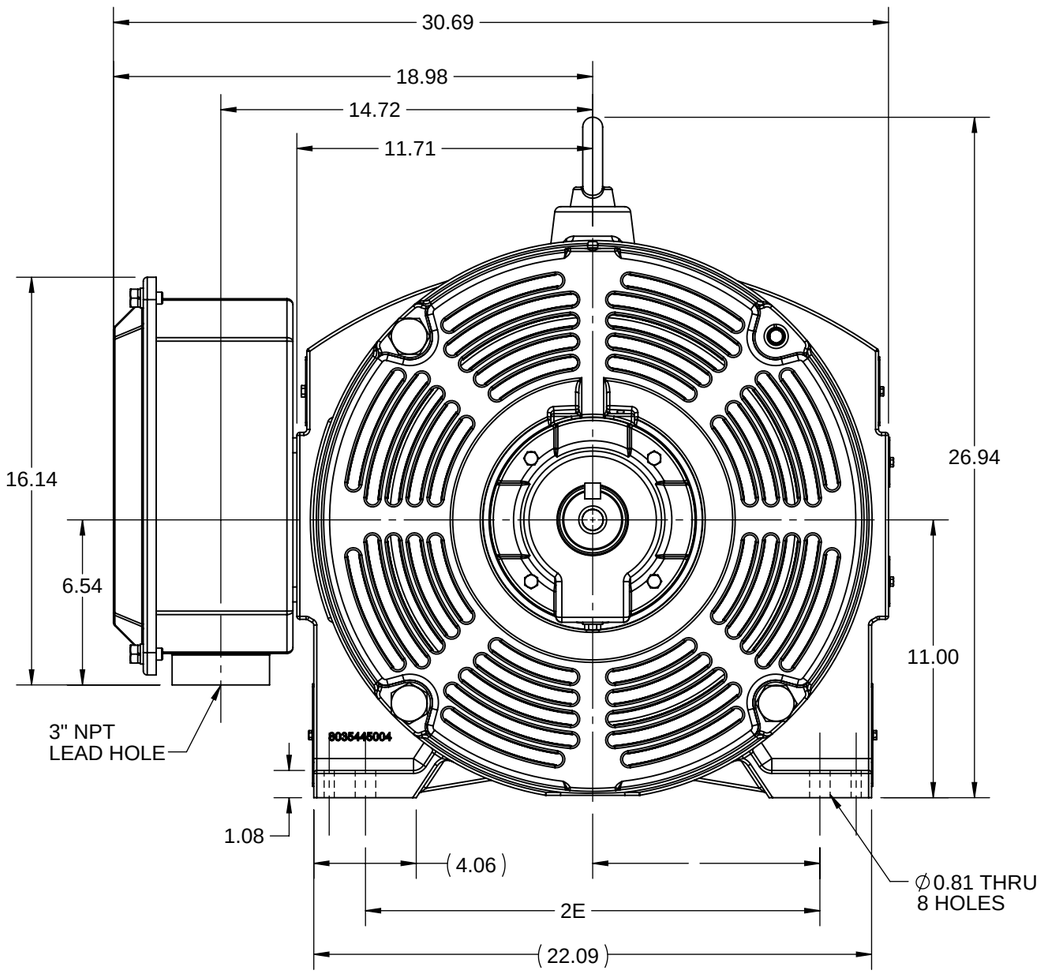

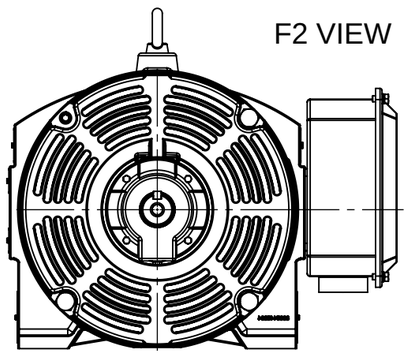

DRAWING REVISION: C	REVISION BY: SB	REV DATE/© DATE: 05/27/2026
REQUEST NUMBER: CR-0026396	APPROVED BY: RMS	DATE: 05/27/2026
REQUEST NUMBER DESCRIPTION: DRAWING TITLE BLOCK UPDATED		

COPYRIGHT (PER REVISION DATE) MARATHON ELECTRIC, LLC. ALL RIGHTS RESERVED. PROPRIETARY AND CONFIDENTIAL INFORMATION - THIS DOCUMENT IS THE PROPERTY OF MARATHON ELECTRIC, LLC. ("OWNER") AND CONTAINS OWNER'S PROPRIETARY INFORMATION. ANY PERSON, CORPORATION OR OTHER FIRM RECEIVING IT IS DEEMED, BY RECEIVING IT, TO AGREE THAT IT, AND/OR ANY PART OF IT, SHALL NOT BE DISCLOSED TO ANY PERSON, CORPORATION OR OTHER ENTITY, DUPLICATED, AND/OR USED, EXCEPT AS EXPRESSLY APPROVED IN WRITING IN ADVANCE BY OWNER. THIS DOCUMENT SHALL BE RETURNED TO OWNER UPON REQUEST. IT MAY BE SUBJECT TO CERTAIN RESTRICTIONS UNDER APPLICABLE EXPORT CONTROL LAWS AND REGULATIONS.

PRIMARY DIMENSIONS ARE INCH
mm DIMENSIONS IN [BRACKETS]
ARE FOR REFERENCE ONLY

DRAWN BY: VS		marathon™
DATE: 11/01/2019		DESCRIPTION: OUTLINE 444/445 FR TS-NEMA-ODP
APPROVED BY: SBD		
DATE: 11/01/2019		
REFERENCE	MATERIAL	PROCESS/FINISH
THIRD ANGLE PROJECTION	SIZE: B	DRAWING NUMBER: SS620991 — SHEET: 1 OF 1

Uncontrolled Copy

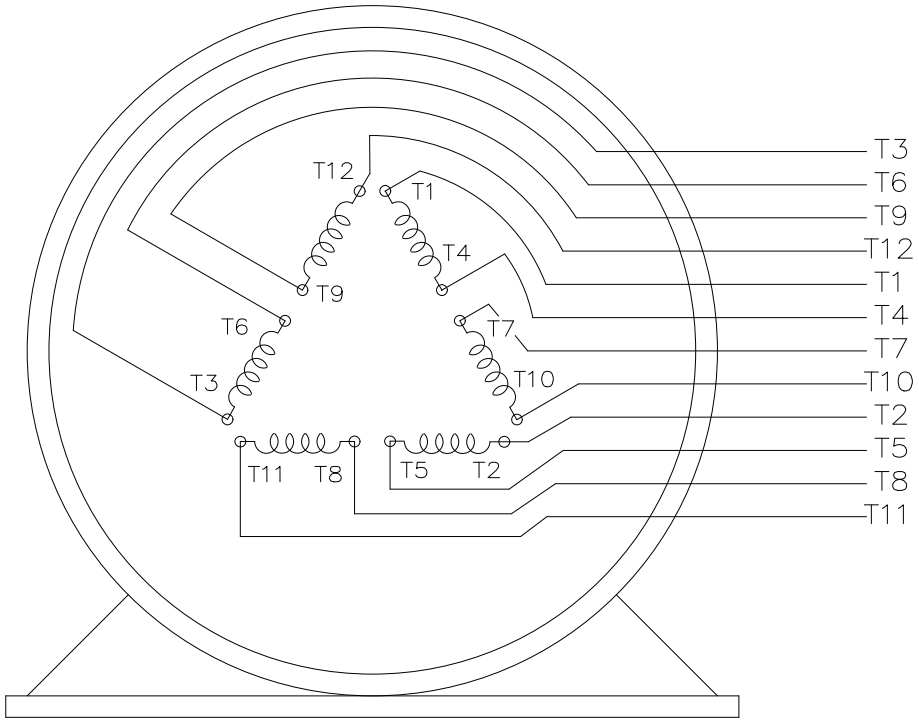

VIEW OF TERMINAL END

T12(W4)
T1(U1)
T6(W2)
T7(U3)
LINE 1

T2(V1)
T4(U2)
T8(V3)
T10(U4)
LINE 2

T3(W1)
T5(V2)
T9(W3)
T11(V4)
LINE 3

DRAWING REVISION: E	REVISION BY: SB	REV DATE/ © DATE: 08/04/2025
REQUEST NUMBER: CR-0023654	APPROVED BY: SBD	DATE: 08/04/2025
REQUEST NUMBER DESCRIPTION: DRAWING TITLE BLOCK UPDATED		

COPYRIGHT (PER REVISION DATE) MARATHON ELECTRIC, LLC. ALL RIGHTS RESERVED.
PROPRIETARY AND CONFIDENTIAL INFORMATION - THIS DOCUMENT IS THE PROPERTY OF MARATHON ELECTRIC, LLC. ("OWNER") AND CONTAINS OWNER'S PROPRIETARY INFORMATION. ANY PERSON, CORPORATION OR OTHER FIRM RECEIVING IT IS DEEMED, BY RECEIVING IT, TO AGREE THAT IT, AND/OR ANY PART OF IT, SHALL NOT BE DISCLOSED TO ANY PERSON, CORPORATION OR OTHER ENTITY, DUPLICATED, AND/OR USED, EXCEPT AS EXPRESSLY APPROVED IN WRITING IN ADVANCE BY OWNER. THIS DOCUMENT SHALL BE RETURNED TO OWNER UPON REQUEST. IT MAY BE SUBJECT TO CERTAIN RESTRICTIONS UNDER APPLICABLE EXPORT CONTROL LAWS AND REGULATIONS.

PRIMARY DIMENSIONS ARE INCH
mm DIMENSIONS IN [BRACKETS]
ARE FOR REFERENCE ONLY

DRAWN BY: RJW	marathon™	
DATE: 02/11/2005		
APPROVED BY: GK	DESCRIPTION: CONNECTION DIAGRAM 12 LEAD - SINGLE VOLTAGE	
DATE: 02/11/2005		
REFERENCE	MATERIAL	PROCESS/FINISH
THIRD ANGLE PROJECTION	SIZE: A / DRAWING NUMBER: EE7300BH	SHEET: 1 OF 1

Data Sheet

Date: 10/4/2023
Customer:
Attention:
Submitted by: RAMYA

marathon® Motors

445TSTDCD14027

Submittal

Data @ 460 V

Motor Load Data

Load	0%	25%	50%	75%	100%	115%	125%	LR	
Current (Amps)	80.0	104	153	213	279	321	351	1,825	
Torque (ft-lb)	0.00	183	366	550	734	845	920	1,915	
RPM	1800	1797	1795	1792	1789	1,786	1785	0	
Efficiency (%)		93.1	95.4	95.7	95.4	95.1	94.8		
P.F. (%)	4.9	60.4	79.9	85.8	87.7	87.8	87.6	43.0	

Motor Speed Data

	LR	Pull-Up	BD	Rated	Idle
Speed (RPM)	0	900	1745	1789	1800
Current (Amps)	1,825	1,450	918	279	80.0
Torque (ft-lb)	1,915	1,580	1,650	734	0.00

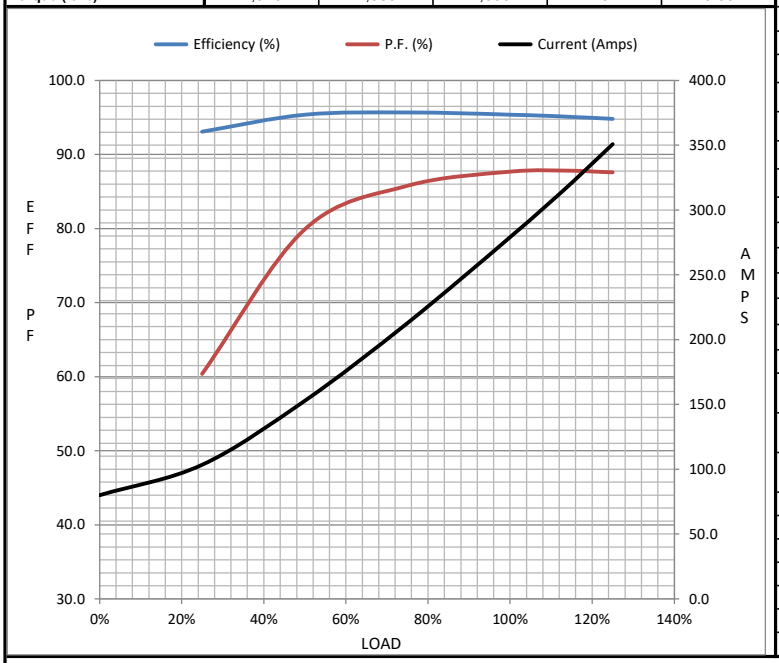

Information Block

HP	250.0	
Sync. RPM	1800	
Frame	445	
Enclosure	DP	
Construction	TDC	
Voltage	460#380	V
Frequency	60	Hz
Design	B	
LR Code letter	G	
Service Factor	1.15	
Temp Rise @ FL	75	° C
Duty	CONT	
Ambient	50	° C
Elevation	3,300	feet
Rotor/Shaft wk²	75.0	Lb-Ft²
Ref Wdg	HA22804105 NONE	
Sound Pressure @ 1M	84	dBA
VFD Rating	NONE	
Outline Dwg	SS620991	
Conn. Diag	EE7300BH	

Additional Specifications:

0

0

EQUIV CKT (OHMS / PHASE)

R1	R2	X1	X2	Xm
0.0140	0.0060	0.0690	0.1600	3.3910

Speed -Torque Curve

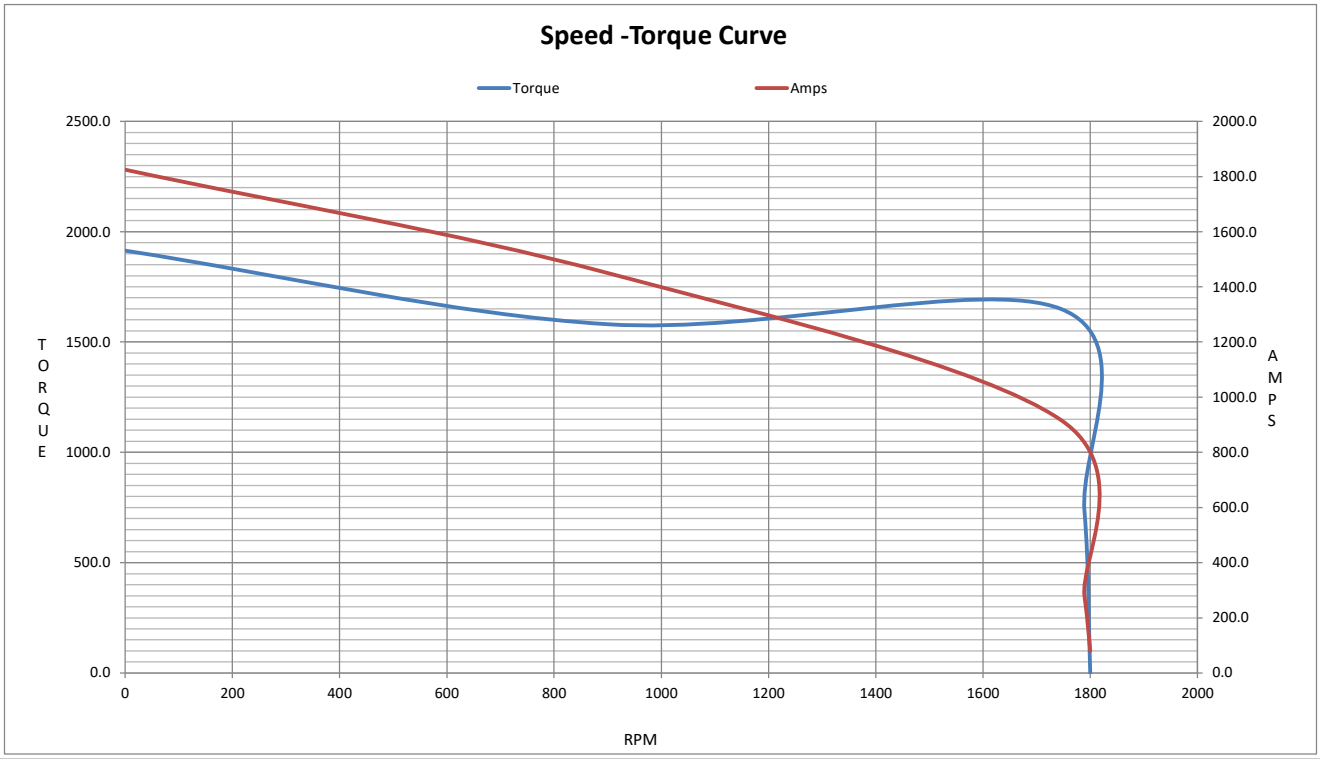

P.O. BOX 8003
WAUSAU, WI 54401-8003
PH. 715-675-3311

DATA VOLTS: 460

CERTIFICATION DATA SHEET

CUSTOMER:
ORDER #:
CONN. DIAGRAM: EE7300BH
OUTLINE: SS620991
WINDING: HA22804105 NONE 1
SPEED:

CUSTOMER P.O. #:
REFERENCE MODEL #: 445TSTDCD14027
CAT #: U540B
CUSTOMER PART #:
MOUNTING: F1/F2 CAPABLE
FAN: 504205B

TYPICAL MOTOR PERFORMANCE DATA

HP	KW	SYNC RPM	FL RPM	FRAME	ENCLOSURE	TYPE	KVA CODE	DESIGN
250	187	1800	1789	445TS	DP	TDC	G	B

PH	HZ	VOLTS	AMPS	START TYPE	DUTY	INSL	S.F.	AMB	ELEV.
3	60/50	460#380	279&270	PWS & YDRUN	CONT	F	1.15	50	3300

F.L. EFF	95.4	3/4 LD EFF	95.7	1/2 LD EFF	95.4	GTD EFF	ELECT. TYPE
F.L. PF	87.7	3/4 LD PF	85.8	1/2 LD PF	79.9	95.0	SQ CAGE IND RUN

F.L. TORQUE	LR AMPS @ 460 V	L.R. TORQUE	B.D. TORQUE	F.L. RISE (° C)
734 LB-FT	1,825	1,915 LB-FT 261%	1,650 LB-FT 225%	75

SOUND PRESSURE	SOUND	ROTOR WK²	MAX. LOAD WK²	SAFE STALL TIME	STARTS/HOUR	APROX.
84 dBA	93 dBA	75.0 LB-FT²	375 LB-FT²	18 SEC.	2	2262 LB.

*** SUPPLEMENTAL INFORMATION ***

DE BRACKET TYPE	ODE BRACKET TYPE	MOUNT TYPE	MOTOR ORIENTATION	SEVERE DUTY	HAZARDOUS LOCATION	DRIP COVER	SCREENS	PAINT
STANDARD	STANDARD	RIGID	HORIZONTAL	NO	NONE	YES	RODENT	RED (ENAMEL)

BEARINGS DE	BEARINGS ODE	GREASE	SHAFT TYPE	SPECIAL DE	SPECIAL ODE	SHAFT MATERIAL	FRAME MATERIAL
BALL 6319	BALL 6317	POLYREX EM	TS	NONE	NONE	1045 HOT ROLLED (C-204)	CAST IRON

THERMOSTATS	PROTECTORS	WDG RTD's	BRG RTD's	THERMISTORS	CONTROL	SPACE HEATERS
NONE	NOT	NONE	NONE	NONE	FALSE	NA

R1 (ohms/ph)	R2 (ohms/ph)	X1 (ohms/ph)	X2 (ohms/ph)	Xm (ohms/ph)	VIBRATION (in/sec)	FLOAT
0.014	0.006	0.069	0.16	3.391	0.150	ODE

*
N
O
T
E
S
*

INVERTER TORQUE: NONE
INV. HP SPEED RANGE: NONE

ENCODER: NONE
NONE
NONE NONE **PPR**

BRAKE: NONE
NONE NONE
FT-LB: NA
VOLTAGE: NONE **HZ:**

PREPARED BY:
DATE: 7/27/2022

FORM: 3531 REV_4 2/27/06

UL: NO LETTER - ALL BRANDS-UL LISTED FIRE PUMP MOTORS