marathon®

Fire Pump Motors

Model No: 405TSTDS4333
Catalog No: U533

Fire Pump Motor, 125 HP, 3 Ph, 60 Hz, 200/400 V, 1800 RPM, 405TS Frame, DP

©2026 Marathon, All Rights Reserved.

marathon®

Product Information Packet: Model No: 405TSTDS4333, Catalog No: U533 Fire Pump Motor, 125 HP, 3 Ph, 60 Hz, 200/400 V, 1800 RPM, 405TS Frame, DP

Nameplate Specifications

Phase	**3**	Output HP	**125 Hp**
Output KW	**93.0 kW**	Voltage	**200/400 V**
Speed	**1778 r/min**	Synchronous RPM	**1800 r/min**
Service Factor	**1.15**	Frame	**405TS**
Enclosure	**Drip Proof**	Thermal Protection	**No Protection**
Efficiency	**94.5 %**	Ambient Temperature	**50 °C**
Frequency	**60 Hz**	Current	**331.0/166.0 A**
Power Factor	**87**	Duty	**Continuous**
Insulation Class	**F**	Design Code	**B**
KVA Code	**G**	Drive End Bearing Size	**6313**
Opp Drive End Bearing Size	**6313**	UL	**Listed**
CSA	**Y**	CE	**Y**
IP Code	**12**	Number of Speeds	**1**

Technical Specifications

Electrical Type	**Squirrel Cage Induction Run**	Starting Method	**Wye Start Delta Run**
Poles	**4**	Rotation	**Reversible**
Resistance Main	**.045 O**	Mounting	**Rigid Base**
Motor Orientation	**Horizontal**	Drive End Bearing	**Ball**
Opp Drive End Bearing	**Ball**	Frame Material	**Cast Iron**
Shaft Type	**TS**	Overall Length	**31.06 in**
Frame Length	**17.0 in**	Shaft Diameter	**2 1/8 in**
Shaft Extension	**4.5 in**	Assembly/Box Mounting	**F1/F2 Capable**

Drawings

Connection Drawing	**A-EE7308AA**	Outline Drawing	**B-SS509257-1700**

This is an uncontrolled document once printed or downloaded and is subject to change without notice. Date Created: 16/10/2026

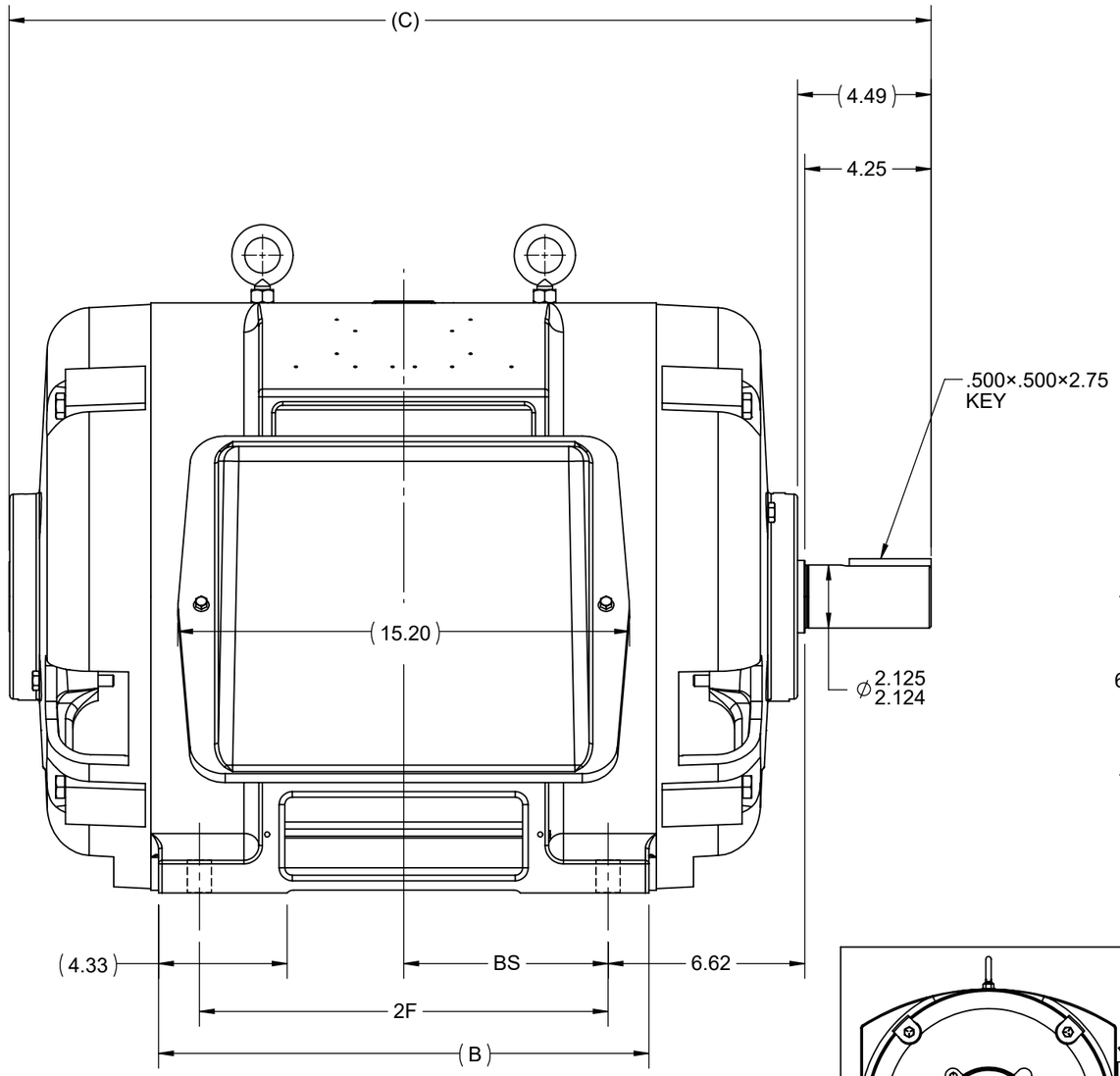

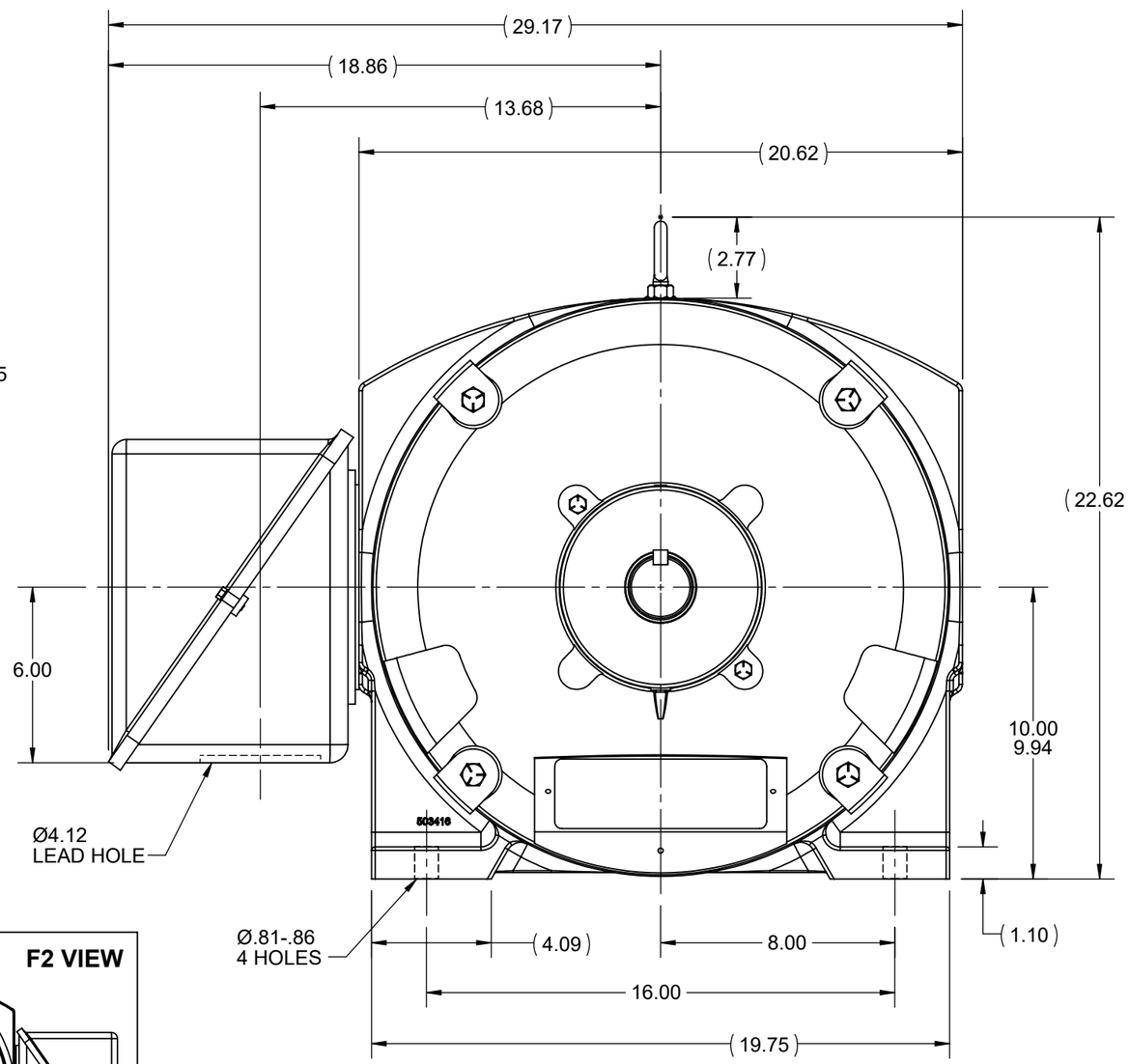

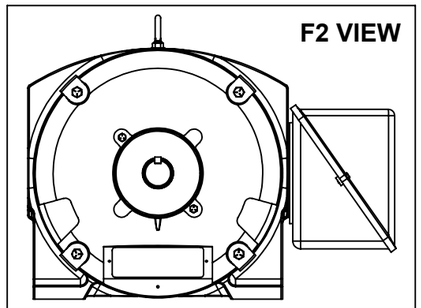

NOTE:
1. CONDUIT BOX CAN BE ROTATED IN 90° STEPS.
2. BOX CAN BE MOUNTED ON OPPOSITE SIDE BY REMOVING BRACKETS AND TURNING FRAME 180°
3. NAMEPLATES TO BE READ FROM CONDUIT BOX SIDE OF THE MOTOR

DASH	FRAME	B	C	2F	BS
1550	404TS	15.00	29.52	12.25	6.12
1700	405TS	16.50	31.02	13.75	6.88

DRAWING REVISION	REVISION BY	REV DATE/© DATE
L	BHUVAN	12/10/2024
REQUEST NUMBER	APPROVED BY	DATE
CR-0021161	SS	12/10/2024

REQUEST NUMBER DESCRIPTION
ADDED F2 VIEW

COPYRIGHT (PER REVISION DATE) MARATHON ELECTRIC, LLC. ALL RIGHTS RESERVED. PROPRIETARY AND CONFIDENTIAL INFORMATION - THIS DOCUMENT IS THE PROPERTY OF MARATHON ELECTRIC, LLC. ("OWNER") AND CONTAINS OWNER'S PROPRIETARY INFORMATION. ANY PERSON, CORPORATION OR OTHER FIRM RECEIVING IT IS DEEMED, BY RECEIVING IT, TO AGREE THAT IT, AND/OR ANY PART OF IT, SHALL NOT BE DISCLOSED TO ANY PERSON, CORPORATION OR OTHER ENTITY, DUPLICATED, AND/OR USED, EXCEPT AS EXPRESSLY APPROVED IN WRITING IN ADVANCE BY OWNER. THIS DOCUMENT SHALL BE RETURNED TO OWNER UPON REQUEST. IT MAY BE SUBJECT TO CERTAIN RESTRICTIONS UNDER APPLICABLE EXPORT CONTROL LAWS AND REGULATIONS.

TOLERANCES (EXCEPT AS NOTED):

DEC.	INCH	mm	ANGLE
.X	±0.1	[±3]	±7' 30"
.XX	±0.02	[±0.5]	
.XXX	±0.005	[±0.13]	
.XXXX	±0.0005	[±0.013]	

REMOVE BURRS & BREAK SHARP EDGES: .003/.015 [.08/.38] X 45°
CORNER FILLETS: R.02 [.5]
MACHINED SURFACES: 200 / INCH 5.1 / mm
mm DIMENSIONS IN [BRACKETS] ARE FOR REFERENCE ONLY

DRAWN BY	TLB
DATE	02-24-1988
APPROVED BY	ML
DATE	02-24-1988
REFERENCE	
THIRD ANGLE PROJECTION	

marathon™

DESCRIPTION
OUTLINE
400TS FR.-DR.PR.-(STD)

MATERIAL	PROCESS/FINISH

SIZE	DRAWING NUMBER	SHEET
B	SS509257	1 OF 1

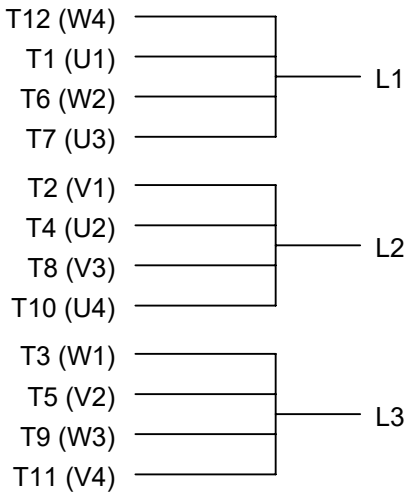

LOW VOLTAGE

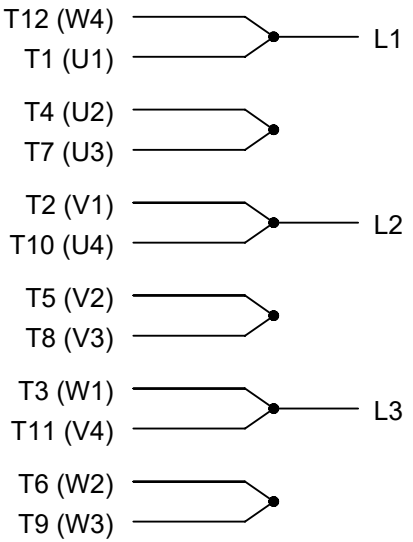

HIGH VOLTAGE

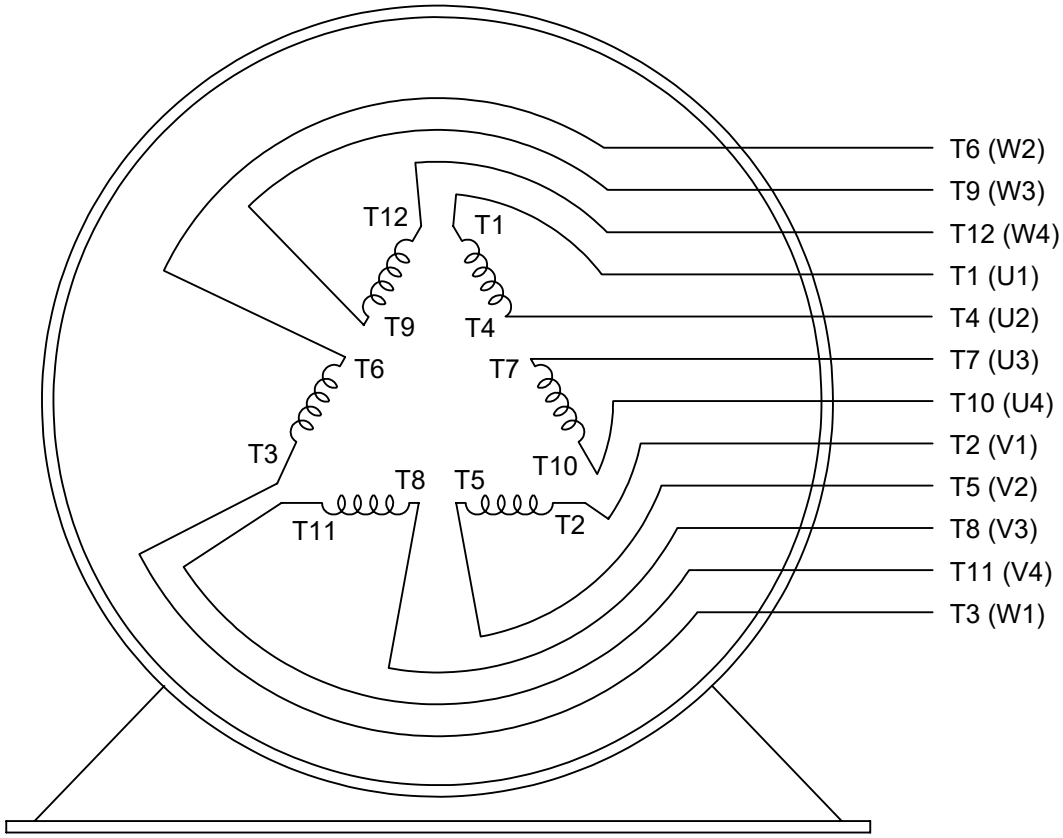

VIEW OF TERMINAL END

DRAWING REVISION: L	REVISION BY: SB	REV DATE/© DATE: 08/01/2025	PRIMARY DIMENSIONS ARE INCH mm DIMENSIONS IN [BRACKETS] ARE FOR REFERENCE ONLY	DRAWN BY: LZ	marathon™
REQUEST NUMBER: CR-0023654	APPROVED BY: SBD	DATE: 08/01/2025		DATE: 01-12-1994	
REQUEST NUMBER DESCRIPTION: DRAWING TITLE BLOCK UPDATED				APPROVED BY: GK	DESCRIPTION: CONN DIAGRAM-EXTERNAL 3Ø-2/1 DELTA-12 LEADS
				DATE: 01-14-1994	
				REFERENCE	MATERIAL / PROCESS/FINISH
				THIRD ANGLE PROJECTION	SIZE: A / DRAWING NUMBER: EE7308AA / SHEET: 1 OF 1

COPYRIGHT (PER REVISION DATE) MARATHON ELECTRIC, LLC. ALL RIGHTS RESERVED. PROPRIETARY AND CONFIDENTIAL INFORMATION - THIS DOCUMENT IS THE PROPERTY OF MARATHON ELECTRIC, LLC. ("OWNER") AND CONTAINS OWNER'S PROPRIETARY INFORMATION. ANY PERSON, CORPORATION OR OTHER FIRM RECEIVING IT IS DEEMED, BY RECEIVING IT, TO AGREE THAT IT, AND/OR ANY PART OF IT, SHALL NOT BE DISCLOSED TO ANY PERSON, CORPORATION OR OTHER ENTITY, DUPLICATED, AND/OR USED, EXCEPT AS EXPRESSLY APPROVED IN WRITING IN ADVANCE BY OWNER. THIS DOCUMENT SHALL BE RETURNED TO OWNER UPON REQUEST. IT MAY BE SUBJECT TO CERTAIN RESTRICTIONS UNDER APPLICABLE EXPORT CONTROL LAWS AND REGULATIONS.

Data Sheet

Date: 6/29/2017
Customer:
Attention:
Submitted by: FAREEDA DUDEKULA

marathon electric

405TSTDS4333

Submittal

Data @ 400 V

Motor Load Data

Load	0%	25%	50%	75%	100%	115%	125%	LR	
Current (Amps)	52.9	65.6	93.2	128	166	190	207	1,006	
Torque (ft-lb)	0.00	91.5	183	276	369	425	463	700	
RPM	1800	1795	1788	1782	1778	1,772	1768	0	
Efficiency (%)		89.5	93.6	94.5	94.5	94.1	93.6		
P.F. (%)	6.0	57.0	78.0	84.5	87.0	87.5	87.5	35.0	

Motor Speed Data

	LR	Pull-Up	BD	Rated	Idle
Speed (RPM)	0	900	1715	1778	1800
Current (Amps)	1,006	920	575	166	52.9
Torque (ft-lb)	700	650	950	369	0.00

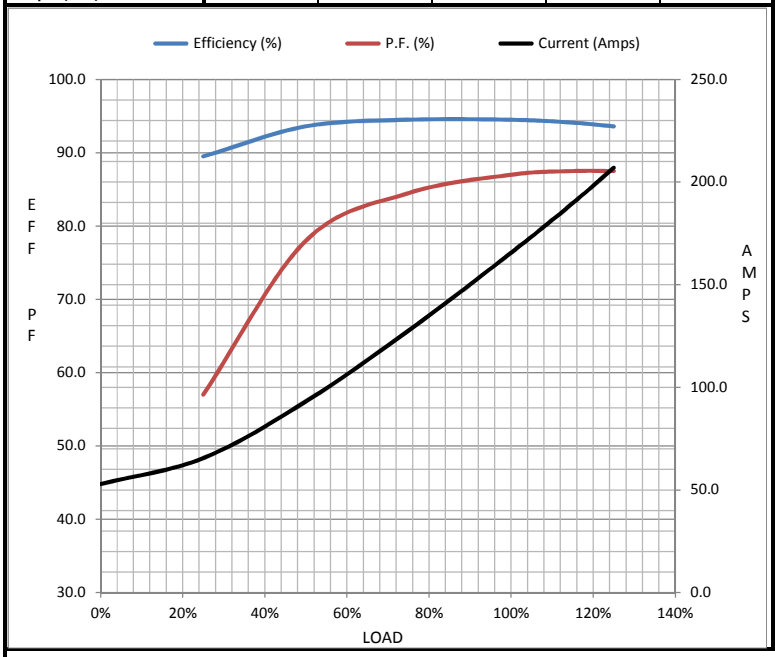

Information Block

HP	125.0
Sync. RPM	1800
Frame	405
Enclosure	DP
Construction	TDS
Voltage	200/400 V
Frequency	60 Hz
Design	B
LR Code letter	G
Service Factor	1.15
Temp Rise @ FL	55 ° C
Duty	CONT
Ambient	40 ° C
Elevation	1,000 feet
Rotor/Shaft wk²	26.5 Lb-Ft²
Ref Wdg	T4054138 NONE
Sound Pressure @ 1M	80 dBA
VFD Rating	NONE
Outline Dwg	B-SS509257-1700
Conn. Diag	A-EE7308AA
Additional Specifications:	
0	
0	

EQUIV CKT (OHMS / PHASE)

R1	R2	X1	X2	Xm
0.0240	0.0160	0.1420	0.1610	3.8930

Speed -Torque Curve

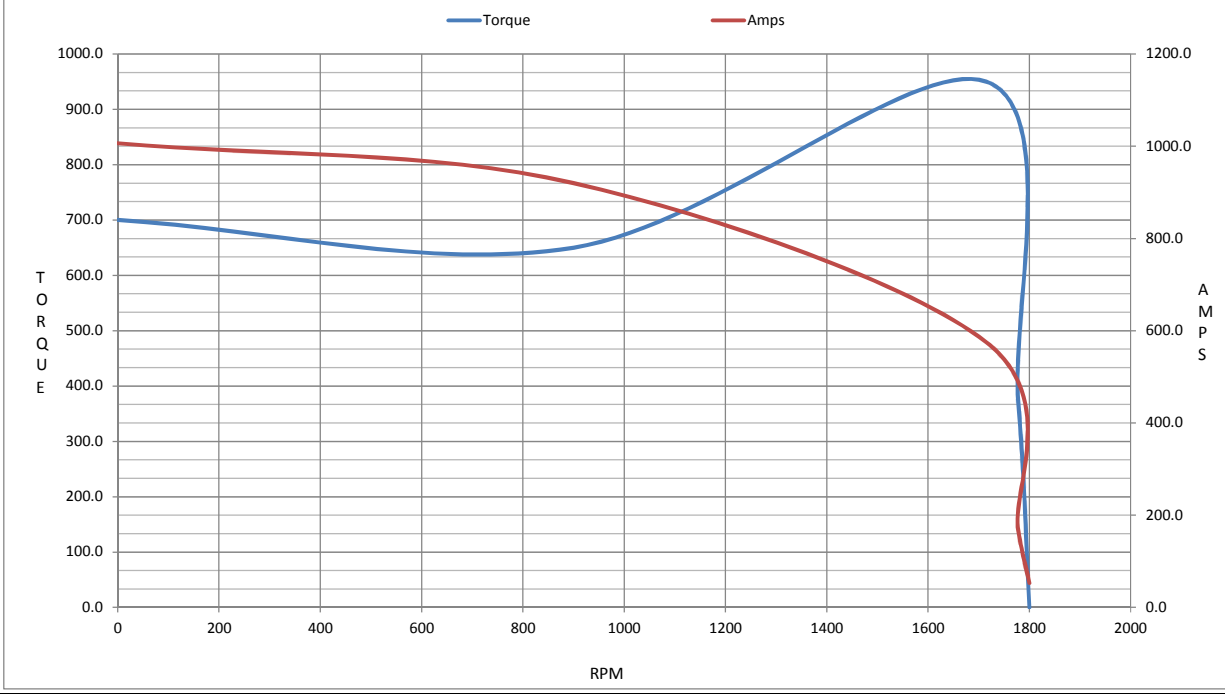

Uncontrolled Copy

CERTIFICATION DATA SHEET

Model#:	405TSTDS4333 BT	**WINDING#:**	T4054138 NONE 2
CONN. DIAGRAM:	A-EE7308AA	**ASSEMBLY:**	F1/F2 CAPABLE
OUTLINE:	B-SS509257-1700		

TYPICAL MOTOR PERFORMANCE DATA

HP	KW	SYNC. RPM	F.L. RPM	FRAME	ENCLOSURE	KVA CODE	DESIGN
125	93	1800	1778	405TS	DP	G	B

PH	Hz	VOLTS	FL AMPS	START TYPE	DUTY	INSL	S.F	AMB°C	ELEVATION
3	60	200/400	331/166	WYE START DELTA RUN	CONTINUOUS	B1	1.15	50	3300

FULL LOAD EFF: 94.5	3/4 LOAD EFF: 94.5	1/2 LOAD EFF: 93.6	GTD. EFF	ELEC. TYPE	NO LOAD AMPS
FULL LOAD PF: 87	**3/4 LOAD PF: 84.5**	**1/2 LOAD PF: 78**	93.6	SQ CAGE IND RUN	105.8 / 52.9

F.L. TORQUE	LOCKED ROTOR AMPS	L.R. TORQUE	B.D. TORQUE	F.L. RISE°C
369 LB-FT	2012.5 / 1006.3	700 LB-FT 190	950 LB-FT 257	55

SOUND PRESSURE @ 3 FT.	SOUND POWER	ROTOR WK^2	MAX. WK^2	SAFE STALL TIME	STARTS /HOUR	APPROX. MOTOR WGT
80 dBA	90 dBA	26.5 LB-FT^2	- LB-FT^2	20 SEC.	-	1150 LBS.

*** SUPPLEMENTAL INFORMATION ***

DE BRACKET TYPE	ODE BRACKET TYPE	MOUNT TYPE	ORIENTATION	SEVERE DUTY	HAZARDOUS LOCATION	DRIP COVER	SCREENS	PAINT
STANDARD	STANDARD	RIGID	HORIZONTAL	FALSE	NONE	FALSE	NONE	RED (ENAMEL)

BEARINGS		GREASE	SHAFT TYPE	SPECIAL DE	SPECIAL ODE	SHAFT MATERIAL	FRAME MATERIAL
DE	OPE						
BALL 6313	BALL 6313	POLYREX EM	TS	NONE	NONE	1045 HOT ROLLED (C-204)	CAST IRON

THERMO-PROTECTORS				THERMISTORS	CONTROL	SPACE /n HEATERS
THERMOSTATS	PROTECTORS	WDG RTDs	BRG RTDs			
NONE	NOT	NONE	NONE	NONE	FALSE	NONE VOLTS

If Inverter equals NONE, contact factory for further information

INVERTER TORQUE: NONE
INV. HP SPEED RANGE: NONE

ENCODER: NONE
NONE NONE
NONE NONE PPR

BRAKE: NONE NONE
NONE P/N NONE
NONE NONE
- FT-LB NONE V NONE Hz

*
N
O
T
E
S
*

DATE: 06/21/2017 08:25:29 AM
FORM 3531 REV.3 02/07/99
** Subject to change without notice.