Fire Pump Motors

Model No: 405TSTDCD4334
Catalog No: U532B

Fire Pump Motor, 125 & 100 HP, 3 Ph, 60 & 50 Hz, 460 & 380 V, 1800 RPM, 405TS Frame, DP

©2026 Marathon, All Rights Reserved.

marathon®

Product Information Packet: Model No: 405TSTDCD4334, Catalog No: U532B Fire Pump Motor, 125 & 100 HP, 3 Ph, 60 & 50 Hz, 460 & 380 V, 1800 RPM, 405TS Frame, DP

Nameplate Specifications

Phase	**3**	Output HP	**125 & 100 Hp**
Output KW	**93.0 & 75.0 kW**	Voltage	**460 & 380 V**
Speed	**1783 & 1483 r/min**	Synchronous RPM	**1800 & 1500 r/min**
Service Factor	**1.15 & 1.15**	Frame	**405TS**
Enclosure	**Drip Proof**	Thermal Protection	**No Protection**
Efficiency	**94.5 & 93.8 %**	Ambient Temperature	**50 °C**
Frequency	**60 & 50 Hz**	Current	**141 & 137 A**
Power Factor	**88**	Duty	**Continuous**
Insulation Class	**F**	Design Code	**B**
KVA Code	**G**	Drive End Bearing Size	**6316**
Opp Drive End Bearing Size	**6314**	UL	**Listed**
CSA	**Y**	CE	**Y**
IP Code	**23**	Number of Speeds	**1**

Technical Specifications

Electrical Type	**Squirrel Cage Induction Run**	Starting Method	**Part Wdg Start & Wye Start Delta Run**
Poles	**4**	Rotation	**Reversible**
Resistance Main	**.064 O**	Mounting	**Rigid Base**
Motor Orientation	**Horizontal**	Drive End Bearing	**Ball**
Opp Drive End Bearing	**Ball**	Frame Material	**Cast Iron**
Shaft Type	**TS**	Shaft Diameter	**2.125 in**
Assembly/Box Mounting	**F1/F2 Capable**		

Drawings

Connection Drawing	**EE7300BH**	Outline Drawing	**SS620909**

This is an uncontrolled document once printed or downloaded and is subject to change without notice. Date Created: 16/10/2026

Uncontrolled Copy

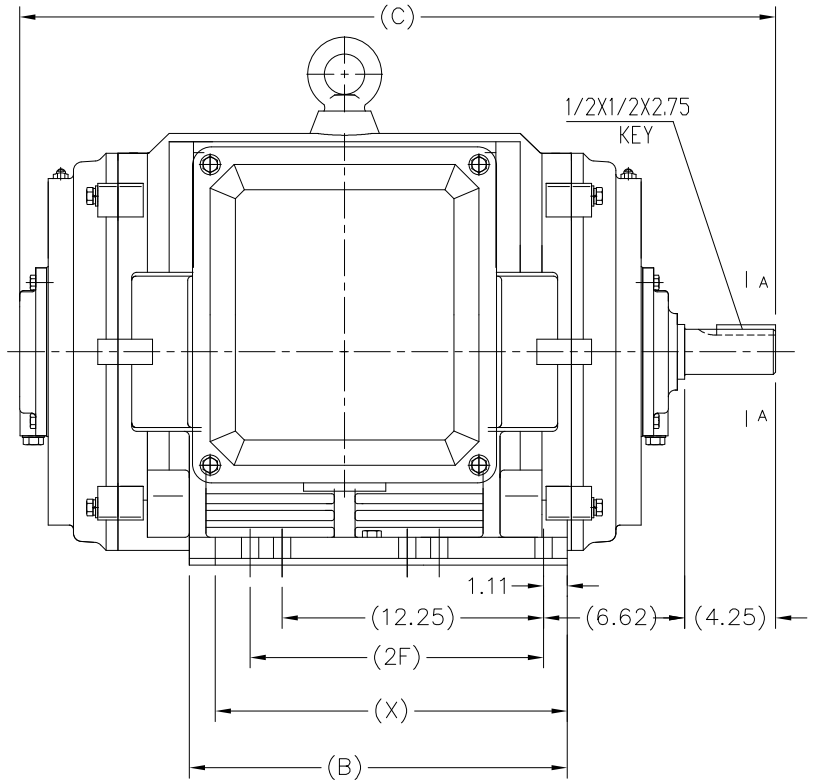

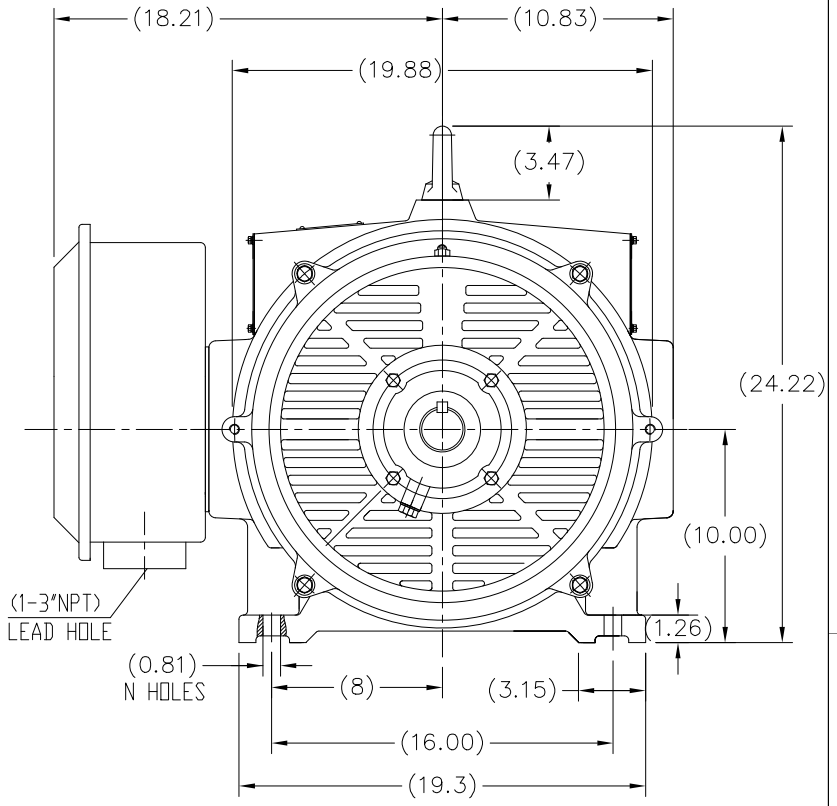

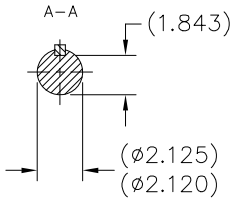

F2 MOUNTING

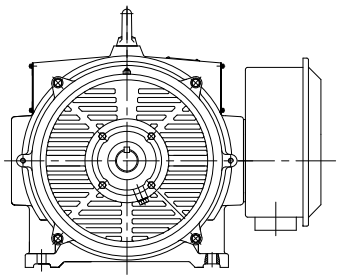

404TS	33.86	16.22	N/A	15.00
405TS	35.44	17.72	13.75	16.50
Frame	C	B	2F	X

DRAWING REVISION: B	REVISION BY: SB	REV DATE/ © DATE: 08/21/2025
REQUEST NUMBER: CR-0023600	APPROVED BY: SBD	DATE: 08/21/2025
REQUEST NUMBER DESCRIPTION: DRAWING TITLE BLOCK UPDATED		

COPYRIGHT (PER REVISION DATE) MARATHON ELECTRIC, LLC. ALL RIGHTS RESERVED.
PROPRIETARY AND CONFIDENTIAL INFORMATION - THIS DOCUMENT IS THE PROPERTY OF MARATHON ELECTRIC, LLC. ("OWNER") AND CONTAINS OWNER'S PROPRIETARY INFORMATION. ANY PERSON, CORPORATION OR OTHER FORM RECEIVING IT IS DEEMED, BY RECEIVING IT, TO AGREE THAT IT, AND/OR ANY PART OF IT, SHALL NOT BE DISCLOSED TO ANY PERSON, CORPORATION OR OTHER ENTITY, DUPLICATED, AND/OR USED, EXCEPT AS EXPRESSLY APPROVED IN WRITING IN ADVANCE BY OWNER. THIS DOCUMENT SHALL BE RETURNED TO OWNER UPON REQUEST. IT MAY BE SUBJECT TO CERTAIN RESTRICTIONS UNDER APPLICABLE EXPORT CONTROL LAWS AND REGULATIONS.

TOLERANCES (EXCEPT AS NOTED):

DEC.	INCH	mm	ANGLE
.X	± 0.1	± [3]	± 7' 30"
.XX	± 0.03	± [0.8]	
.XXX	± 0.005	± [0.13]	
.XXXX	± 0.0005	[± 0.013]	

REMOVE BURRS & BREAK SHARP EDGES: .003/.015 [.08/.38] X 45 °
CORNER FILLETS: R.02 [.5]
MACHINED SURFACES: 200 / INCH 51
mm DIMENSIONS IN [BRACKETS] ARE FOR REFERENCE ONLY

DRAWN BY	NK
DATE	04/15/2019
APPROVED BY	VY
DATE	04/15/2019
REFERENCE	SS620752
MATERIAL	
PROCESS/FINISH	
THIRD ANGLE PROJECTION	
SIZE	B
DRAWING NUMBER	SS620909
SHEET	1 OF 1

marathon™

DESCRIPTION: OUTLINE
404/405 TS FR - ODP - CAST IRON

Uncontrolled Copy

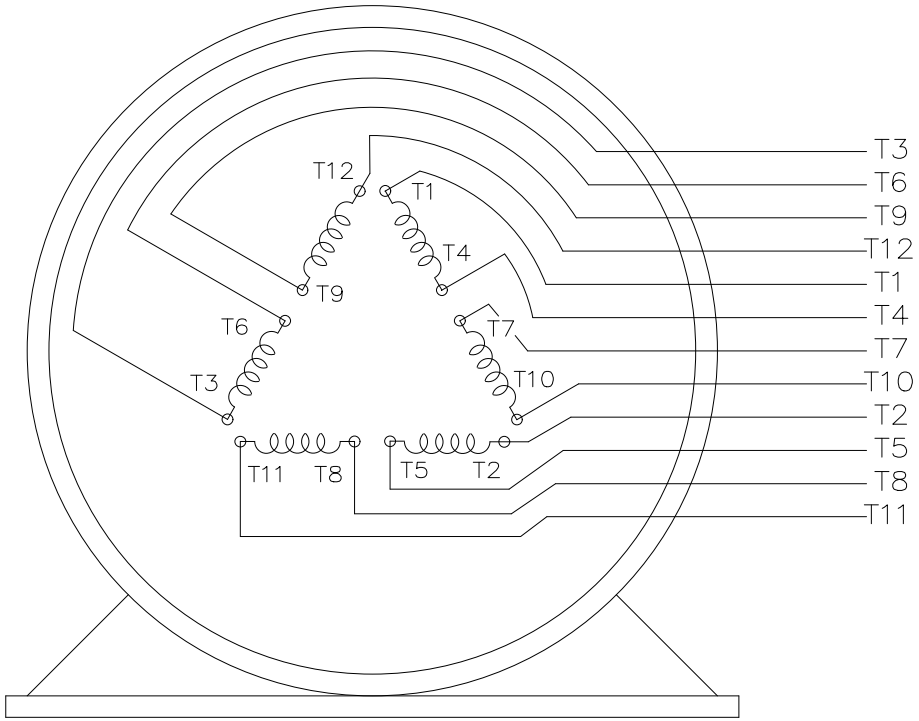

VIEW OF TERMINAL END

T12(W4)
T1(U1)
T6(W2)
T7(U3)
LINE 1

T2(V1)
T4(U2)
T8(V3)
T10(U4)
LINE 2

T3(W1)
T5(V2)
T9(W3)
T11(V4)
LINE 3

DRAWING REVISION: E	REVISION BY: SB	REV DATE/ © DATE: 08/04/2025
REQUEST NUMBER: CR-0023654	APPROVED BY: SBD	DATE: 08/04/2025
REQUEST NUMBER DESCRIPTION: DRAWING TITLE BLOCK UPDATED		

COPYRIGHT (PER REVISION DATE) MARATHON ELECTRIC, LLC. ALL RIGHTS RESERVED.
PROPRIETARY AND CONFIDENTIAL INFORMATION - THIS DOCUMENT IS THE PROPERTY OF MARATHON ELECTRIC, LLC. ("OWNER") AND CONTAINS OWNER'S PROPRIETARY INFORMATION. ANY PERSON, CORPORATION OR OTHER FIRM RECEIVING IT IS DEEMED, BY RECEIVING IT, TO AGREE THAT IT, AND/OR ANY PART OF IT, SHALL NOT BE DISCLOSED TO ANY PERSON, CORPORATION OR OTHER ENTITY, DUPLICATED, AND/OR USED, EXCEPT AS EXPRESSLY APPROVED IN WRITING IN ADVANCE BY OWNER. THIS DOCUMENT SHALL BE RETURNED TO OWNER UPON REQUEST. IT MAY BE SUBJECT TO CERTAIN RESTRICTIONS UNDER APPLICABLE EXPORT CONTROL LAWS AND REGULATIONS.

PRIMARY DIMENSIONS ARE INCH
mm DIMENSIONS IN [BRACKETS]
ARE FOR REFERENCE ONLY

DRAWN BY: RJW	marathon™	
DATE: 02/11/2005		
APPROVED BY: GK	DESCRIPTION: CONNECTION DIAGRAM 12 LEAD - SINGLE VOLTAGE	
DATE: 02/11/2005		
REFERENCE	MATERIAL	PROCESS/FINISH
THIRD ANGLE PROJECTION	SIZE: A / DRAWING NUMBER: EE7300BH	SHEET: 1 OF 1