marathon®

# Fire Pump Motors

**Model No:** 405TSTDCD4029
**Catalog No:** U1432

Fire Pump Motor, 125 HP, 3 Ph, 50 Hz, 415 V, 1500 RPM, 405TS Frame, DP

©2026 Marathon, All Rights Reserved.

marathon®

# Product Information Packet: Model No: 405TSTDCD4029, Catalog No: U1432 Fire Pump Motor, 125 HP, 3 Ph, 50 Hz, 415 V, 1500 RPM, 405TS Frame, DP

## Nameplate Specifications

| | | | |
|---|---|---|---|
| Phase | **3** | Output HP | **125 Hp** |
| Output KW | **93.0 kW** | Voltage | **415 V** |
| Speed | **1483 r/min** | Synchronous RPM | **1500 r/min** |
| Service Factor | **1.15** | Frame | **405TS** |
| Enclosure | **Drip Proof** | Thermal Protection | **No Protection** |
| Efficiency | **93 %** | Ambient Temperature | **50 °C** |
| Frequency | **50 Hz** | Current | **157.0 A** |
| Power Factor | **88** | Duty | **Continuous** |
| Insulation Class | **F** | Design Code | **B** |
| KVA Code | **G** | Drive End Bearing Size | **6316** |
| Opp Drive End Bearing Size | **6314** | UL | **Listed** |
| CSA | **Y** | CE | **Y** |
| IP Code | **23** | Number of Speeds | **1** |

## Technical Specifications

| | | | |
|---|---|---|---|
| Electrical Type | **Squirrel Cage Induction Run** | Starting Method | **Part Wdg Start & Wye Start Delta Run** |
| Poles | **4** | Rotation | **Reversible** |
| Resistance Main | **.0651 O** | Mounting | **Rigid Base** |
| Motor Orientation | **Horizontal** | Drive End Bearing | **Ball** |
| Opp Drive End Bearing | **Ball** | Frame Material | **Cast Iron** |
| Shaft Type | **TS** | Shaft Diameter | **2.125 in** |
| Assembly/Box Mounting | **F1/F2 Capable** | | |

## Drawings

| | | | |
|---|---|---|---|
| Connection Drawing | **EE7300BH** | Outline Drawing | **SS620989** |

This is an uncontrolled document once printed or downloaded and is subject to change without notice. Date Created: 16/10/2026

| B | C | E | 2E | 2F | 2FF | BA | BS | MOUNTING |
|---|---|---|---|---|---|---|---|---|
| 16.85 | 31.44 | 8.00 | 16.00 | 12.25 | 13.75 | 6.62 | 6.87 | F1 OR F2 |

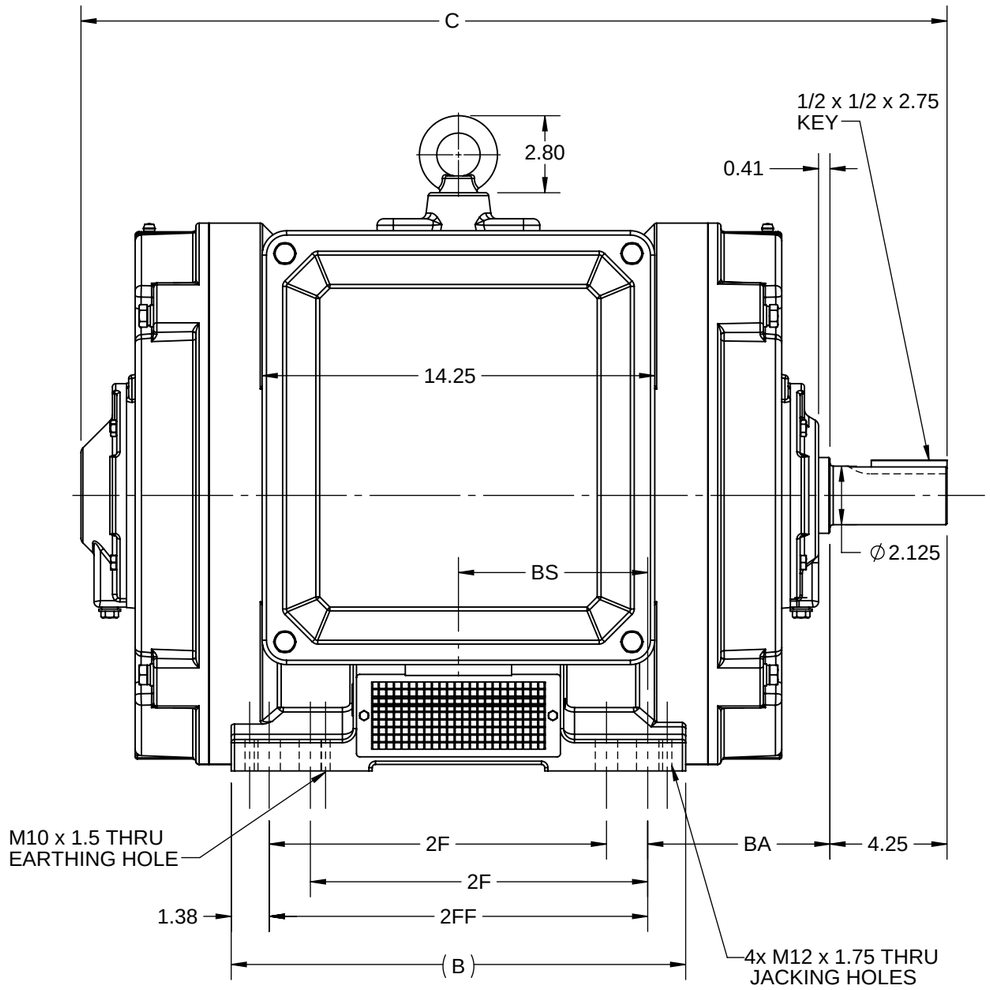


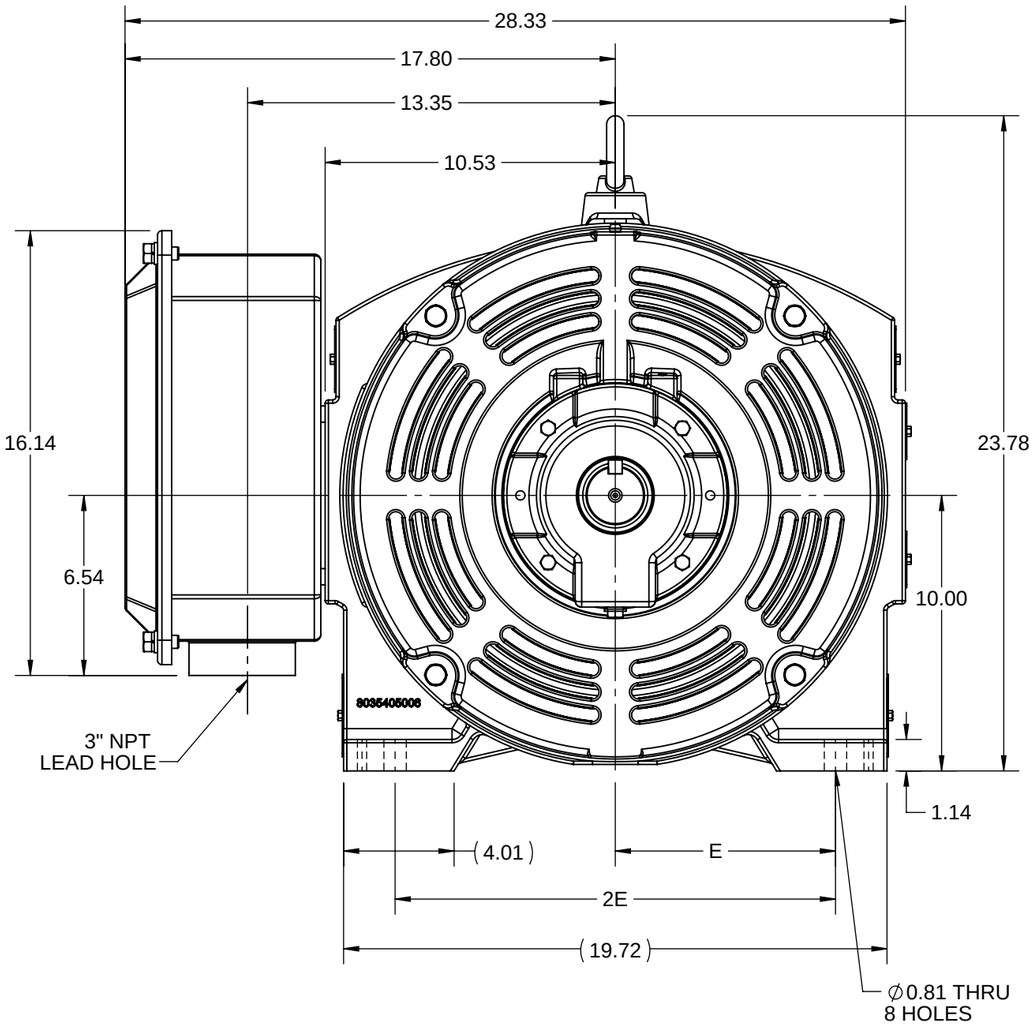


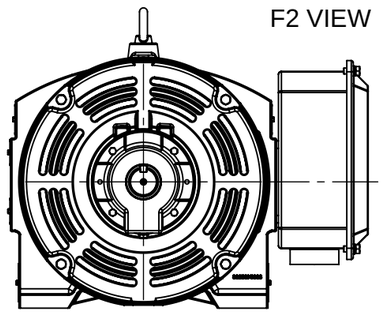


| DRAWING REVISION | REVISION BY | REV DATE/© DATE |
|---|---|---|
| C | SB | 05/29/2026 |
| REQUEST NUMBER | APPROVED BY | DATE |
| CR-0026424 | RMS | 05/29/2026 |

REQUEST NUMBER DESCRIPTION
DRAWING TITLE BLOCK UPDATED

COPYRIGHT (PER REVISION DATE) MARATHON ELECTRIC, LLC. ALL RIGHTS RESERVED. PROPRIETARY AND CONFIDENTIAL INFORMATION - THIS DOCUMENT IS THE PROPERTY OF MARATHON ELECTRIC, LLC. ("OWNER") AND CONTAINS OWNER'S PROPRIETARY INFORMATION. ANY PERSON, CORPORATION OR OTHER FIRM RECEIVING IT IS DEEMED, BY RECEIVING IT, TO AGREE THAT IT, AND/OR ANY PART OF IT, SHALL NOT BE DISCLOSED TO ANY PERSON, CORPORATION OR OTHER ENTITY, DUPLICATED, AND/OR USED, EXCEPT AS EXPRESSLY APPROVED IN WRITING IN ADVANCE BY OWNER. THIS DOCUMENT SHALL BE RETURNED TO OWNER UPON REQUEST. IT MAY BE SUBJECT TO CERTAIN RESTRICTIONS UNDER APPLICABLE EXPORT CONTROL LAWS AND REGULATIONS.

PRIMARY DIMENSIONS ARE INCH
mm DIMENSIONS IN [BRACKETS]
ARE FOR REFERENCE ONLY

| DRAWN BY | DESCRIPTION |
|---|---|
| VS | OUTLINE |
| DATE | 404/405TS FR NEMA ODP |
| 11/01/2019 | |
| APPROVED BY | |
| SBD | |
| DATE | |
| 11/01/2019 | |
| REFERENCE | MATERIAL / PROCESS/FINISH |
| THIRD ANGLE PROJECTION | SIZE B / DRAWING NUMBER SS620989 / SHEET 1 OF 1 |

marathon™

Uncontrolled Copy

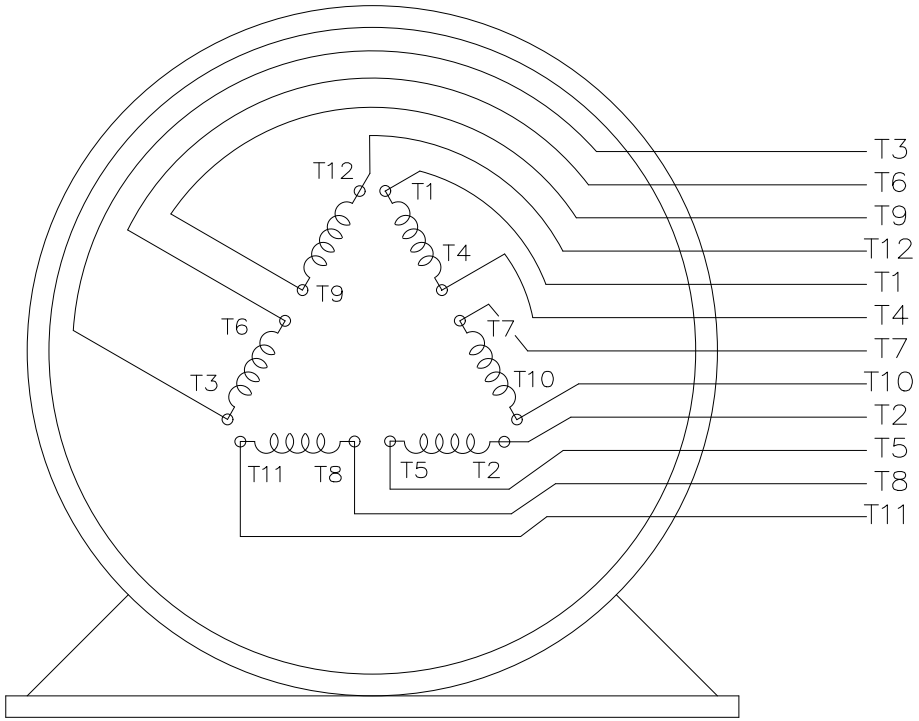


VIEW OF TERMINAL END

T12(W4)
T1(U1)
T6(W2)
T7(U3)
LINE 1

T2(V1)
T4(U2)
T8(V3)
T10(U4)
LINE 2

T3(W1)
T5(V2)
T9(W3)
T11(V4)
LINE 3

| | | |
|---|---|---|
| DRAWING REVISION: E | REVISION BY: SB | REV DATE/ © DATE: 08/04/2025 |
| REQUEST NUMBER: CR-0023654 | APPROVED BY: SBD | DATE: 08/04/2025 |
| REQUEST NUMBER DESCRIPTION: DRAWING TITLE BLOCK UPDATED | | |

COPYRIGHT (PER REVISION DATE) MARATHON ELECTRIC, LLC. ALL RIGHTS RESERVED.
PROPRIETARY AND CONFIDENTIAL INFORMATION - THIS DOCUMENT IS THE PROPERTY OF MARATHON ELECTRIC, LLC. ("OWNER") AND CONTAINS OWNER'S PROPRIETARY INFORMATION. ANY PERSON, CORPORATION OR OTHER FIRM RECEIVING IT IS DEEMED, BY RECEIVING IT, TO AGREE THAT IT, AND/OR ANY PART OF IT, SHALL NOT BE DISCLOSED TO ANY PERSON, CORPORATION OR OTHER ENTITY, DUPLICATED, AND/OR USED, EXCEPT AS EXPRESSLY APPROVED IN WRITING IN ADVANCE BY OWNER. THIS DOCUMENT SHALL BE RETURNED TO OWNER UPON REQUEST. IT MAY BE SUBJECT TO CERTAIN RESTRICTIONS UNDER APPLICABLE EXPORT CONTROL LAWS AND REGULATIONS.

PRIMARY DIMENSIONS ARE INCH
mm DIMENSIONS IN [BRACKETS]
ARE FOR REFERENCE ONLY

| | | |
|---|---|---|
| DRAWN BY: RJW | marathon™ | |
| DATE: 02/11/2005 | | |
| APPROVED BY: GK | DESCRIPTION: CONNECTION DIAGRAM<br>12 LEAD - SINGLE VOLTAGE | |
| DATE: 02/11/2005 | | |
| REFERENCE | MATERIAL | PROCESS/FINISH |
| THIRD ANGLE PROJECTION | SIZE: A / DRAWING NUMBER: EE7300BH | SHEET: 1 OF 1 |

# Data Sheet

Date: 11/17/2021
Customer:
Attention:
Submitted by:

marathon® Motors

405TSTDCD4029

**Submittal**

Data @ 415 V

## Motor Load Data

| Load | 0% | 25% | 50% | 75% | 100% | 115% | 125% | LR | |
|---|---|---|---|---|---|---|---|---|---|
| Current (Amps) | 47.0 | 59.5 | 86.0 | 120 | 157 | 181 | 198 | 955 | |
| Torque (ft-lb) | 0.00 | 110 | 220 | 331 | 443 | 510 | 555 | 800 | |
| RPM | 1500 | 1496 | 1492 | 1487 | 1483 | 1,479 | 1477 | 0 | |
| Efficiency (%) | | 93.1 | 94.9 | 94.7 | 93.0 | 93.2 | 92.8 | | |
| P.F. (%) | 4.3 | 58.5 | 79.1 | 85.8 | 88.0 | 88.4 | 88.3 | 40.0 | |

## Motor Speed Data

| | LR | Pull-Up | BD | Rated | Idle |
|---|---|---|---|---|---|
| Speed (RPM) | 0 | 750 | 1411 | 1483 | 1500 |
| Current (Amps) | 955 | 750 | 547 | 157 | 47.0 |
| Torque (ft-lb) | 800 | 630 | 1,075 | 443 | 0.00 |

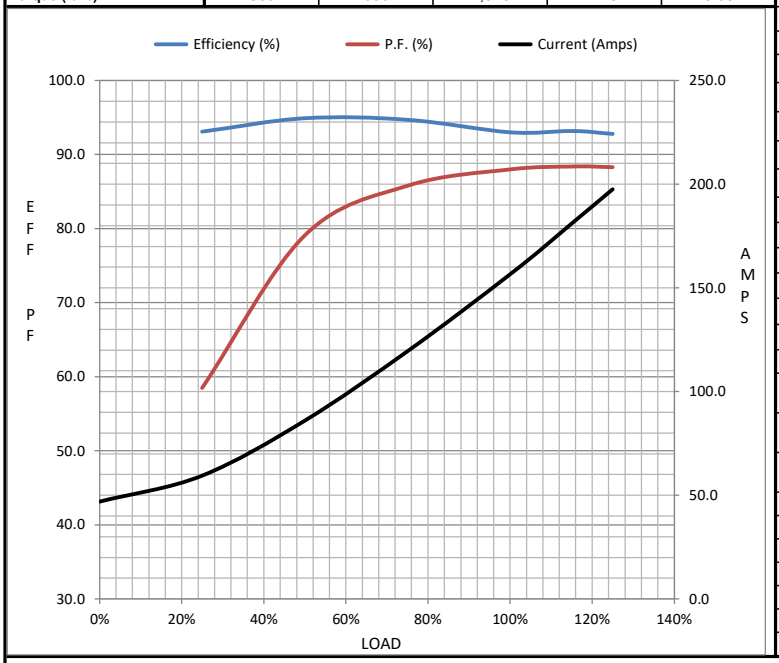


## Information Block

| | | |
|---|---|---|
| HP | 125.0 | |
| Sync. RPM | 1500 | |
| Frame | 405 | |
| Enclosure | DP | |
| Construction | TDC | |
| Voltage | 415 | V |
| Frequency | 50 | Hz |
| Design | B | |
| LR Code letter | G | |
| Service Factor | 1.15 | |
| Temp Rise @ FL | 75 | ° C |
| Duty | CONT | |
| Ambient | 40 | ° C |
| Elevation | 3,300 | feet |
| Rotor/Shaft wk² | 38.73 | Lb-Ft² |
| Ref Wdg | HA22504106 NONE | |
| Sound Pressure @ 1M | 84 | dBA |
| VFD Rating | NONE | |
| Outline Dwg | SS620989 | |
| Conn. Diag | EE7300BH | |

Additional Specifications:

0

0

EQUIV CKT (OHMS / PHASE)

| R1 | R2 | X1 | X2 | Xm |
|---|---|---|---|---|
| 0.0410 | 0.0180 | 0.1190 | 0.2170 | 5.0420 |

## Speed -Torque Curve

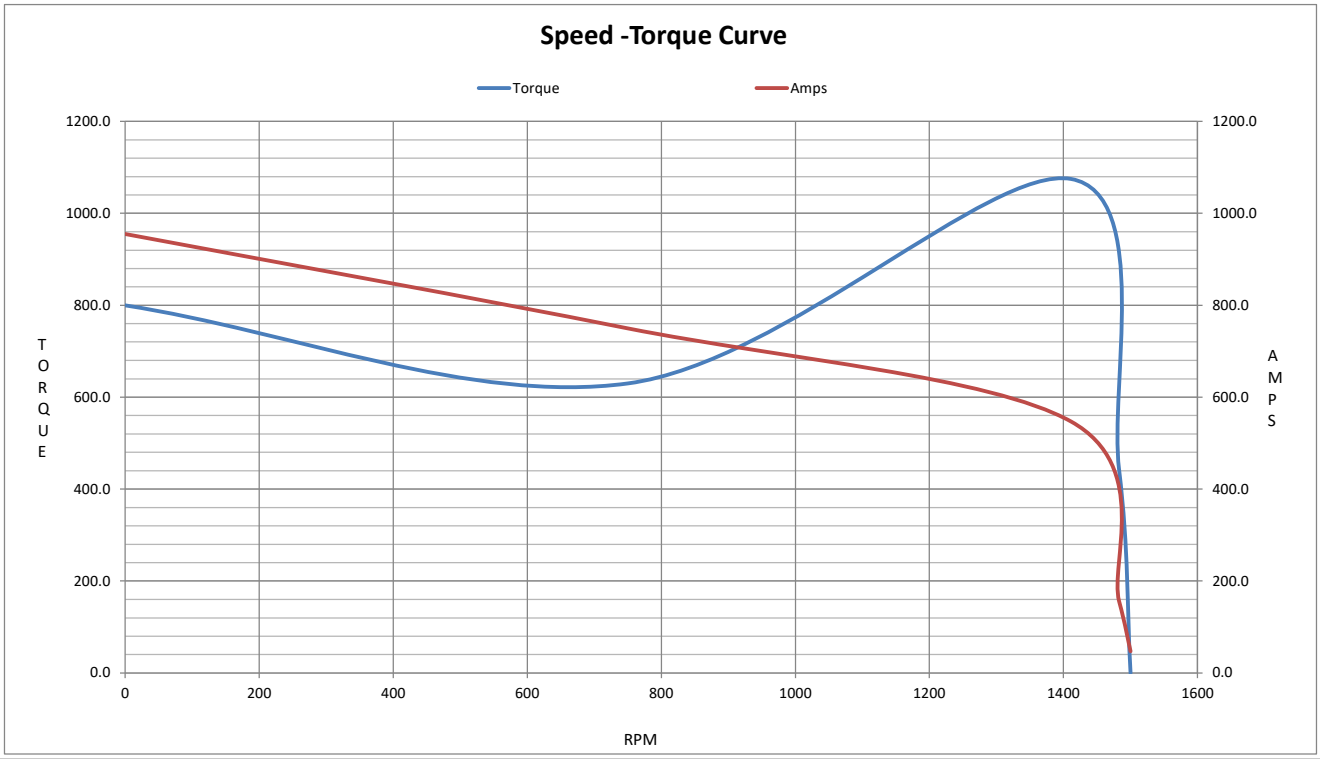

P.O. BOX 8003
WAUSAU, WI 54401-8003
PH. 715-675-3311

marathon® Motors

DATA VOLTS: 415

## CERTIFICATION DATA SHEET

CUSTOMER:
ORDER #:
CONN. DIAGRAM: EE7300BH
OUTLINE: SS620989
WINDING: HA22504106 NONE 1
SPEED:

CUSTOMER P.O. #:
REFERENCE MODEL #: 405TSTDCD4029
CAT #: U1432
CUSTOMER PART #:
MOUNTING: F1/F2 CAPABLE

### TYPICAL MOTOR PERFORMANCE DATA

| HP | KW | SYNC RPM | FL RPM | FRAME | ENCLOSURE | TYPE | KVA CODE | DESIGN |
|---|---|---|---|---|---|---|---|---|
| 125 | 93 | 1500 | 1483 | 405TS | DP | TDC | G | B |

| PH | HZ | VOLTS | AMPS | START TYPE | DUTY | INSL | S.F. | AMB | ELEV. |
|---|---|---|---|---|---|---|---|---|---|
| 3 | 50 | 415 | 157 | PWS & YDRUN | CONT | F | 1.15 | 50 | 3300 |

| | | | | | | | |
|---|---|---|---|---|---|---|---|
| F.L. EFF | 93.0 | 3/4 LD EFF | 94.7 | 1/2 LD EFF | 94.9 | GTD EFF | ELECT. TYPE |
| F.L. PF | 88.0 | 3/4 LD PF | 85.8 | 1/2 LD PF | 79.1 | 92.4 | SQ CAGE IND RUN |

| F.L. TORQUE | LR AMPS @ 460 V | L.R. TORQUE | | B.D. TORQUE | | F.L. RISE (°C) | |
|---|---|---|---|---|---|---|---|
| 443 LB-FT | 955 | 800 LB-FT | 181% | 1,075 LB-FT | 243% | 75 | |

| SOUND PRESSURE @ 3 FT. | SOUND POWER | ROTOR WK² | MAX. LOAD WK² | SAFE STALL TIME | STARTS/HOUR | APROX. MOTOR WGT |
|---|---|---|---|---|---|---|
| 84 dBA | 93 dBA | 38.73 LB-FT² | 315 LB-FT² | 17 SEC. | 2 | 1080 LB. |

### *** SUPPLEMENTAL INFORMATION ***

| DE BRACKET TYPE | ODE BRACKET TYPE | MOUNT TYPE | MOTOR ORIENTATION | SEVERE DUTY | HAZARDOUS LOCATION | DRIP COVER | SCREENS | PAINT |
|---|---|---|---|---|---|---|---|---|
| STANDARD | STANDARD | RIGID | HORIZONTAL | NO | NONE | YES | RODENT | RED (ENAMEL) |

| BEARINGS DE | BEARINGS ODE | GREASE | SHAFT TYPE | SPECIAL DE | SPECIAL ODE | SHAFT MATERIAL | FRAME MATERIAL |
|---|---|---|---|---|---|---|---|
| BALL | BALL | POLYREX EM | TS | NONE | NONE | 1045 HOT ROLLED (C-204) | CAST IRON |
| 6316 | 6314 | | | | | | |

| THERMOSTATS | PROTECTORS | WDG RTD's | BRG RTD's | THERMISTORS | CONTROL | SPACE HEATERS |
|---|---|---|---|---|---|---|
| NONE | NOT | NONE | NONE | NONE | FALSE | NA |

| R1 (ohms/ph) | R2 (ohms/ph) | X1 (ohms/ph) | X2 (ohms/ph) | Xm (ohms/ph) | VIBRATION (in/sec) | FLOAT |
|---|---|---|---|---|---|---|
| 0.041 | 0.018 | 0.119 | 0.217 | 5.042 | 0.150 | ODE |

* NOTES *

INVERTER TORQUE: NONE
INV. HP SPEED RANGE: NONE

ENCODER: NONE
NONE
NONE NONE PPR

BRAKE: NONE
NONE NONE
FT-LB: NA
VOLTAGE: NONE HZ:

PREPARED BY:
DATE: 11/17/2021

FORM: 3531 REV_4 2/27/06

UL: NO LETTER - ALL BRANDS-UL LISTED FIRE PUMP MOTORS