marathon®

# Fire Pump Motors

**Model No:** 405TSTDCD14019
**Catalog No:** U1534B

Fire Pump Motor, 150 HP, 3 Ph, 60 Hz, 380 V, 3600 RPM, 405TS Frame, DP

©2026 Marathon, All Rights Reserved.

marathon®

# Product Information Packet: Model No: 405TSTDCD14019, Catalog No: U1534B  Fire Pump Motor, 150 HP, 3 Ph, 60 Hz, 380 V, 3600 RPM, 405TS Frame, DP

## Nameplate Specifications

| | | | |
|---|---|---|---|
| Phase | **3** | Output HP | **150 Hp** |
| Output KW | **112.0 kW** | Voltage | **380 V** |
| Speed | **3570 r/min** | Synchronous RPM | **3600 r/min** |
| Service Factor | **1.15** | Frame | **405TS** |
| Enclosure | **Drip Proof** | Thermal Protection | **No Protection** |
| Efficiency | **93.6 %** | Ambient Temperature | **50 °C** |
| Frequency | **60 Hz** | Current | **200.0 A** |
| Power Factor | **90.7** | Duty | **Continuous** |
| Insulation Class | **F** | Design Code | **B** |
| KVA Code | **F** | Drive End Bearing Size | **6314** |
| Opp Drive End Bearing Size | **6314** | UL | **Listed** |
| CSA | **Y** | CE | **Y** |
| IP Code | **23** | Number of Speeds | **1** |

## Technical Specifications

| | | | |
|---|---|---|---|
| Electrical Type | **Squirrel Cage Induction Run** | Starting Method | **Part Wdg Start & Wye Start Delta Run** |
| Poles | **2** | Rotation | **Reversible** |
| Resistance Main | **.064 O** | Mounting | **Rigid Base** |
| Motor Orientation | **Horizontal** | Drive End Bearing | **Ball** |
| Opp Drive End Bearing | **Ball** | Frame Material | **Cast Iron** |
| Shaft Type | **TS** | Assembly/Box Mounting | **F1/F2 Capable** |

## Drawings

| | | | |
|---|---|---|---|
| Connection Drawing | **EE7300BH** | Outline Drawing | **SS620989** |

This is an uncontrolled document once printed or downloaded and is subject to change without notice. Date Created: 21/10/2026

| B | C | E | 2E | 2F | 2FF | BA | BS | MOUNTING |
|---|---|---|---|---|---|---|---|---|
| 16.85 | 31.44 | 8.00 | 16.00 | 12.25 | 13.75 | 6.62 | 6.87 | F1 OR F2 |

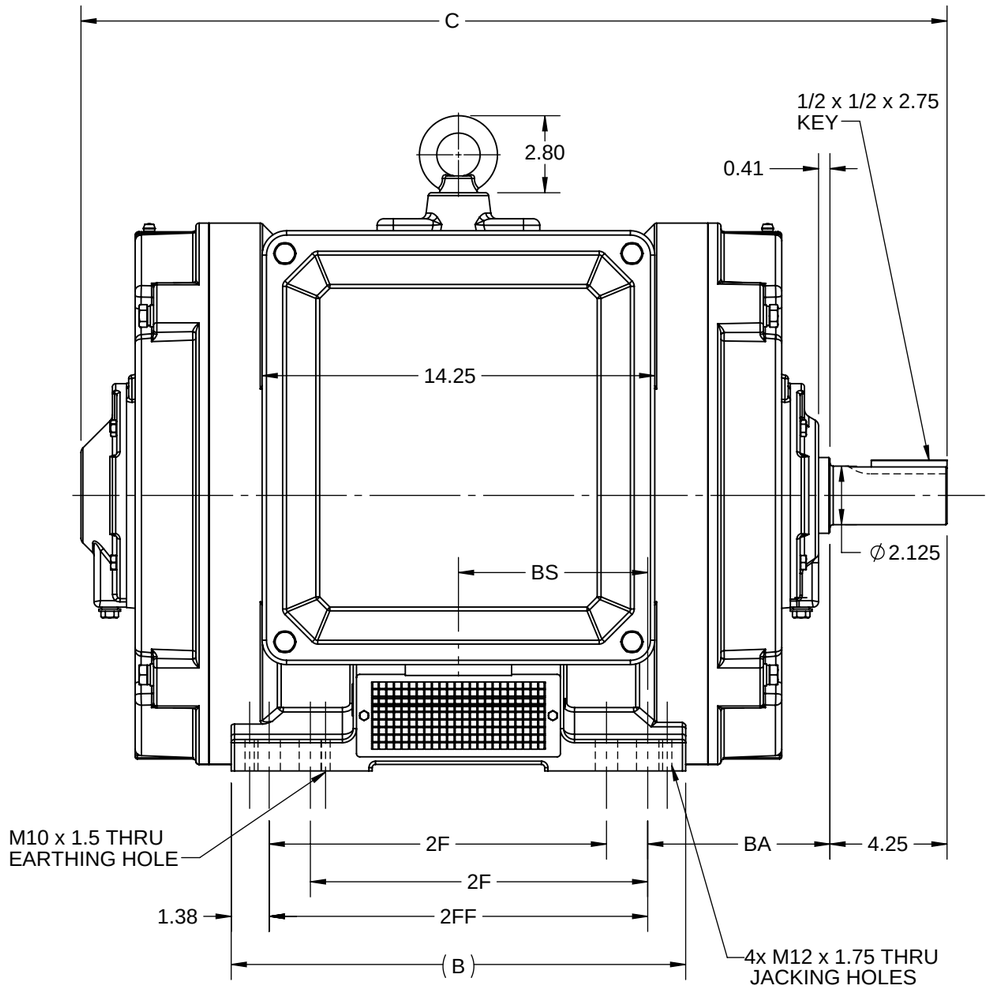


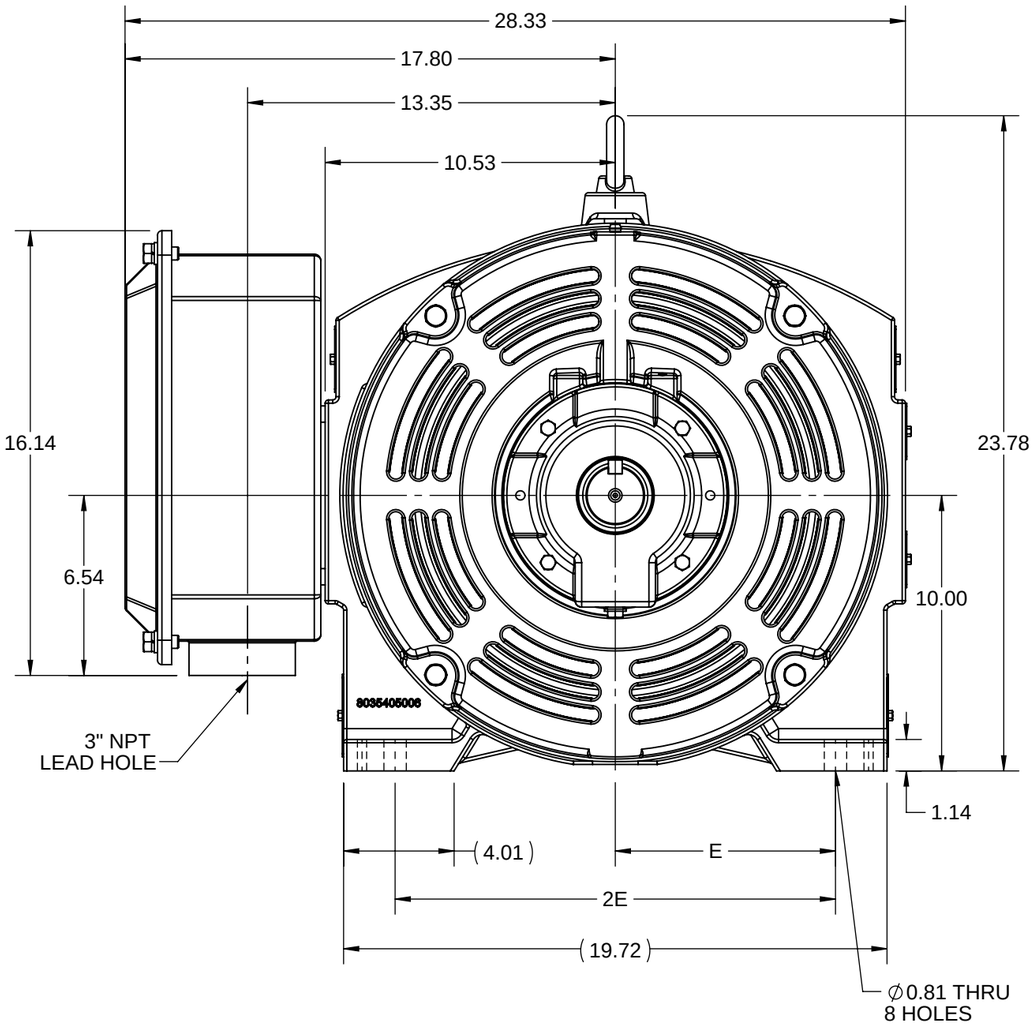


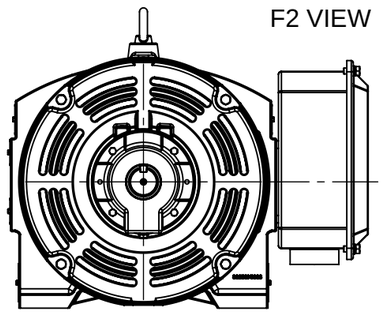


| DRAWING REVISION | REVISION BY | REV DATE/© DATE |
|---|---|---|
| C | SB | 05/29/2026 |
| REQUEST NUMBER | APPROVED BY | DATE |
| CR-0026424 | RMS | 05/29/2026 |

REQUEST NUMBER DESCRIPTION
DRAWING TITLE BLOCK UPDATED

COPYRIGHT (PER REVISION DATE) MARATHON ELECTRIC, LLC. ALL RIGHTS RESERVED. PROPRIETARY AND CONFIDENTIAL INFORMATION - THIS DOCUMENT IS THE PROPERTY OF MARATHON ELECTRIC, LLC. ("OWNER") AND CONTAINS OWNER'S PROPRIETARY INFORMATION. ANY PERSON, CORPORATION OR OTHER FIRM RECEIVING IT IS DEEMED, BY RECEIVING IT, TO AGREE THAT IT, AND/OR ANY PART OF IT, SHALL NOT BE DISCLOSED TO ANY PERSON, CORPORATION OR OTHER ENTITY, DUPLICATED, AND/OR USED, EXCEPT AS EXPRESSLY APPROVED IN WRITING IN ADVANCE BY OWNER. THIS DOCUMENT SHALL BE RETURNED TO OWNER UPON REQUEST. IT MAY BE SUBJECT TO CERTAIN RESTRICTIONS UNDER APPLICABLE EXPORT CONTROL LAWS AND REGULATIONS.

PRIMARY DIMENSIONS ARE INCH
mm DIMENSIONS IN [BRACKETS]
ARE FOR REFERENCE ONLY

| DRAWN BY | DESCRIPTION |
|---|---|
| VS | OUTLINE |
| DATE | 404/405TS FR NEMA ODP |
| 11/01/2019 | |
| APPROVED BY | |
| SBD | |
| DATE | |
| 11/01/2019 | |
| REFERENCE | MATERIAL / PROCESS/FINISH |
| THIRD ANGLE PROJECTION | SIZE B / DRAWING NUMBER SS620989 / SHEET 1 OF 1 |

marathon™

Uncontrolled Copy

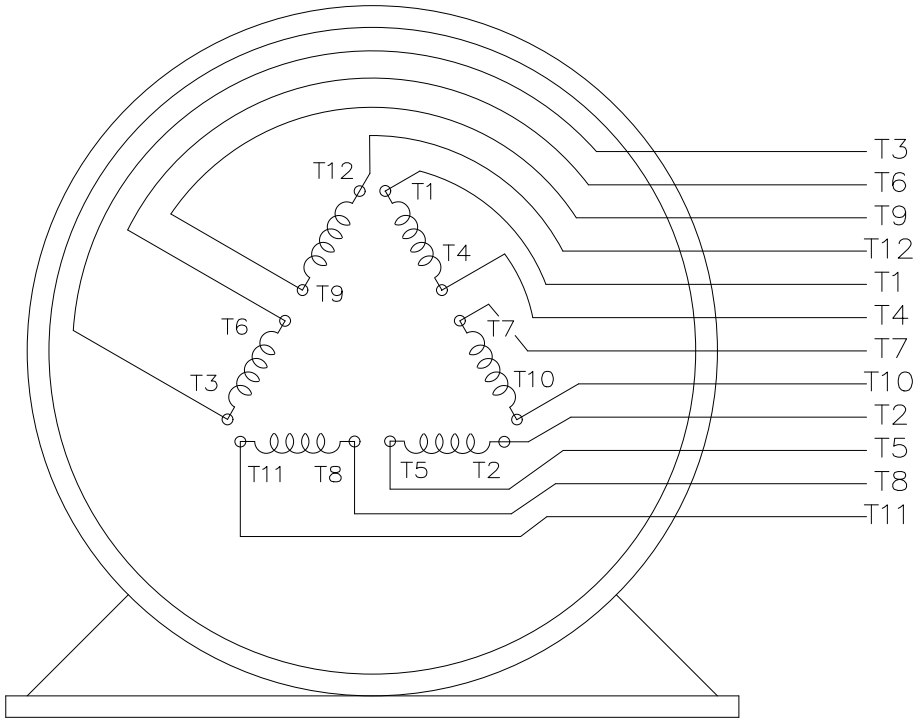


VIEW OF TERMINAL END

T12(W4)
T1(U1)
T6(W2)
T7(U3)
LINE 1

T2(V1)
T4(U2)
T8(V3)
T10(U4)
LINE 2

T3(W1)
T5(V2)
T9(W3)
T11(V4)
LINE 3

| | | |
|---|---|---|
| DRAWING REVISION: E | REVISION BY: SB | REV DATE/ © DATE: 08/04/2025 |
| REQUEST NUMBER: CR-0023654 | APPROVED BY: SBD | DATE: 08/04/2025 |
| REQUEST NUMBER DESCRIPTION: DRAWING TITLE BLOCK UPDATED | | |

COPYRIGHT (PER REVISION DATE) MARATHON ELECTRIC, LLC. ALL RIGHTS RESERVED.
PROPRIETARY AND CONFIDENTIAL INFORMATION - THIS DOCUMENT IS THE PROPERTY OF MARATHON ELECTRIC, LLC. ("OWNER") AND CONTAINS OWNER'S PROPRIETARY INFORMATION. ANY PERSON, CORPORATION OR OTHER FIRM RECEIVING IT IS DEEMED, BY RECEIVING IT, TO AGREE THAT IT, AND/OR ANY PART OF IT, SHALL NOT BE DISCLOSED TO ANY PERSON, CORPORATION OR OTHER ENTITY, DUPLICATED, AND/OR USED, EXCEPT AS EXPRESSLY APPROVED IN WRITING IN ADVANCE BY OWNER. THIS DOCUMENT SHALL BE RETURNED TO OWNER UPON REQUEST. IT MAY BE SUBJECT TO CERTAIN RESTRICTIONS UNDER APPLICABLE EXPORT CONTROL LAWS AND REGULATIONS.

PRIMARY DIMENSIONS ARE INCH
mm DIMENSIONS IN [BRACKETS]
ARE FOR REFERENCE ONLY

| | | |
|---|---|---|
| DRAWN BY: RJW | marathon™ | |
| DATE: 02/11/2005 | | |
| APPROVED BY: GK | DESCRIPTION: CONNECTION DIAGRAM<br>12 LEAD - SINGLE VOLTAGE | |
| DATE: 02/11/2005 | | |
| REFERENCE | MATERIAL | PROCESS/FINISH |
| THIRD ANGLE PROJECTION | SIZE: A / DRAWING NUMBER: EE7300BH | SHEET: 1 OF 1 |