Fire Pump Motors

Model No: 404TSTDS14008
Catalog No: U531

Fire Pump Motor, 125 HP, 3 Ph, 60 Hz, 200/400 V, 3600 RPM, 404TS Frame, DP

©2026 Marathon, All Rights Reserved.

marathon®

Product Information Packet: Model No: 404TSTDS14008, Catalog No: U531 Fire Pump Motor, 125 HP, 3 Ph, 60 Hz, 200/400 V, 3600 RPM, 404TS Frame, DP

Nameplate Specifications

Phase	**3**	Output HP	**125 Hp**
Output KW	**93.0 kW**	Voltage	**200/400 V**
Speed	**3560 r/min**	Synchronous RPM	**3600 r/min**
Service Factor	**1.15**	Frame	**404TS**
Enclosure	**Drip Proof**	Thermal Protection	**No Protection**
Efficiency	**93.6 %**	Ambient Temperature	**50 °C**
Frequency	**60 Hz**	Current	**327.0/163.0 A**
Power Factor	**88**	Duty	**Continuous**
Insulation Class	**F**	Design Code	**B**
KVA Code	**F**	Drive End Bearing Size	**6313**
Opp Drive End Bearing Size	**6313**	UL	**No**
CSA	**Y**	CE	**Y**
IP Code	**22**		

Technical Specifications

Electrical Type	**Squirrel Cage Induction Run**	Starting Method	**Part Wdg Start Low Volt Only & Wye Start Delta Run**
Poles	**2**	Rotation	**Reversible**
Resistance Main	**.055 O**	Mounting	**Rigid Base**
Motor Orientation	**Horizontal**	Drive End Bearing	**Ball**
Opp Drive End Bearing	**Ball**	Frame Material	**Cast Iron**
Shaft Type	**TS**	Overall Length	**29.5 in**
Frame Length	**15.5 in**	Shaft Diameter	**2 1/8 in**
Shaft Extension	**4.49 in**	Assembly/Box Mounting	**F1/F2 Capable**

Drawings

Connection Drawing	**A-EE7308AA**	Outline Drawing	**B-SS511744-1550**

This is an uncontrolled document once printed or downloaded and is subject to change without notice. Date Created: 29/10/2026

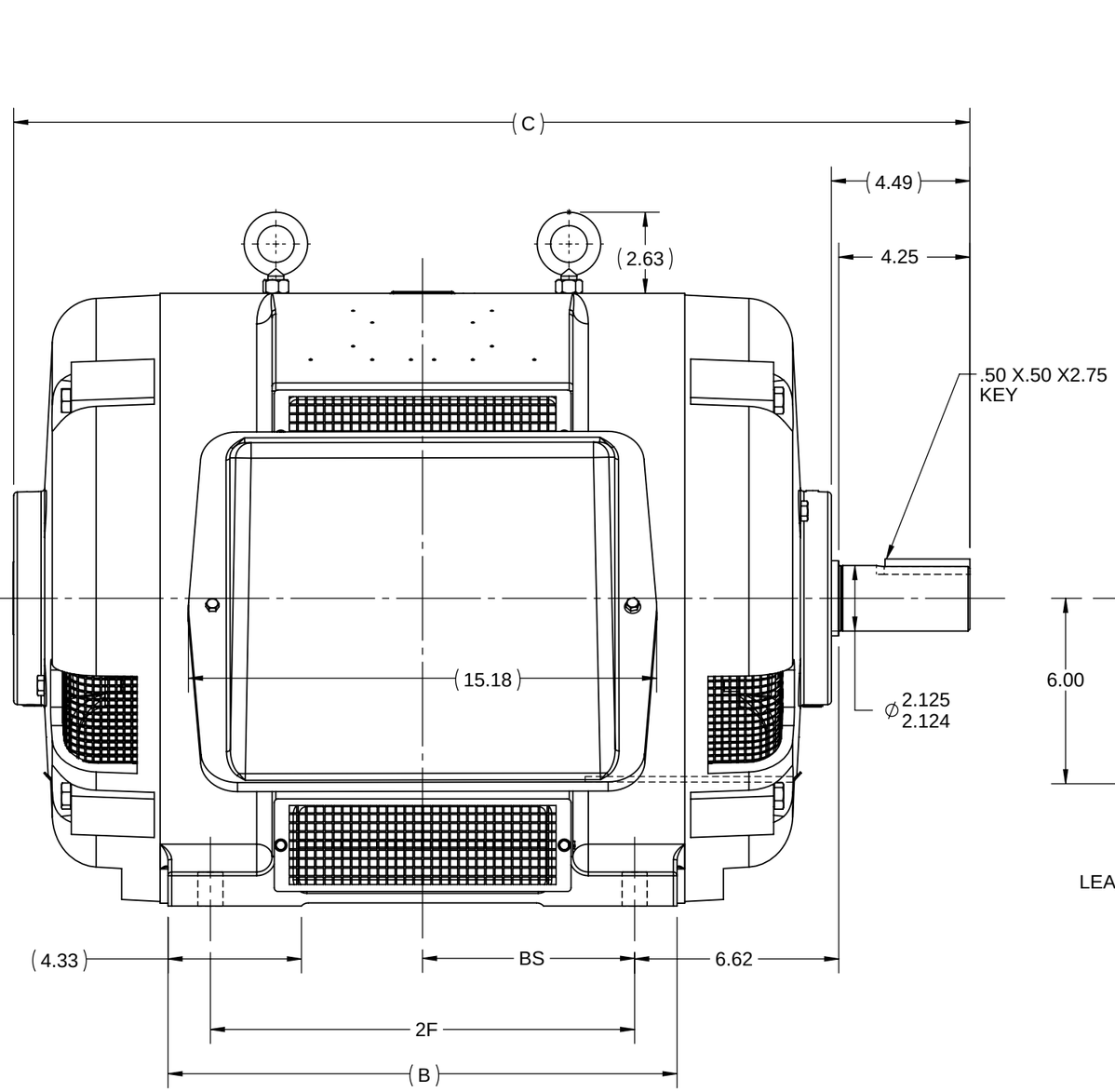

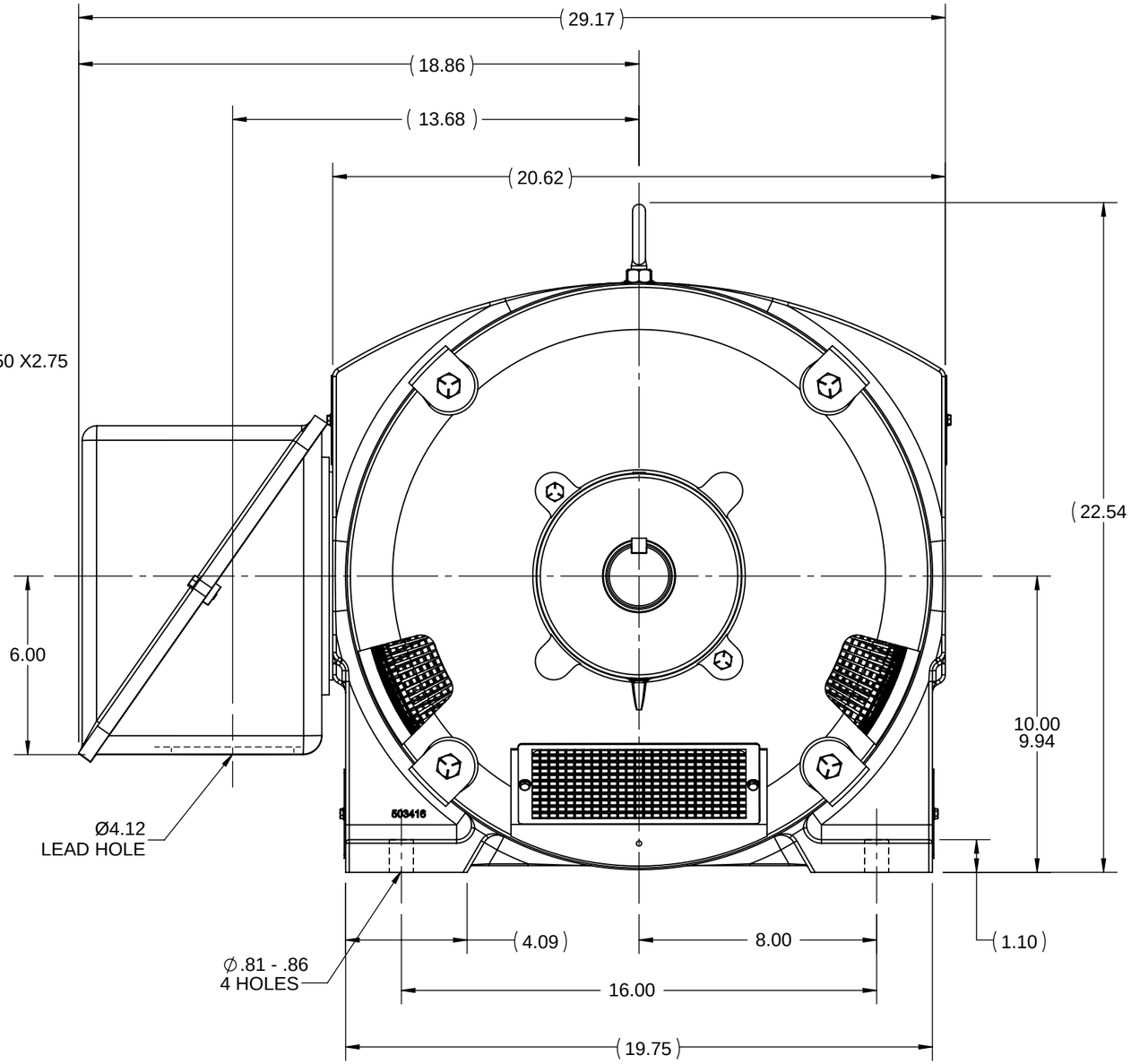

NOTES:
1. CONDUIT BOX CAN BE ROTATED IN 90° STEPS.
2. CONDUIT BOX CAN BE MOUNTED ON OPPOSITE SIDE BY REMOVING BRACKETS AND TURNING FRAME 180°.
3. NAMEPLATES TO BE READ FROM CONDUIT BOX SIDE OF MOTOR.

DASH	FRAME	B	C	2F	BS
1550	404TS	15.00	29.50	12.25	6.12
1700	405TS	16.50	31.00	13.75	6.88

DRAWING REVISION	REVISION BY	REV DATE/© DATE
D	SV	06/12/2026
REQUEST NUMBER	APPROVED BY	DATE
CR-0026596	RMS	06/12/2026

REQUEST NUMBER DESCRIPTION
DRAWING TITLE BLOCK UPDATED

COPYRIGHT (PER REVISION DATE) MARATHON ELECTRIC, LLC. ALL RIGHTS RESERVED. PROPRIETARY AND CONFIDENTIAL INFORMATION - THIS DOCUMENT IS THE PROPERTY OF MARATHON ELECTRIC, LLC. ("OWNER") AND CONTAINS OWNER'S PROPRIETARY INFORMATION. ANY PERSON, CORPORATION OR OTHER FIRM RECEIVING IT IS DEEMED, BY RECEIVING IT, TO AGREE THAT IT, AND/OR ANY PART OF IT, SHALL NOT BE DISCLOSED TO ANY PERSON, CORPORATION OR OTHER ENTITY, DUPLICATED, AND/OR USED, EXCEPT AS EXPRESSLY APPROVED IN WRITING IN ADVANCE BY OWNER. THIS DOCUMENT SHALL BE RETURNED TO OWNER UPON REQUEST. IT MAY BE SUBJECT TO CERTAIN RESTRICTIONS UNDER APPLICABLE EXPORT CONTROL LAWS AND REGULATIONS.

TOLERANCES (EXCEPT AS NOTED):

DEC.	INCH	mm	ANGLE
.X	±0.1	[±3]	±0.5°
.XX	±0.01	[±0.3]	
.XXX	±0.005	[±0.13]	
.XXXX	±0.0005	[±0.013]	

REMOVE BURRS & BREAK SHARP EDGES: .003/.015 [.08/.38] X 45°
CORNER FILLETS: R.02 [.5]
MACHINED SURFACES: 125 / 3.2 / INCH mm
mm DIMENSIONS IN [BRACKETS] ARE FOR REFERENCE ONLY

DRAWN BY	
TLB	
DATE	
06-16-1982	
APPROVED BY	
GK	
DATE	
06-16-1982	
REFERENCE	MATERIAL / PROCESS/FINISH
THIRD ANGLE PROJECTION	SIZE B / DRAWING NUMBER SS511744 / SHEET 1 OF 1

marathon™

DESCRIPTION
OUTLINE
400TS FR - DR. PR. - (STD) SCREENED