marathon®

Fire Pump Motors

Model No: 404TSTDCD4018
Catalog No: U530B

Fire Pump Motor, 125 & 100 HP, 3 Ph, 60 & 50 Hz, 460 & 380 V, 3600 RPM, 404TS Frame, DP

©2026 Marathon, All Rights Reserved.

marathon®

Product Information Packet: Model No: 404TSTDCD4018, Catalog No: U530B Fire Pump Motor, 125 & 100 HP, 3 Ph, 60 & 50 Hz, 460 & 380 V, 3600 RPM, 404TS Frame, DP

Nameplate Specifications

Phase	**3**	Output HP	**125 & 100 Hp**
Output KW	**93.0 & 75.0 kW**	Voltage	**460 & 380 V**
Speed	**3573 & 2974 r/min**	Synchronous RPM	**3600 & 3000 r/min**
Service Factor	**1.15 & 1.15**	Frame	**404TS**
Enclosure	**Drip Proof**	Thermal Protection	**No Protection**
Efficiency	**93.6 & 92.9 %**	Ambient Temperature	**50 °C**
Frequency	**60 & 50 Hz**	Current	**139 & 135 A**
Power Factor	**89.7**	Duty	**Continuous**
Insulation Class	**F**	Design Code	**B**
KVA Code	**G**	Drive End Bearing Size	**6314**
Opp Drive End Bearing Size	**6314**	UL	**Listed**
CSA	**Y**	CE	**Y**
IP Code	**23**	Number of Speeds	**1**

Technical Specifications

Electrical Type	**Squirrel Cage Induction Run**	Starting Method	**Part Wdg Start & Wye Start Delta Run**
Poles	**2**	Rotation	**Reversible**
Resistance Main	**.0729 O**	Mounting	**Rigid Base**
Motor Orientation	**Horizontal**	Drive End Bearing	**Ball**
Opp Drive End Bearing	**Ball**	Frame Material	**Cast Iron**
Shaft Type	**TS**	Shaft Diameter	**2.125 in**
Assembly/Box Mounting	**F1/F2 Capable**		

Drawings

Connection Drawing	**EE7300BH**	Outline Drawing	**SS620909**

This is an uncontrolled document once printed or downloaded and is subject to change without notice. Date Created: 16/10/2026

Uncontrolled Copy

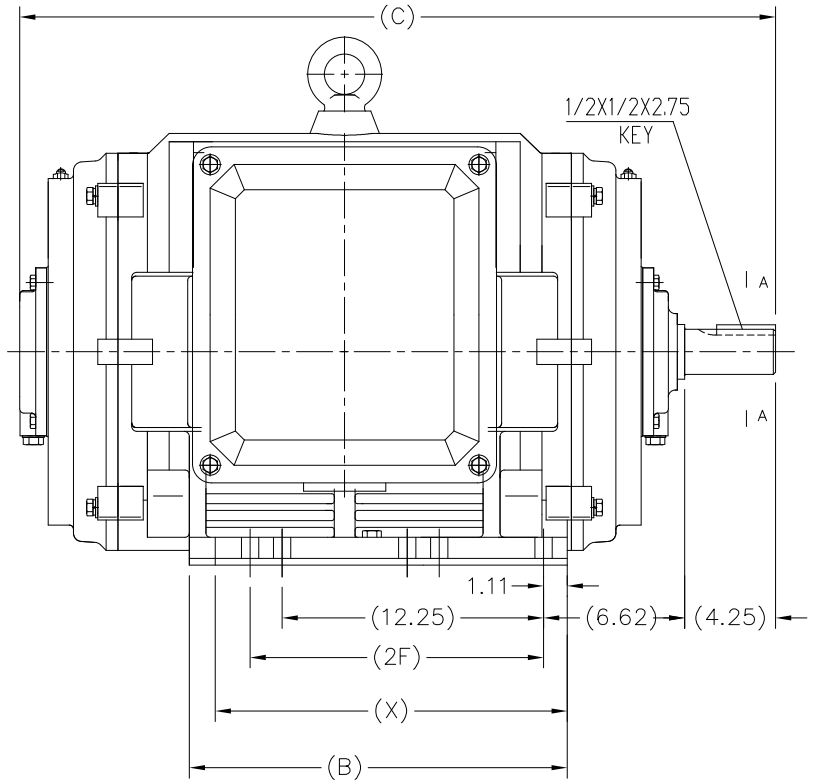

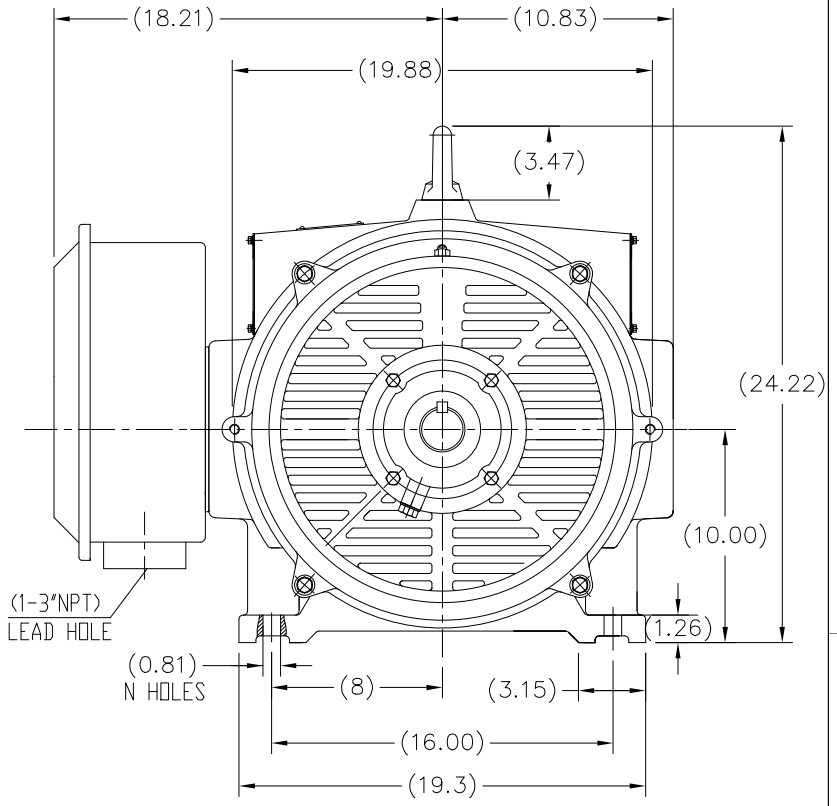

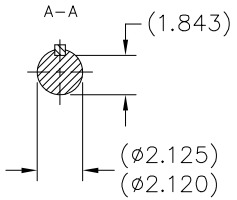

F2 MOUNTING

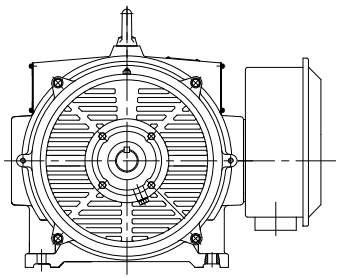

404TS	33.86	16.22	N/A	15.00
405TS	35.44	17.72	13.75	16.50
Frame	C	B	2F	X

DRAWING REVISION: B	REVISION BY: SB	REV DATE/ © DATE: 08/21/2025	
REQUEST NUMBER: CR-0023600	APPROVED BY: SBD	DATE: 08/21/2025	
REQUEST NUMBER DESCRIPTION: DRAWING TITLE BLOCK UPDATED			

COPYRIGHT (PER REVISION DATE) MARATHON ELECTRIC, LLC. ALL RIGHTS RESERVED.
PROPRIETARY AND CONFIDENTIAL INFORMATION - THIS DOCUMENT IS THE PROPERTY OF MARATHON ELECTRIC, LLC. ("OWNER") AND CONTAINS OWNER'S PROPRIETARY INFORMATION. ANY PERSON, CORPORATION OR OTHER FORM RECEIVING IT IS DEEMED, BY RECEIVING IT, TO AGREE THAT IT, AND/OR ANY PART OF IT, SHALL NOT BE DISCLOSED TO ANY PERSON, CORPORATION OR OTHER ENTITY, DUPLICATED, AND/OR USED, EXCEPT AS EXPRESSLY APPROVED IN WRITING IN ADVANCE BY OWNER. THIS DOCUMENT SHALL BE RETURNED TO OWNER UPON REQUEST. IT MAY BE SUBJECT TO CERTAIN RESTRICTIONS UNDER APPLICABLE EXPORT CONTROL LAWS AND REGULATIONS.

TOLERANCES (EXCEPT AS NOTED):

DEC.	INCH	mm	ANGLE
.X	± 0.1	± [1]	± 7' 30"
.XX	± 0.03	± [0.8]	
.XXX	± 0.005	± [0.13]	
.XXXX	± 0.0005	[± 0.013]	

REMOVE BURRS & BREAK SHARP EDGES: .003/.015 [.08/.38] X 45°
CORNER FILLETS: R.02 [.5]
MACHINED SURFACES: 200 / INCH 51
mm DIMENSIONS IN [BRACKETS] ARE FOR REFERENCE ONLY

DRAWN BY: NK			
DATE: 04/15/2019			
APPROVED BY: VY			
DATE: 04/15/2019			
REFERENCE: SS620752	MATERIAL	PROCESS/FINISH	
THIRD ANGLE PROJECTION	SIZE: B	DRAWING NUMBER: SS620909	SHEET: 1 OF 1

marathon™

DESCRIPTION: OUTLINE
404/405 TS FR - ODP - CAST IRON

Uncontrolled Copy

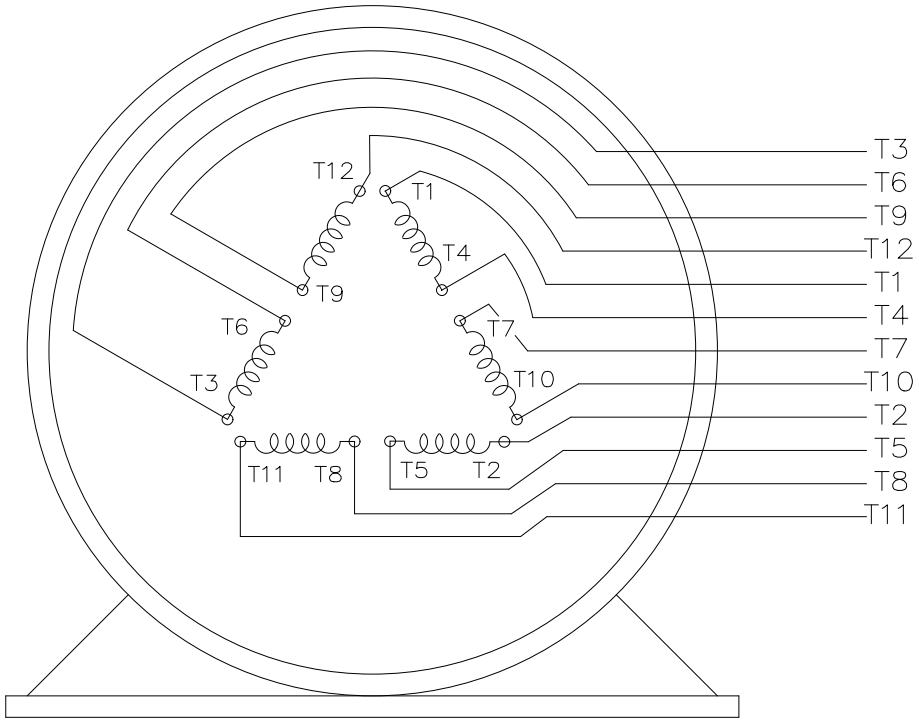

VIEW OF TERMINAL END

T12(W4)
T1(U1)
T6(W2)
T7(U3)
LINE 1

T2(V1)
T4(U2)
T8(V3)
T10(U4)
LINE 2

T3(W1)
T5(V2)
T9(W3)
T11(V4)
LINE 3

DRAWING REVISION: E	REVISION BY: SB	REV DATE/ © DATE: 08/04/2025
REQUEST NUMBER: CR-0023654	APPROVED BY: SBD	DATE: 08/04/2025
REQUEST NUMBER DESCRIPTION: DRAWING TITLE BLOCK UPDATED		

COPYRIGHT (PER REVISION DATE) MARATHON ELECTRIC, LLC. ALL RIGHTS RESERVED.
PROPRIETARY AND CONFIDENTIAL INFORMATION - THIS DOCUMENT IS THE PROPERTY OF MARATHON ELECTRIC, LLC. ("OWNER") AND CONTAINS OWNER'S PROPRIETARY INFORMATION. ANY PERSON, CORPORATION OR OTHER FIRM RECEIVING IT IS DEEMED, BY RECEIVING IT, TO AGREE THAT IT, AND/OR ANY PART OF IT, SHALL NOT BE DISCLOSED TO ANY PERSON, CORPORATION OR OTHER ENTITY, DUPLICATED, AND/OR USED, EXCEPT AS EXPRESSLY APPROVED IN WRITING IN ADVANCE BY OWNER. THIS DOCUMENT SHALL BE RETURNED TO OWNER UPON REQUEST. IT MAY BE SUBJECT TO CERTAIN RESTRICTIONS UNDER APPLICABLE EXPORT CONTROL LAWS AND REGULATIONS.

PRIMARY DIMENSIONS ARE INCH
mm DIMENSIONS IN [BRACKETS]
ARE FOR REFERENCE ONLY

DRAWN BY: RJW	marathon™	
DATE: 02/11/2005		
APPROVED BY: GK	DESCRIPTION: CONNECTION DIAGRAM 12 LEAD - SINGLE VOLTAGE	
DATE: 02/11/2005		
REFERENCE	MATERIAL	PROCESS/FINISH
THIRD ANGLE PROJECTION	SIZE: A / DRAWING NUMBER: EE7300BH	SHEET: 1 OF 1

Data Sheet

Date: 11/18/2022
Customer:
Attention:
Submitted by:

404TSTDCD4018

Submittal

Data @ 460 V

Motor Load Data

Load	0%	25%	50%	75%	100%	115%	125%	LR	
Current (Amps)	39.0	51.5	76.5	106	139	160	175	860	
Torque (ft-lb)	0.00	46.0	91.0	138	184	211	230	270	
RPM	3600	3593	3587	3580	3573	3,568	3565	0	
Efficiency (%)		89.8	93.3	93.9	93.6	93.2	92.9		
P.F. (%)	7.7	62.9	81.8	87.8	89.7	90.1	90.0	34.0	

Motor Speed Data

	LR	Pull-Up	BD	Rated	Idle
Speed (RPM)	0	1800	3450	3573	3600
Current (Amps)	860	690	500	139	39.0
Torque (ft-lb)	270	240	450	184	0.00

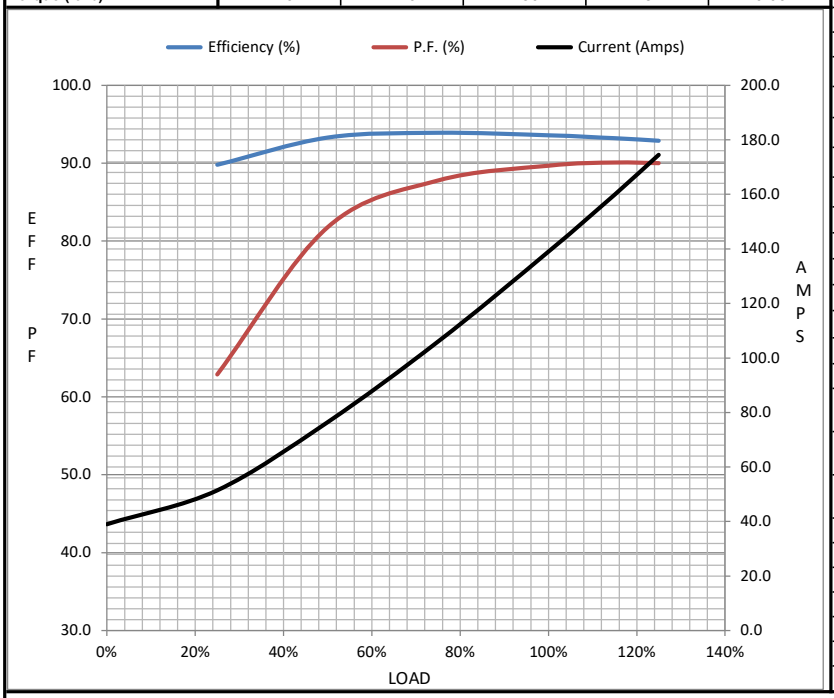

Information Block

HP	125.0
Sync. RPM	3600
Frame	405
Enclosure	DP
Construction	TDC
Voltage	460#380 V
Frequency	60 Hz
Design	B
LR Code letter	G
Service Factor	1.15
Temp Rise @ FL	70 ° C
Duty	CONT
Ambient	50 ° C
Elevation	3,300 feet
Rotor/Shaft wk²	14.1 Lb-Ft²
Ref Wdg	HA22502102 NONE
Sound Pressure @ 1M	80 dBA
VFD Rating	NONE
Outline Dwg	SS620909
Conn. Diag	EE7300BH
Additional Specifications:	
0	
0	

EQUIV CKT (OHMS / PHASE)

R1	R2	X1	X2	Xm
0.0440	0.0140	0.1970	0.1880	6.7160

Speed -Torque Curve

