marathon®

Fire Pump Motors

Model No: 404TSTDCD4005
Catalog No: U1430

Fire Pump Motor, 125 HP, 3 Ph, 50 Hz, 415 V, 3000 RPM, 404TS Frame, DP

©2026 Marathon, All Rights Reserved.

marathon®

Product Information Packet: Model No: 404TSTDCD4005, Catalog No: U1430 Fire Pump Motor, 125 HP, 3 Ph, 50 Hz, 415 V, 3000 RPM, 404TS Frame, DP

Nameplate Specifications

Phase	**3**	Output HP	**125 Hp**
Output KW	**93.0 kW**	Voltage	**415 V**
Speed	**2968 r/min**	Synchronous RPM	**3000 r/min**
Service Factor	**1.15**	Frame	**404TS**
Enclosure	**Drip Proof**	Thermal Protection	**No Protection**
Efficiency	**93 %**	Ambient Temperature	**50 °C**
Frequency	**50 Hz**	Current	**155.0 A**
Power Factor	**90.3**	Duty	**Continuous**
Insulation Class	**F**	Design Code	**B**
KVA Code	**F**	Drive End Bearing Size	**6314**
Opp Drive End Bearing Size	**6314**	UL	**Listed**
CSA	**Y**	CE	**Y**
IP Code	**22**	Number of Speeds	**1**

Technical Specifications

Electrical Type	**Squirrel Cage Induction Run**	Starting Method	**Part Wdg Start & Wye Start Delta Run**
Poles	**2**	Rotation	**Reversible**
Resistance Main	**.0794 O**	Mounting	**Rigid Base**
Motor Orientation	**Horizontal**	Drive End Bearing	**Ball**
Opp Drive End Bearing	**Ball**	Frame Material	**Cast Iron**
Shaft Type	**TS**	Shaft Diameter	**2.125 in**
Assembly/Box Mounting	**F1/F2 Capable**		

Drawings

Connection Drawing	**EE7300BH**	Outline Drawing	**SS620989**

This is an uncontrolled document once printed or downloaded and is subject to change without notice. Date Created: 15/10/2026

B	C	E	2E	2F	2FF	BA	BS	MOUNTING
16.85	31.44	8.00	16.00	12.25	13.75	6.62	6.87	F1 OR F2

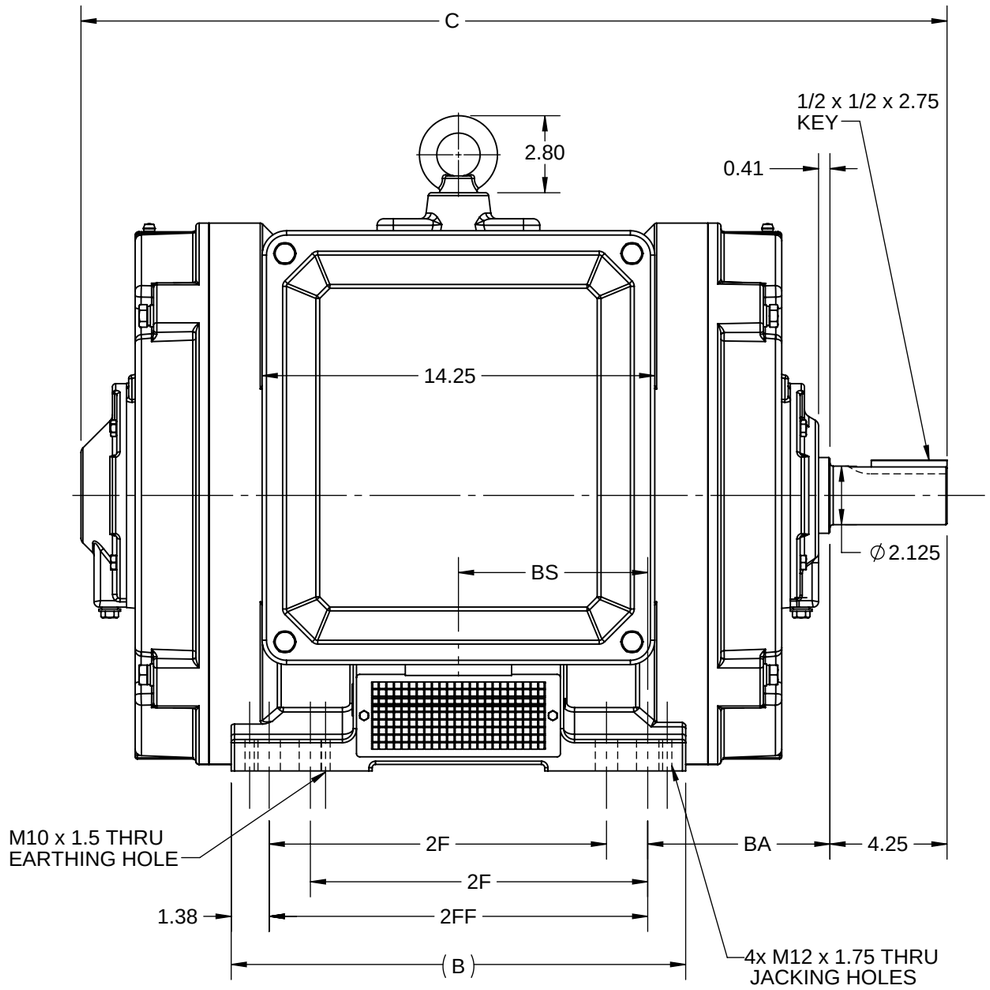

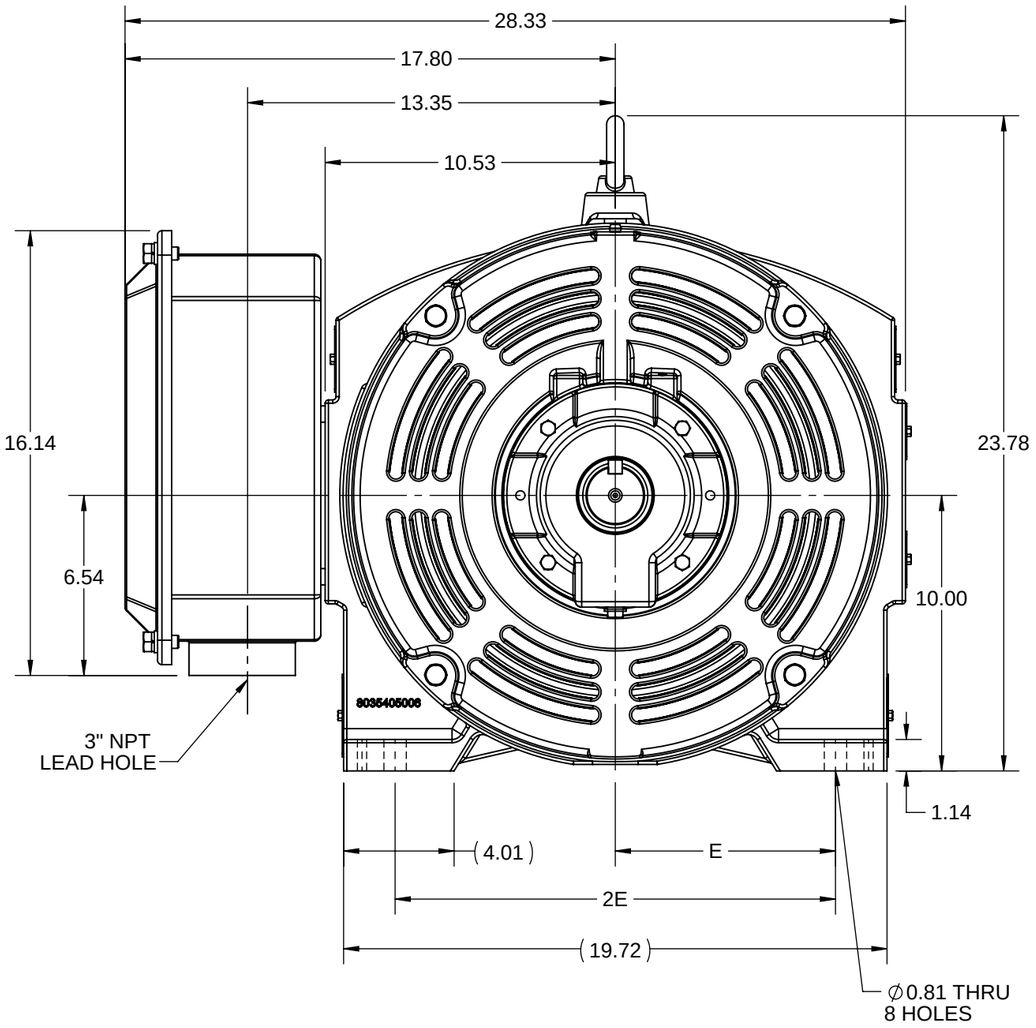

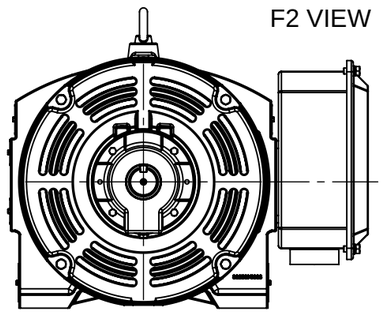

DRAWING REVISION	REVISION BY	REV DATE/© DATE
C	SB	05/29/2026
REQUEST NUMBER	APPROVED BY	DATE
CR-0026424	RMS	05/29/2026

REQUEST NUMBER DESCRIPTION
DRAWING TITLE BLOCK UPDATED

COPYRIGHT (PER REVISION DATE) MARATHON ELECTRIC, LLC. ALL RIGHTS RESERVED. PROPRIETARY AND CONFIDENTIAL INFORMATION - THIS DOCUMENT IS THE PROPERTY OF MARATHON ELECTRIC, LLC. ("OWNER") AND CONTAINS OWNER'S PROPRIETARY INFORMATION. ANY PERSON, CORPORATION OR OTHER FIRM RECEIVING IT IS DEEMED, BY RECEIVING IT, TO AGREE THAT IT, AND/OR ANY PART OF IT, SHALL NOT BE DISCLOSED TO ANY PERSON, CORPORATION OR OTHER ENTITY, DUPLICATED, AND/OR USED, EXCEPT AS EXPRESSLY APPROVED IN WRITING IN ADVANCE BY OWNER. THIS DOCUMENT SHALL BE RETURNED TO OWNER UPON REQUEST. IT MAY BE SUBJECT TO CERTAIN RESTRICTIONS UNDER APPLICABLE EXPORT CONTROL LAWS AND REGULATIONS.

PRIMARY DIMENSIONS ARE INCH
mm DIMENSIONS IN [BRACKETS]
ARE FOR REFERENCE ONLY

DRAWN BY	DESCRIPTION
VS	OUTLINE
DATE	404/405TS FR NEMA ODP
11/01/2019	
APPROVED BY	
SBD	
DATE	
11/01/2019	
REFERENCE	MATERIAL / PROCESS/FINISH
THIRD ANGLE PROJECTION	SIZE B / DRAWING NUMBER SS620989 / SHEET 1 OF 1

marathon™

Uncontrolled Copy

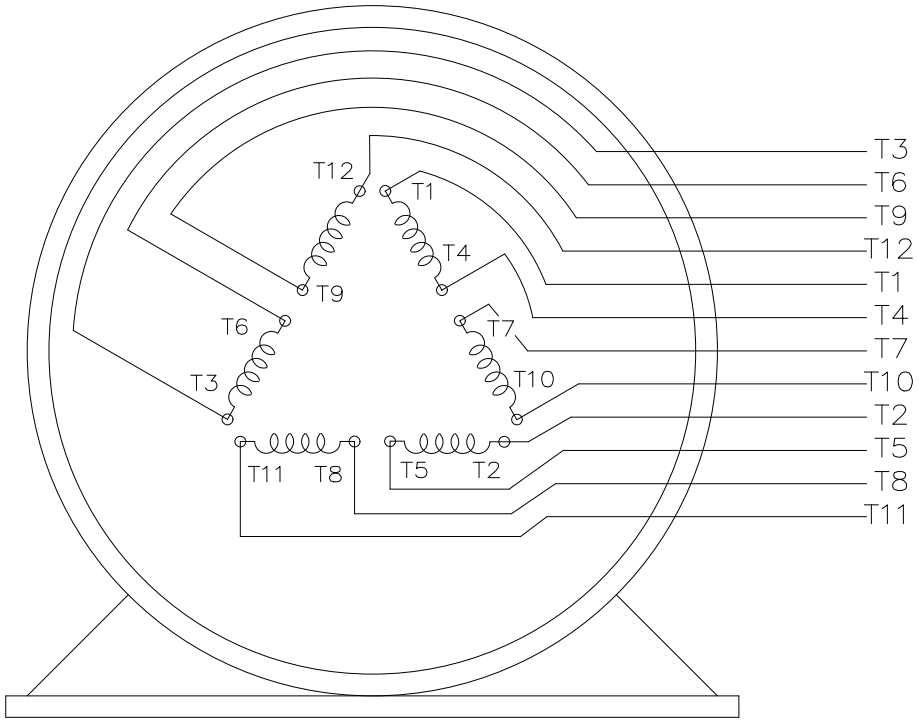

VIEW OF TERMINAL END

T12(W4)
T1(U1)
T6(W2)
T7(U3)
LINE 1

T2(V1)
T4(U2)
T8(V3)
T10(U4)
LINE 2

T3(W1)
T5(V2)
T9(W3)
T11(V4)
LINE 3

DRAWING REVISION: E	REVISION BY: SB	REV DATE/ © DATE: 08/04/2025
REQUEST NUMBER: CR-0023654	APPROVED BY: SBD	DATE: 08/04/2025
REQUEST NUMBER DESCRIPTION: DRAWING TITLE BLOCK UPDATED		

COPYRIGHT (PER REVISION DATE) MARATHON ELECTRIC, LLC. ALL RIGHTS RESERVED.
PROPRIETARY AND CONFIDENTIAL INFORMATION - THIS DOCUMENT IS THE PROPERTY OF MARATHON ELECTRIC, LLC. ("OWNER") AND CONTAINS OWNER'S PROPRIETARY INFORMATION. ANY PERSON, CORPORATION OR OTHER FIRM RECEIVING IT IS DEEMED, BY RECEIVING IT, TO AGREE THAT IT, AND/OR ANY PART OF IT, SHALL NOT BE DISCLOSED TO ANY PERSON, CORPORATION OR OTHER ENTITY, DUPLICATED, AND/OR USED, EXCEPT AS EXPRESSLY APPROVED IN WRITING IN ADVANCE BY OWNER. THIS DOCUMENT SHALL BE RETURNED TO OWNER UPON REQUEST. IT MAY BE SUBJECT TO CERTAIN RESTRICTIONS UNDER APPLICABLE EXPORT CONTROL LAWS AND REGULATIONS.

PRIMARY DIMENSIONS ARE INCH
mm DIMENSIONS IN [BRACKETS]
ARE FOR REFERENCE ONLY

DRAWN BY: RJW	marathon™	
DATE: 02/11/2005		
APPROVED BY: GK	DESCRIPTION: CONNECTION DIAGRAM 12 LEAD - SINGLE VOLTAGE	
DATE: 02/11/2005		
REFERENCE	MATERIAL	PROCESS/FINISH
THIRD ANGLE PROJECTION	SIZE: A / DRAWING NUMBER: EE7300BH	SHEET: 1 OF 1

Data Sheet

Date: 11/17/2021
Customer:
Attention:
Submitted by:

marathon® Motors

404TSTDCD4005

Submittal

Data @ 415 V

Motor Load Data

Load	0%	25%	50%	75%	100%	115%	125%	LR	
Current (Amps)	37.9	52.5	81.6	116	155	180	197	790	
Torque (ft-lb)	0.00	54.9	110	165	221	255	278	263	
RPM	3000	2993	2985	2977	2968	2,962	2958	0	
Efficiency (%)		91.9	94.0	93.9	93.0	92.3	91.7		
P.F. (%)	6.4	67.2	84.5	89.2	90.3	90.1	89.8	35.0	

Motor Speed Data

	LR	Pull-Up	BD	Rated	Idle
Speed (RPM)	0	1500	2860	2968	3000
Current (Amps)	790	630	465	155	37.9
Torque (ft-lb)	263	225	452	221	0.00

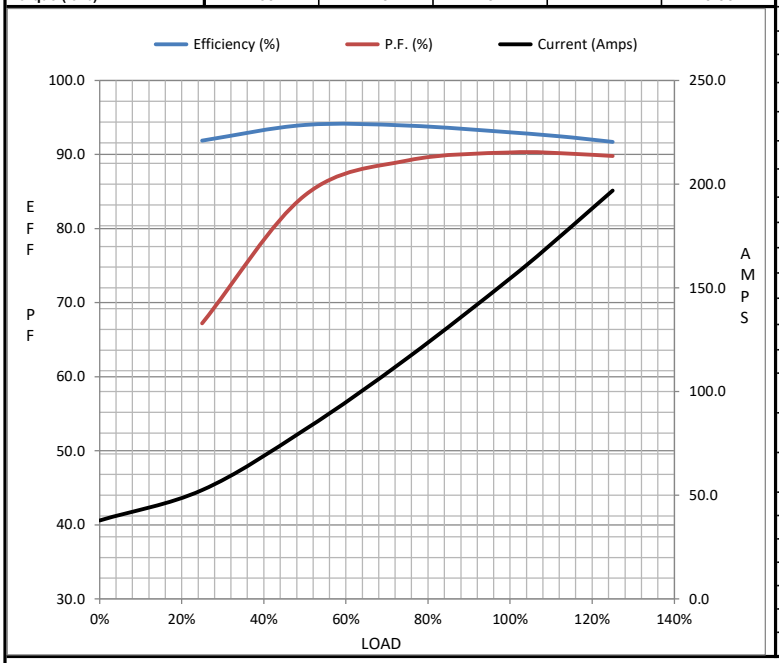

Information Block

HP	125.0	
Sync. RPM	3000	
Frame	404	
Enclosure	DP	
Construction	TDC	
Voltage	415	V
Frequency	50	Hz
Design	B	
LR Code letter	F	
Service Factor	1.15	
Temp Rise @ FL	75	° C
Duty	CONT	
Ambient	40	° C
Elevation	3,300	feet
Rotor/Shaft wk²	14.11	Lb-Ft²
Ref Wdg	HA22502105 NONE	
Sound Pressure @ 1M	62	dBA
VFD Rating	NONE	
Outline Dwg	SS620989	
Conn. Diag	EE7300BH	
Additional Specifications:		
0		
0		

EQUIV CKT (OHMS / PHASE)

R1	R2	X1	X2	Xm
0.0000	0.0000	0.0000	0.0000	0.0000

Speed -Torque Curve

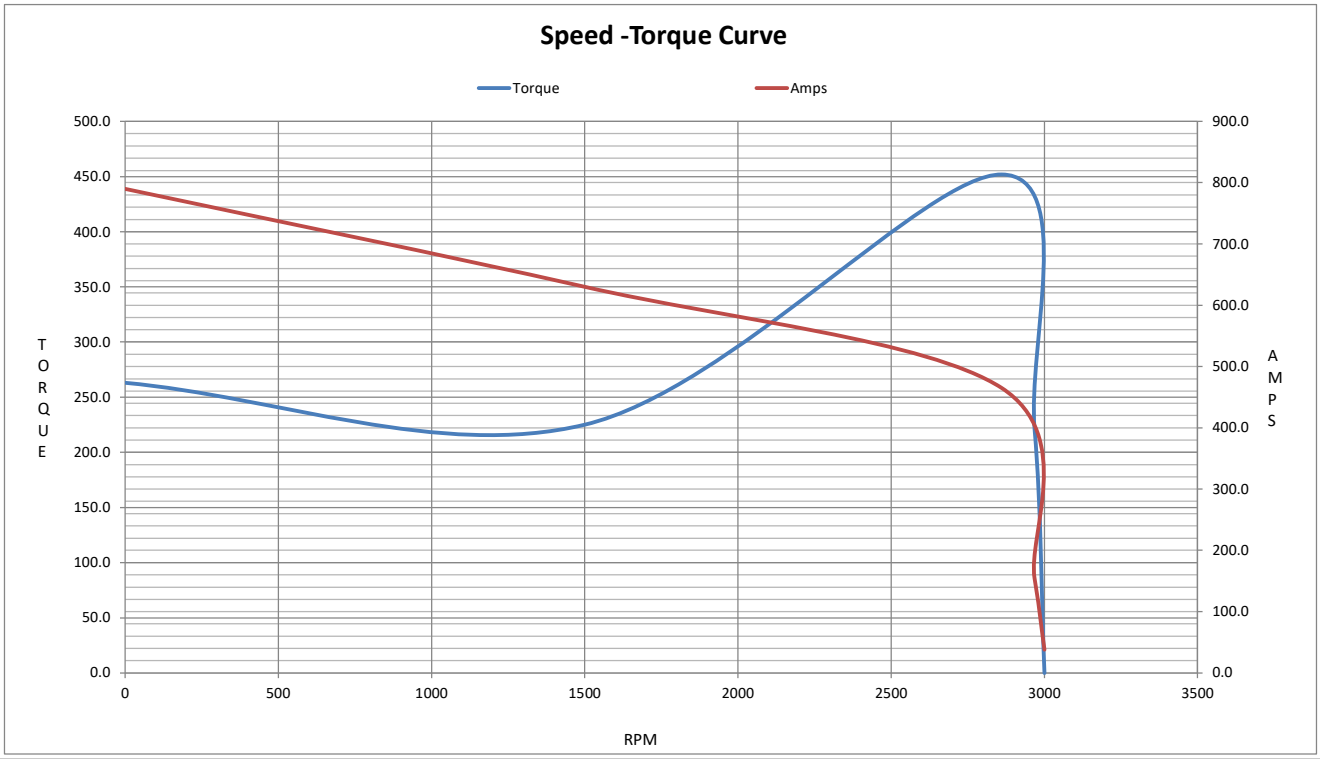

P.O. BOX 8003
WAUSAU, WI 54401-8003
PH. 715-675-3311

marathon® Motors

DATA VOLTS: 415

CERTIFICATION DATA SHEET

CUSTOMER:
ORDER #:
CONN. DIAGRAM: EE7300BH
OUTLINE: SS620989
WINDING: HA22502105 NONE 1
SPEED:

CUSTOMER P.O. #:
REFERENCE MODEL #: 404TSTDCD4005
CAT #: U1430
CUSTOMER PART #:
MOUNTING: F1/F2 CAPABLE

TYPICAL MOTOR PERFORMANCE DATA

HP	KW	SYNC RPM	FL RPM	FRAME	ENCLOSURE	TYPE	KVA CODE	DESIGN
125	93	3000	2968	404TS	DP	TDC	F	B

PH	HZ	VOLTS	AMPS	START TYPE	DUTY	INSL	S.F.	AMB	ELEV.
3	50	415	155	PWS & YDRUN	CONT	F	1.15	50	3300

F.L. EFF	93.0	3/4 LD EFF	93.9	1/2 LD EFF	94.0	GTD EFF	ELECT. TYPE
F.L. PF	90.3	3/4 LD PF	89.2	1/2 LD PF	84.5	88.5	SQ CAGE IND RUN

F.L. TORQUE	LR AMPS @ 460 V	L.R. TORQUE	B.D. TORQUE	F.L. RISE (° C)	
221 LB-FT	790	263 LB-FT 119%	452 LB-FT 205%	75	

SOUND PRESSURE @ 3 FT.	SOUND POWER	ROTOR WK²	MAX. LOAD WK²	SAFE STALL TIME	STARTS/HOUR	APROX. MOTOR WGT
62 dBA	71 dBA	14.11 LB-FT²	45 LB-FT²	15 SEC.	2	1080 LB.

*** SUPPLEMENTAL INFORMATION ***

DE BRACKET TYPE	ODE BRACKET TYPE	MOUNT TYPE	MOTOR ORIENTATION	SEVERE DUTY	HAZARDOUS LOCATION	DRIP COVER	SCREENS	PAINT
STANDARD	STANDARD	RIGID	HORIZONTAL	NO	NONE	YES	RODENT	RED (ENAMEL)

BEARINGS DE	BEARINGS ODE	GREASE	SHAFT TYPE	SPECIAL DE	SPECIAL ODE	SHAFT MATERIAL	FRAME MATERIAL
BALL	BALL	POLYREX EM	TS	NONE	NONE	1045 HOT ROLLED (C-204)	CAST IRON
6314	6314						

THERMOSTATS	PROTECTORS	WDG RTD's	BRG RTD's	THERMISTORS	CONTROL	SPACE HEATERS
NONE	NOT	NONE	NONE	NONE	FALSE	NA

R1 (ohms/ph)	R2 (ohms/ph)	X1 (ohms/ph)	X2 (ohms/ph)	Xm (ohms/ph)	VIBRATION (in/sec)	FLOAT
0	0	0	0	0	0.150	ODE

*
NOTES
*

INVERTER TORQUE: NONE
INV. HP SPEED RANGE: NONE

ENCODER: NONE
NONE
NONE NONE PPR

BRAKE: NONE
NONE NONE
FT-LB: NA
VOLTAGE: NONE HZ:

UL: NO LETTER - ALL BRANDS-UL LISTED FIRE PUMP MOTORS

PREPARED BY:
DATE: 11/17/2021

FORM: 3531 REV_4 2/27/06