marathon®

Explosion Proof Motors

Model No: 365TTGS16577
Catalog No: E571

Explosion Proof Motor, 50 HP, 3 Ph, 60 Hz, 230/460 V, 1200 RPM, 365T Frame, EPFC

©2026 Marathon, All Rights Reserved.

marathon®

Product Information Packet: Model No: 365TTGS16577, Catalog No: E571 Explosion Proof Motor, 50 HP, 3 Ph, 60 Hz, 230/460 V, 1200 RPM, 365T Frame, EPFC

Nameplate Specifications

Phase	**3**	Output HP	**50 Hp**
Output KW	**37.0 kW**	Voltage	**230/460 V**
Speed	**1182 r/min**	Synchronous RPM	**1200 r/min**
Service Factor	**1.00**	Frame	**365T**
Enclosure	**Explosion Proof Fan cooled**	Thermal Protection	**Thermostat**
Efficiency	**94.5 %**	Ambient Temperature	**50 °C**
Frequency	**60 Hz**	Current	**123.0/61.5 A**
Power Factor	**80.5**	Duty	**Continuous**
Insulation Class	**F**	Design Code	**B**
KVA Code	**G**	Drive End Bearing Size	**6314**
Opp Drive End Bearing Size	**6312**	UL	**UL Listed And CSA Certified**
CSA	**Y**	CE	**N**
IP Code	**54**	Number of Speeds	**1**
Hazardous Location	**DIV 1 EXP PROOF CL I GR CD CL II GR FG T3C**		

Technical Specifications

Electrical Type	**Squirrel Cage Inverter Rated**	Starting Method	**Line Or Inverter**
Poles	**6**	Rotation	**Reversible**
Resistance Main	**.12 O**	Mounting	**Rigid Base**
Motor Orientation	**Horizontal**	Drive End Bearing	**Ball**
Opp Drive End Bearing	**Ball**	Frame Material	**Cast Iron**
Shaft Type	**T**	Overall Length	**32.74 in**
Frame Length	**14.5 in**	Shaft Diameter	**2 3/8 in**
Shaft Extension	**6.12 in**	Assembly/Box Mounting	**F1 Only**
Inverter Load	**Constant 2:1/Variable 10:1**		

Drawings

Connection Drawing	**A-EE7308T**	Outline Drawing	**B-SS518459-1450**

This is an uncontrolled document once printed or downloaded and is subject to change without notice. Date Created: 15/10/2026

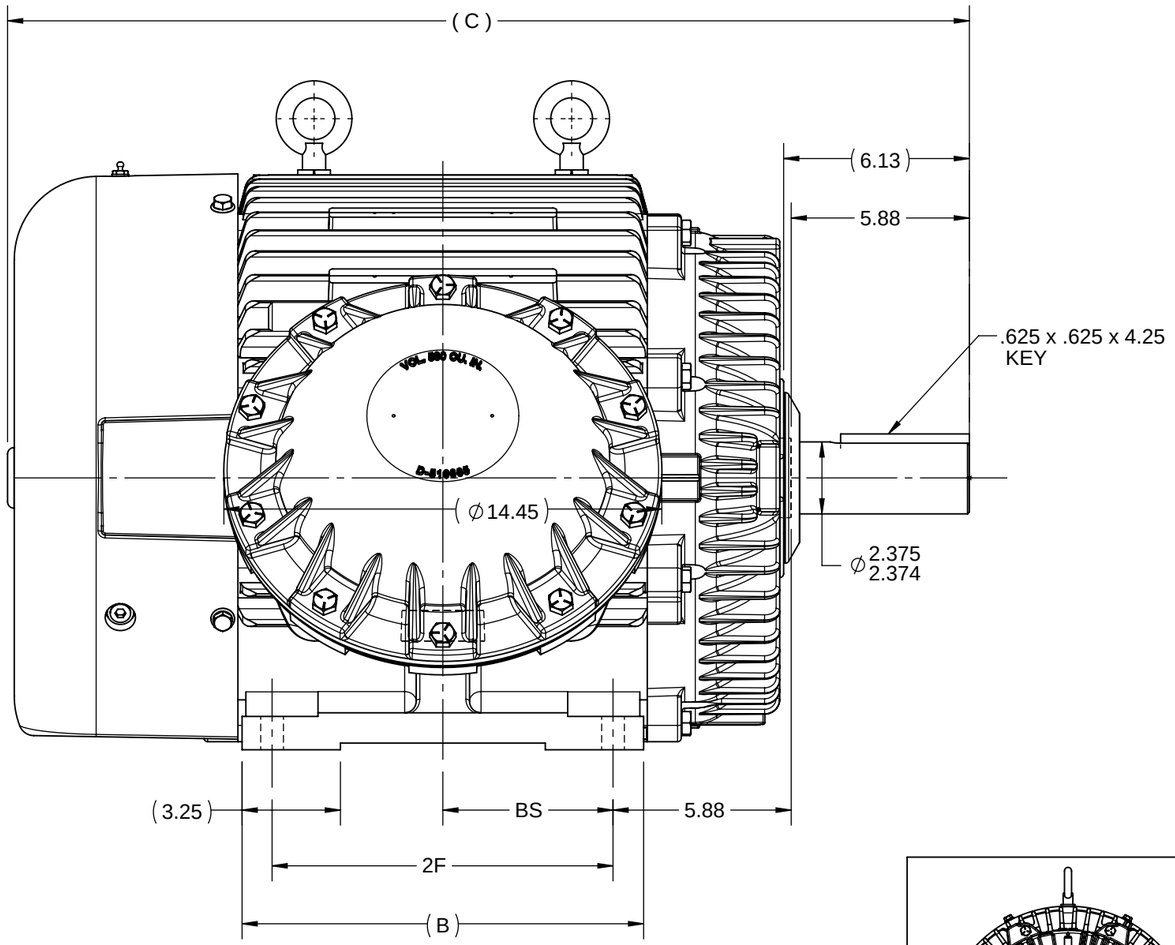

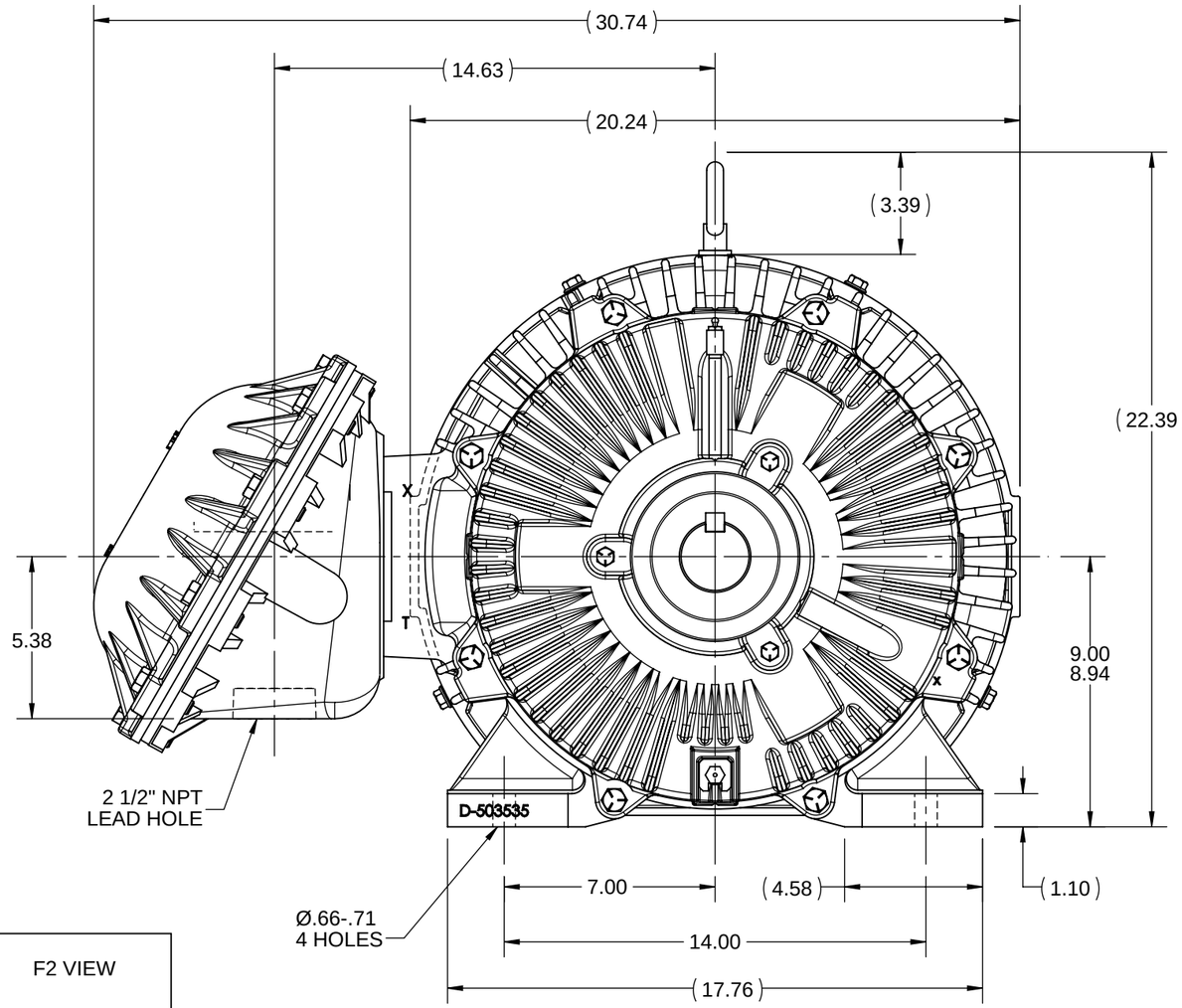

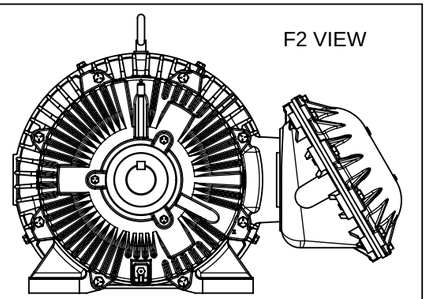

NOTES:
1. CONDUIT BOX CAN BE ROTATED IN 90° STEPS.
2. CONDUIT BOX CAN BE MOUNTED ON OPPOSITE SIDE BY REMOVING BRACKETS AND TURNING FRAME 180°.
3. NAMEPLATES TO BE READ FROM CONDUIT BOX SIDE OF MOTOR.

DASH	FRAME	B	C	2F	BS
1350	364T	13.25	31.74	11.25	5.62
1450	365T	14.25	32.74	12.25	6.12

DRAWING REVISION	REVISION BY	REV DATE/© DATE
H	SV	05/28/2026
REQUEST NUMBER	APPROVED BY	DATE
CR-0026424	RMS	05/28/2026

REQUEST NUMBER DESCRIPTION
DRAWING TITLE BLOCK UPDATED

COPYRIGHT (PER REVISION DATE) MARATHON ELECTRIC, LLC. ALL RIGHTS RESERVED. PROPRIETARY AND CONFIDENTIAL INFORMATION - THIS DOCUMENT IS THE PROPERTY OF MARATHON ELECTRIC, LLC. ("OWNER") AND CONTAINS OWNER'S PROPRIETARY INFORMATION. ANY PERSON, CORPORATION OR OTHER FIRM RECEIVING IT IS DEEMED, BY RECEIVING IT, TO AGREE THAT IT, AND/OR ANY PART OF IT, SHALL NOT BE DISCLOSED TO ANY PERSON, CORPORATION OR OTHER ENTITY, DUPLICATED, AND/OR USED, EXCEPT AS EXPRESSLY APPROVED IN WRITING IN ADVANCE BY OWNER. THIS DOCUMENT SHALL BE RETURNED TO OWNER UPON REQUEST. IT MAY BE SUBJECT TO CERTAIN RESTRICTIONS UNDER APPLICABLE EXPORT CONTROL LAWS AND REGULATIONS.

TOLERANCES (EXCEPT AS NOTED):

DEC.	INCH	mm	ANGLE
.X	±0.1	[±3]	±7' 30"
.XX	±0.03	[±0.8]	
.XXX	±0.005	[±0.13]	
.XXXX	±0.0005	[±0.013]	

REMOVE BURRS & BREAK SHARP EDGES: .003/.015 [.08/.38] X 45°
CORNER FILLETS: R.02 [.5]
MACHINED SURFACES: 200 / 5.1 / INCH / mm
mm DIMENSIONS IN [BRACKETS] ARE FOR REFERENCE ONLY

DRAWN BY	
TJB	
DATE	
05-14-2001	
APPROVED BY	
GK	
DATE	
09-07-2001	
REFERENCE	
THIRD ANGLE PROJECTION	

marathon™

DESCRIPTION
OUTLINE
360T FR. - EXP. PROOF

MATERIAL | PROCESS/FINISH

SIZE	DRAWING NUMBER	SHEET
B	SS518459	1 OF 1

HIGH VOLTAGE

(U1) T1 — L1
(V1) T2 — L2
(W1) T3 — L3
(U2) T4
(U3) T7
(V2) T5
(V3) T8
(W2) T6
(W3) T9

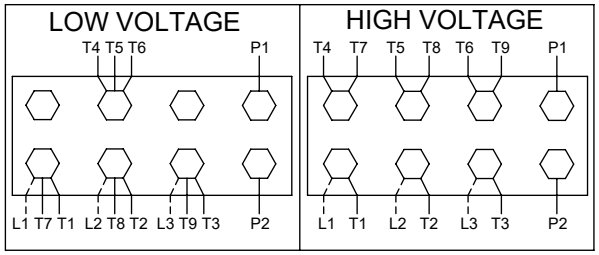

THREE PHASE
DUAL VOLTAGE MOTOR

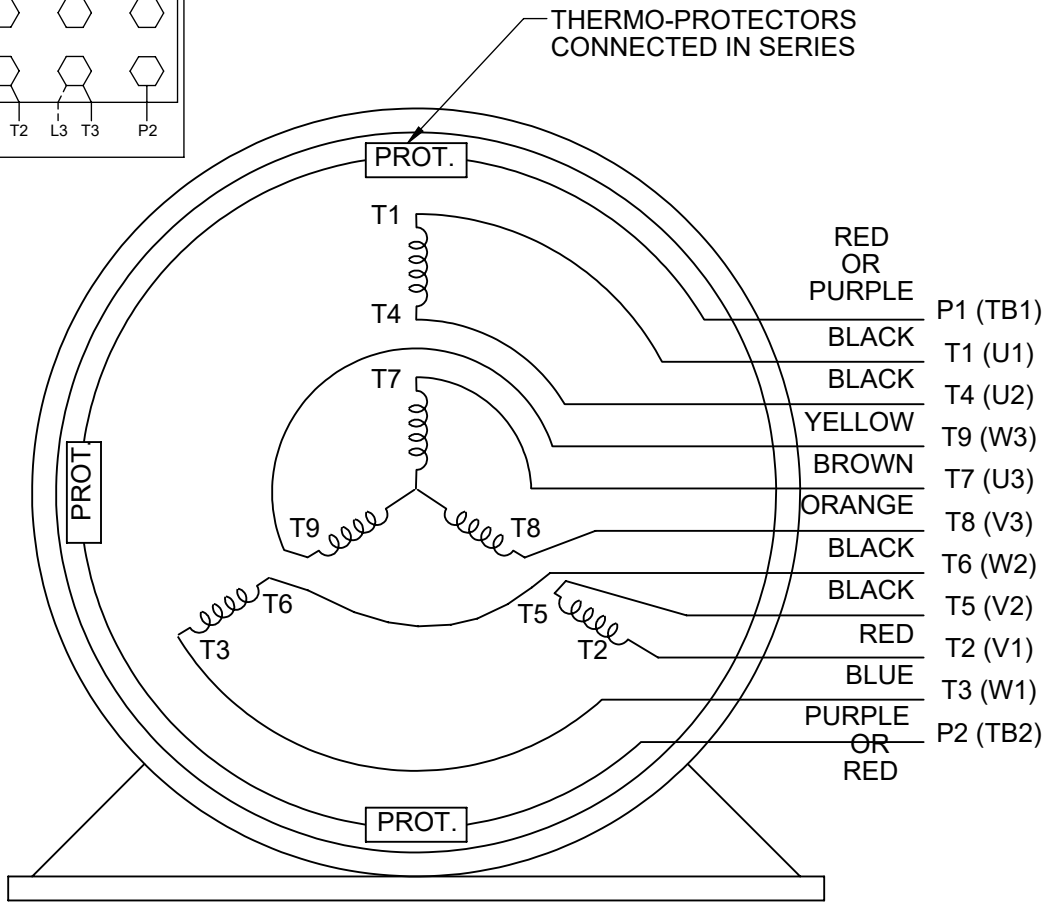

VIEW OF TERMINAL END

NOTE FOR FACTORY USE ONLY:
TO SURGE TEST FOR COMMON CONNECT:
HIGH VOLT: CONNECT P1 TO T1
THEN P2 TO L1
LOW VOLT: CONNECT P1 TO T1 & T7,
THEN P2 TO L1

LOW VOLTAGE

(U1) T1 — L1
(U3) T7 — L1
(V1) T2 — L2
(V3) T8 — L2
(W1) T3 — L3
(W3) T9 — L3
(U2) T4
(V2) T5
(W2) T6

NOTE: LEAD'S COLOR CAN BE YELLOW OR WHITE FOR IMG PLANT

DRAWING REVISION: U	REVISION BY: SB	REV DATE/© DATE: 08/01/2025	PRIMARY DIMENSIONS ARE INCH mm DIMENSIONS IN [BRACKETS] ARE FOR REFERENCE ONLY	DRAWN BY: SMC	marathon™
REQUEST NUMBER: CR-0023654	APPROVED BY: SBD	DATE: 08/01/2025		DATE: 05-13-1992	
REQUEST NUMBER DESCRIPTION: DRAWING TITLE BLOCK UPDATED				APPROVED BY: TB	DESCRIPTION: CONN DIAGRAM-EXTERNAL
				DATE: 05-13-1992	3 PHASE - DUAL VOLTAGE MOTOR
				REFERENCE: EE7308/EE7300	MATERIAL / PROCESS/FINISH
				THIRD ANGLE PROJECTION	SIZE: A — DRAWING NUMBER: EE7308T — SHEET: 1 OF 1

COPYRIGHT (PER REVISION DATE) MARATHON ELECTRIC, LLC. ALL RIGHTS RESERVED. PROPRIETARY AND CONFIDENTIAL INFORMATION - THIS DOCUMENT IS THE PROPERTY OF MARATHON ELECTRIC, LLC. ("OWNER") AND CONTAINS OWNER'S PROPRIETARY INFORMATION. ANY PERSON, CORPORATION OR OTHER FIRM RECEIVING IT IS DEEMED, BY RECEIVING IT, TO AGREE THAT IT, AND/OR ANY PART OF IT, SHALL NOT BE DISCLOSED TO ANY PERSON, CORPORATION OR OTHER ENTITY, DUPLICATED, AND/OR USED, EXCEPT AS EXPRESSLY APPROVED IN WRITING IN ADVANCE BY OWNER. THIS DOCUMENT SHALL BE RETURNED TO OWNER UPON REQUEST. IT MAY BE SUBJECT TO CERTAIN RESTRICTIONS UNDER APPLICABLE EXPORT CONTROL LAWS AND REGULATIONS.

Data Sheet

Date: 6/19/2017
Customer:
Attention:
Submitted by: FAREEDA DUDEKULA

marathon® electric

365TTGS16577

Submittal

Data @ 460 V

Motor Load Data

Load	0%	25%	50%	75%	100%	115%	125%	LR	
Current (Amps)	25.0	28.5	37.5	49.0	61.5	70.0	76.0	362	
Torque (ft-lb)	0.00	55.0	110	166	222	256	280	445	
RPM	1200	1195	1192	1188	1182	1,178	1175	0	
Efficiency (%)		91.0	94.1	94.5	94.5	94.1	93.6		
P.F. (%)	4.0	45.0	66.0	76.0	80.5	81.5	82.0	34.0	

Motor Speed Data

	LR	Pull-Up	BD	Rated	Idle
Speed (RPM)	0	600	1125	1182	1200
Current (Amps)	362	325	225	61.5	25.0
Torque (ft-lb)	445	425	625	222	0.00

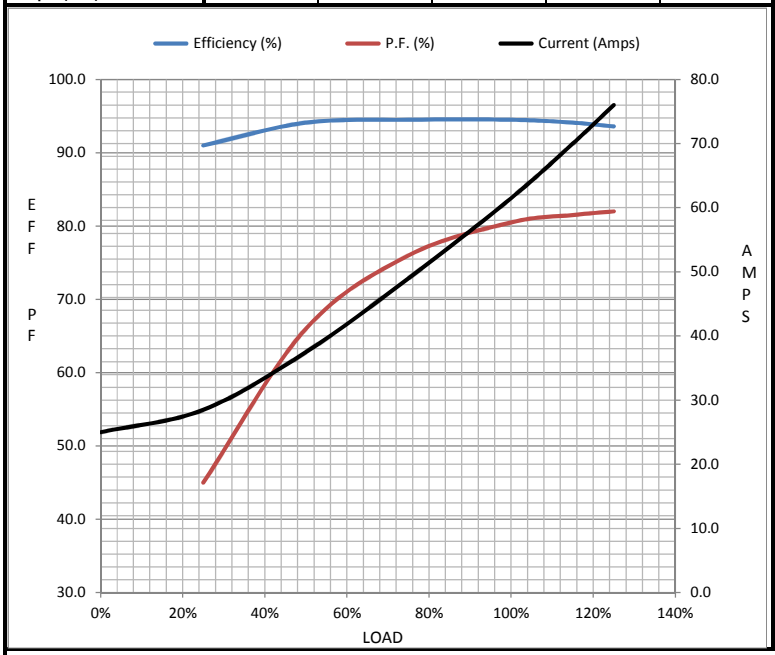

Information Block

HP	50.0
Sync. RPM	1200
Frame	365
Enclosure	TEFC
Construction	TFS
Voltage	230/460 V
Frequency	60 Hz
Design	B
LR Code letter	G
Service Factor	1.15
Temp Rise @ FL	70 ° C
Duty	CONT
Ambient	40 ° C
Elevation	1,000 feet
Rotor/Shaft wk²	17.2 Lb-Ft²
Ref Wdg	T367601 NONE
Sound Pressure @ 1M	58 dBA
VFD Rating	CONSTANT 2:1
Outline Dwg	B-SS518459-1450
Conn. Diag	A-EE7308T
Additional Specifications:	
0	
0	

EQUIV CKT (OHMS / PHASE)

R1	R2	X1	X2	Xm
0.0790	0.0710	0.4140	0.6750	9.9910

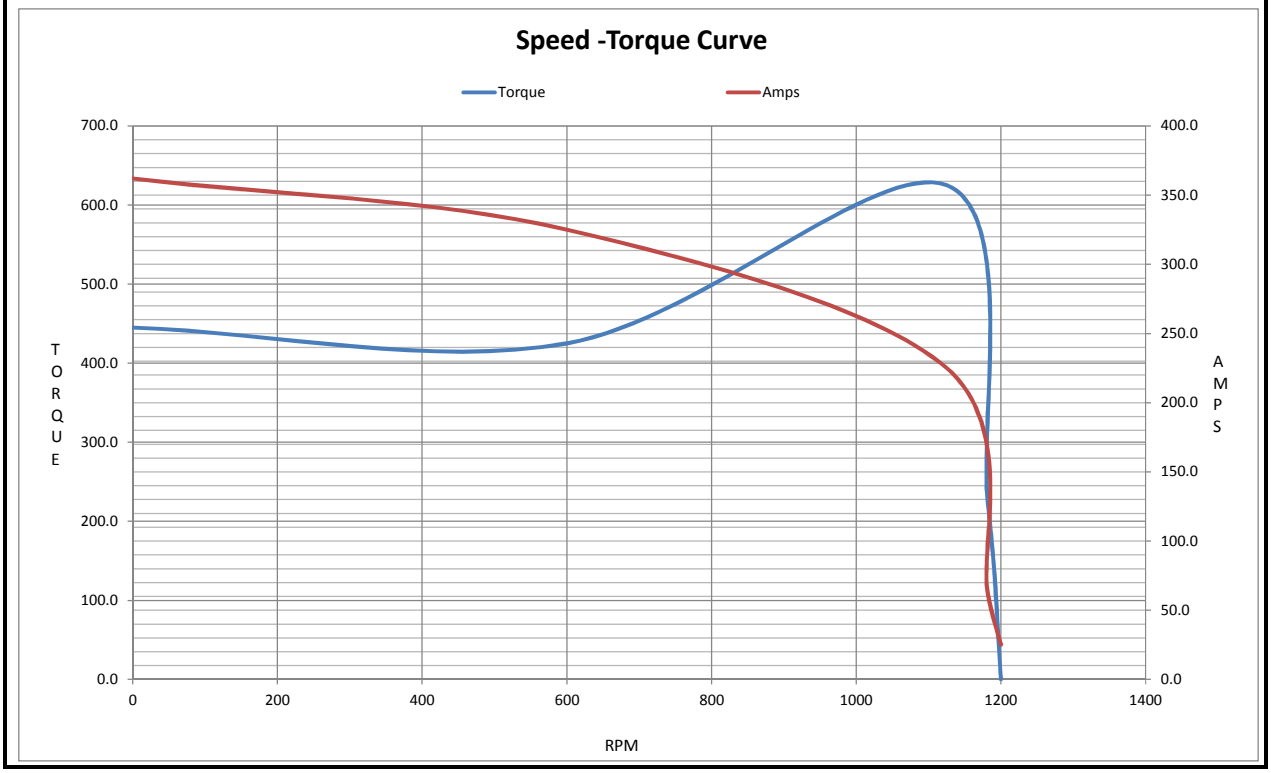

Uncontrolled Copy

CERTIFICATION DATA SHEET

Model#:	365TTGS16577 AN	**WINDING#:**	T367601 NONE 1
CONN. DIAGRAM:	A-EE7308T	**ASSEMBLY:**	F1 ONLY
OUTLINE:	B-SS518459-1450		

TYPICAL MOTOR PERFORMANCE DATA

HP	KW	SYNC. RPM	F.L. RPM	FRAME	ENCLOSURE	KVA CODE	DESIGN
50	37	1200	1182	365T	EPFC	G	B

PH	Hz	VOLTS	FL AMPS	START TYPE	DUTY	INSL	S.F	AMB°C	ELEVATION
3	60	230/460	123/61.5	LINE OR INVERTER	CONTINUOUS	F1	1.15	40	3300

FULL LOAD EFF: 94.5	3/4 LOAD EFF: 94.5	1/2 LOAD EFF: 94.1	GTD. EFF	ELEC. TYPE	NO LOAD AMPS
FULL LOAD PF: 80.5	3/4 LOAD PF: 76	1/2 LOAD PF: 66	93.6	SQ CAGE INV RATED	50 / 25

F.L. TORQUE	LOCKED ROTOR AMPS	L.R. TORQUE	B.D. TORQUE	F.L. RISE°C
222 LB-FT	724 / 362	445 LB-FT 200	625 LB-FT 282	70

SOUND PRESSURE @ 3 FT.	SOUND POWER	ROTOR WK^2	MAX. WK^2	SAFE STALL TIME	STARTS /HOUR	APPROX. MOTOR WGT
58 dBA	68 dBA	17.2 LB-FT^2	- LB-FT^2	25 SEC.	-	1025 LBS.

*** SUPPLEMENTAL INFORMATION ***

DE BRACKET TYPE	ODE BRACKET TYPE	MOUNT TYPE	ORIENTATION	SEVERE DUTY	HAZARDOUS LOCATION	DRIP COVER	SCREENS	PAINT
STANDARD	STANDARD	RIGID	HORIZONTAL	PREMIUM SEVERE DUTY	EXP PROOF CL I GR C&D CL II GR F&G T3B	FALSE	NONE	BLUE (EPOXY)

BEARINGS		GREASE	SHAFT TYPE	SPECIAL DE	SPECIAL ODE	SHAFT MATERIAL	FRAME MATERIAL
DE	OPE						
BALL 6314	BALL 6312	POLYREX EM	T	NONE	NONE	1045 HOT ROLLED (C-204)	CAST IRON

THERMO-PROTECTORS				THERMISTORS	CONTROL	SPACE /n HEATERS
THERMOSTATS	PROTECTORS	WDG RTDs	BRG RTDs			
TSTATS (N/C)	NOT	NONE	NONE	NONE	FALSE	NONE VOLTS

If Inverter equals NONE, contact factory for further information

INVERTER TORQUE: CONSTANT 2:1
INV. HP SPEED RANGE: 1.5 X BASE SPEED

ENCODER: NONE
NONE NONE
NONE NONE PPR

BRAKE: NONE NONE
NONE P/N NONE
NONE NONE
- FT-LB NONE V NONE Hz

* NOTES *

DATE: 06/22/2017 03:34:48 AM
FORM 3531 REV.3 02/07/99
** Subject to change without notice.