Fire Pump Motors

Model No: 365TSTFS14009
Catalog No: Y1625

Fire Pump Motor, 75 & 60 HP, 3 Ph, 60 & 50 Hz, 230/460 & 190/380 V, 3600 RPM, 365TS Frame, TEFC

©2026 Marathon, All Rights Reserved.

marathon®

Product Information Packet: Model No: 365TSTFS14009, Catalog No: Y1625 Fire Pump Motor, 75 & 60 HP, 3 Ph, 60 & 50 Hz, 230/460 & 190/380 V, 3600 RPM, 365TS Frame, TEFC

Nameplate Specifications

Phase	**3**	Output HP	**75 & 60 Hp**
Output KW	**56.0 & 45.0 kW**	Voltage	**230/460 & 190/380 V**
Speed	**3558 & 2960 r/min**	Synchronous RPM	**3600 & 3000 r/min**
Service Factor	**1.15 & 1.15**	Frame	**365TS**
Enclosure	**Totally Enclosed Fan Cooled**	Thermal Protection	**No Protection**
Efficiency	**93 & 93 %**	Ambient Temperature	**40 °C**
Frequency	**60 & 50 Hz**	Current	**172/86 & 166/83 A**
Power Factor	**87.5**	Duty	**Continuous**
Insulation Class	**F**	Design Code	**B**
KVA Code	**G**	Drive End Bearing Size	**6312**
Opp Drive End Bearing Size	**6312**	UL	**Listed**
CSA	**Y**	CE	**Y**
IP Code	**43**	Number of Speeds	**1**

Technical Specifications

Electrical Type	**Squirrel Cage Induction Run**	Starting Method	**Part Wdg Start Low Volt Only & Wye Start Delta Run**
Poles	**2**	Rotation	**Reversible**
Resistance Main	**.072 O**	Mounting	**Rigid Base**
Motor Orientation	**Horizontal**	Drive End Bearing	**Ball**
Opp Drive End Bearing	**Ball**	Frame Material	**Cast Iron**
Shaft Type	**TS**	Overall Length	**30.38 in**
Frame Length	**14.5 in**	Shaft Diameter	**1 7/8 in**
Shaft Extension	**3.99 in**	Assembly/Box Mounting	**F1/F2 Capable**

Drawings

Connection Drawing	**EE7308AA**	Outline Drawing	**B-SS504620-1450**

This is an uncontrolled document once printed or downloaded and is subject to change without notice. Date Created: 16/10/2026

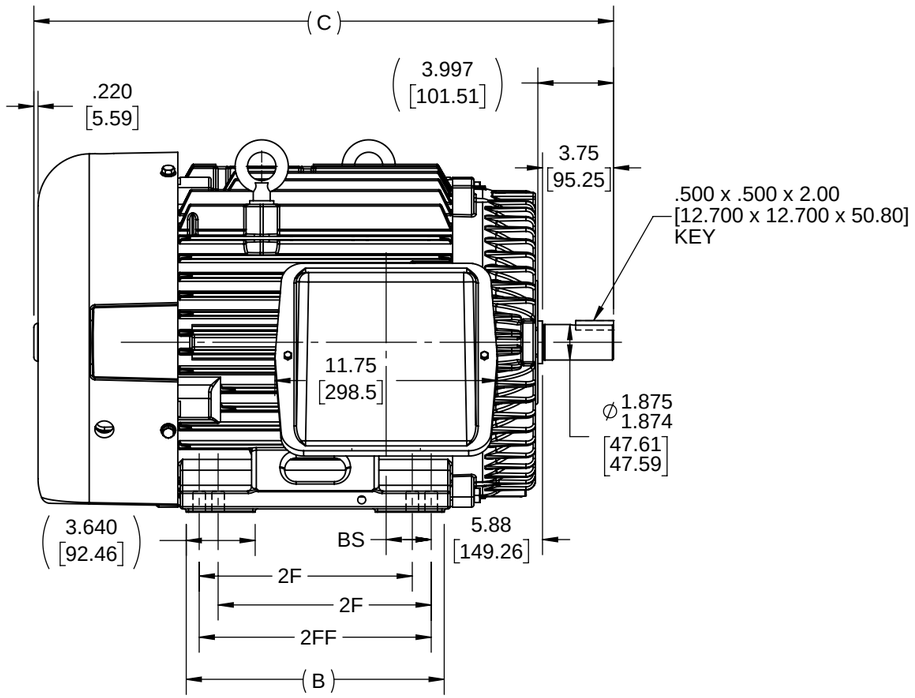

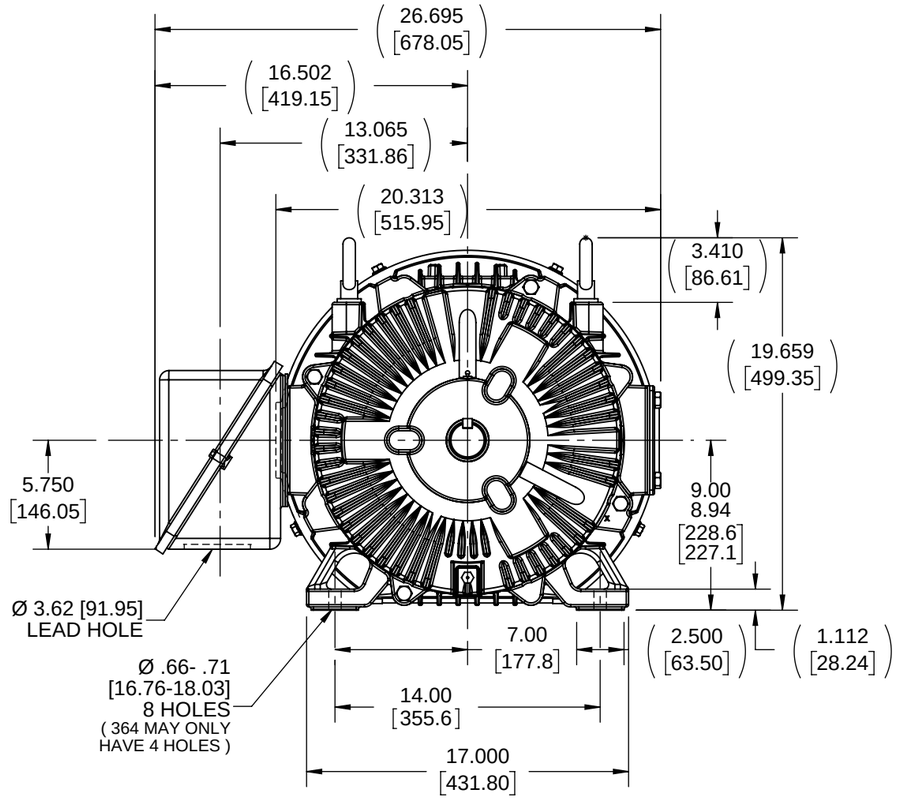

F2 VIEW

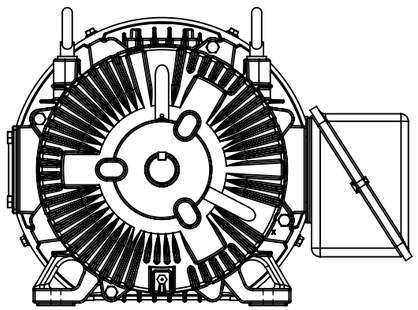

FRAME 364 - 1350

NOTE:
1. ALTERNATE FRAME DRAWING.
2. MODELS USING ALTERNATE FRAME 553485A.

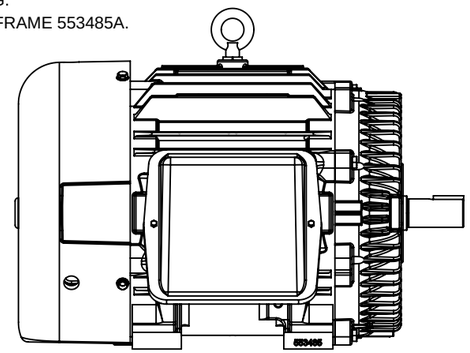

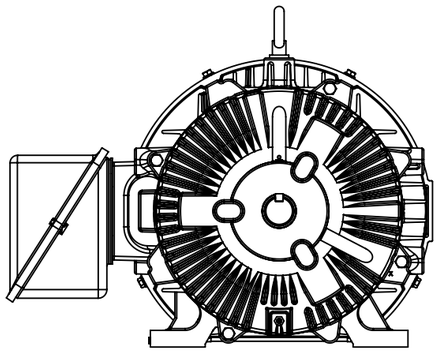

NOTES:
1. CONDUIT BOX CAN BE ROTATED IN 90° STEPS.
2. DIMENSION IN [ ] DESIGNATE MILLIMETERS.

DASH	FRAME	B	C	2F	2FF	BS
1350	364TS	13.25 [336.55]	29.60 [751.94]	11.25 [285.75]	- - -	5.62 [142.75]
1450	364/365TS	14.25 [361.95]	30.60 [777.34]	11.25 [285.75]	12.25 [311.15]	2.38 [60.45]

DRAWING REVISION	REVISION BY	REV DATE/© DATE
E	BISWA	20/05/2026
REQUEST NUMBER	APPROVED BY	DATE
CR-0026330	RMS	20/05/2026

REQUEST NUMBER DESCRIPTION
DRAWING TITLE BLOCK UPDATED

COPYRIGHT (PER REVISION DATE) MARATHON ELECTRIC, LLC. ALL RIGHTS RESERVED. PROPRIETARY AND CONFIDENTIAL INFORMATION - THIS DOCUMENT IS THE PROPERTY OF MARATHON ELECTRIC, LLC. ("OWNER") AND CONTAINS OWNER'S PROPRIETARY INFORMATION. ANY PERSON, CORPORATION OR OTHER FIRM RECEIVING IT IS DEEMED, BY RECEIVING IT, TO AGREE THAT IT, AND/OR ANY PART OF IT, SHALL NOT BE DISCLOSED TO ANY PERSON, CORPORATION OR OTHER ENTITY, DUPLICATED, AND/OR USED, EXCEPT AS EXPRESSLY APPROVED IN WRITING IN ADVANCE BY OWNER. THIS DOCUMENT SHALL BE RETURNED TO OWNER UPON REQUEST. IT MAY BE SUBJECT TO CERTAIN RESTRICTIONS UNDER APPLICABLE EXPORT CONTROL LAWS AND REGULATIONS.

TOLERANCES (EXCEPT AS NOTED):

DEC.	INCH	mm	ANGLE
.X	±0.1	[±3]	±0.5°
.XX	±0.01	[±0.3]	
.XXX	±0.005	[±0.13]	
.XXXX	±0.0005	[±0.013]	

REMOVE BURRS & BREAK SHARP EDGES: .003/.015 [.08/.38] X 45°
CORNER FILLETS: R.02 [.5]
MACHINED SURFACES: 125 INCH / 3.2 mm
mm DIMENSIONS IN [BRACKETS] ARE FOR REFERENCE ONLY

DRAWN BY	
TLB	
DATE	
04-29-1988	
APPROVED BY	
ML	
DATE	
04-29-1988	
REFERENCE	
THIRD ANGLE PROJECTION	

marathon™

DESCRIPTION
OUTLINE
360TS FR.- TEFC- (STD.)

MATERIAL | PROCESS/FINISH

SIZE B | DRAWING NUMBER SS504620 | SHEET 1 OF 1

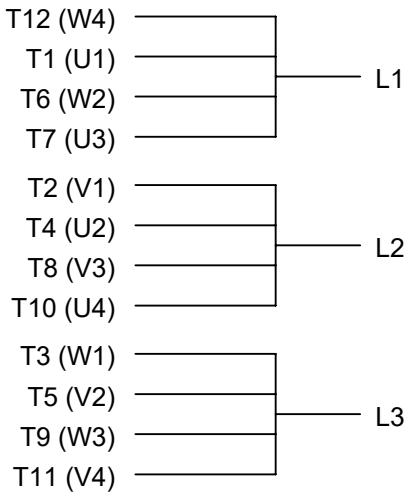

LOW VOLTAGE

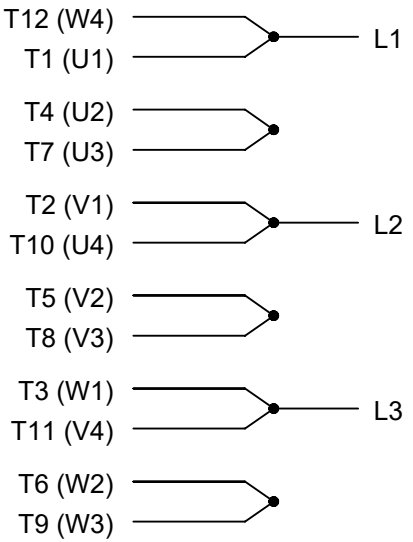

HIGH VOLTAGE

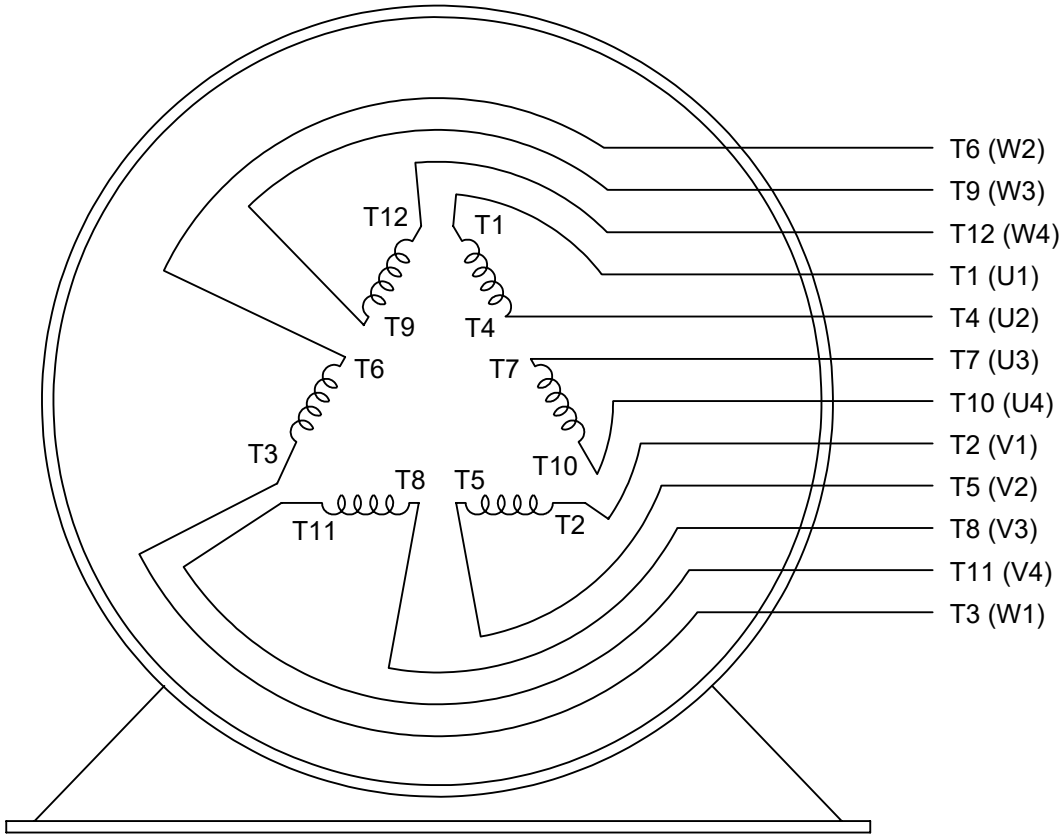

VIEW OF TERMINAL END

DRAWING REVISION: L	REVISION BY: SB	REV DATE/© DATE: 08/01/2025	PRIMARY DIMENSIONS ARE INCH mm DIMENSIONS IN [BRACKETS] ARE FOR REFERENCE ONLY	DRAWN BY: LZ	marathon™
REQUEST NUMBER: CR-0023654	APPROVED BY: SBD	DATE: 08/01/2025		DATE: 01-12-1994	
REQUEST NUMBER DESCRIPTION: DRAWING TITLE BLOCK UPDATED				APPROVED BY: GK	DESCRIPTION: CONN DIAGRAM-EXTERNAL 3Ø-2/1 DELTA-12 LEADS
				DATE: 01-14-1994	
				REFERENCE	MATERIAL / PROCESS/FINISH
				THIRD ANGLE PROJECTION	SIZE: A / DRAWING NUMBER: EE7308AA / SHEET: 1 OF 1

COPYRIGHT (PER REVISION DATE) MARATHON ELECTRIC, LLC. ALL RIGHTS RESERVED. PROPRIETARY AND CONFIDENTIAL INFORMATION - THIS DOCUMENT IS THE PROPERTY OF MARATHON ELECTRIC, LLC. ("OWNER") AND CONTAINS OWNER'S PROPRIETARY INFORMATION. ANY PERSON, CORPORATION OR OTHER FIRM RECEIVING IT IS DEEMED, BY RECEIVING IT, TO AGREE THAT IT, AND/OR ANY PART OF IT, SHALL NOT BE DISCLOSED TO ANY PERSON, CORPORATION OR OTHER ENTITY, DUPLICATED, AND/OR USED, EXCEPT AS EXPRESSLY APPROVED IN WRITING IN ADVANCE BY OWNER. THIS DOCUMENT SHALL BE RETURNED TO OWNER UPON REQUEST. IT MAY BE SUBJECT TO CERTAIN RESTRICTIONS UNDER APPLICABLE EXPORT CONTROL LAWS AND REGULATIONS.

Data Sheet

Date: 6/29/2017
Customer:
Attention:
Submitted by: FAREEDA DUDEKULA

marathon® electric

365TSTFS14009

Submittal

Data @ 460 V

Motor Load Data

Load	0%	25%	50%	75%	100%	115%	125%	LR	
Current (Amps)	24.0	32.0	48.0	66.0	86.0	98.0	108	535	
Torque (ft-lb)	0.00	28.0	55.0	83.0	111	128	139	200	
RPM	3600	3590	3580	3570	3558	3,550	3545	0	
Efficiency (%)		87.5	92.4	93.0	93.0	93.0	92.4		
P.F. (%)	9.0	62.0	80.0	86.0	87.5	88.0	88.0	32.0	

Motor Speed Data

	LR	Pull-Up	BD	Rated	Idle
Speed (RPM)	0	1800	3375	3558	3600
Current (Amps)	535	475	310	86.0	24.0
Torque (ft-lb)	200	175	270	111	0.00

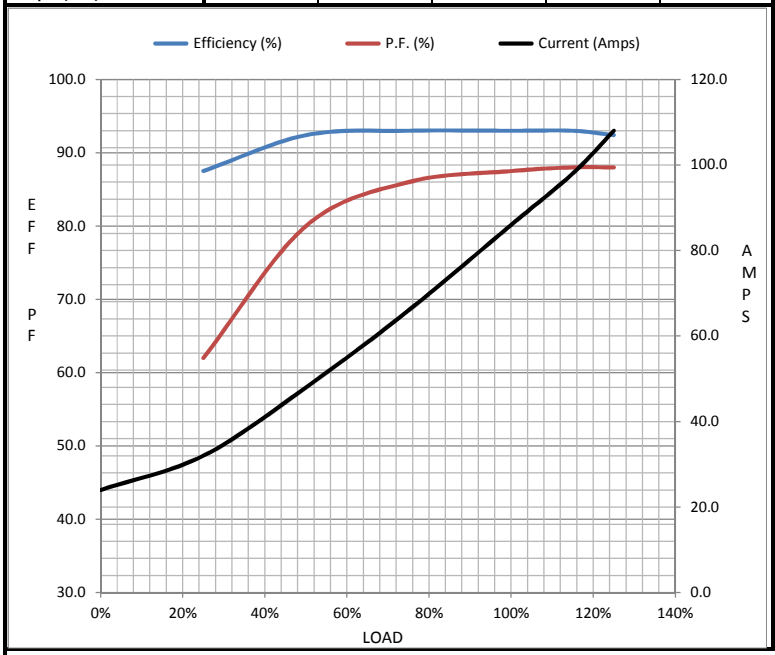

Information Block

HP	75.0
Sync. RPM	3600
Frame	365
Enclosure	TEFC
Construction	TFS
Voltage	230/460#190/380 V
Frequency	60 Hz
Design	A
LR Code letter	G
Service Factor	1.15
Temp Rise @ FL	75 ° C
Duty	CONT
Ambient	40 ° C
Elevation	1,000 feet
Rotor/Shaft wk²	8.2 Lb-Ft²
Ref Wdg	T365273 NONE
Sound Pressure @ 1M	78 dBA
VFD Rating	NONE
Outline Dwg	B-SS504620-1450
Conn. Diag	A-EE7308AA
Additional Specifications:	
0	
0	

EQUIV CKT (OHMS / PHASE)

R1	R2	X1	X2	Xm
0.0530	0.0380	0.3060	0.3550	10.9620

Speed -Torque Curve

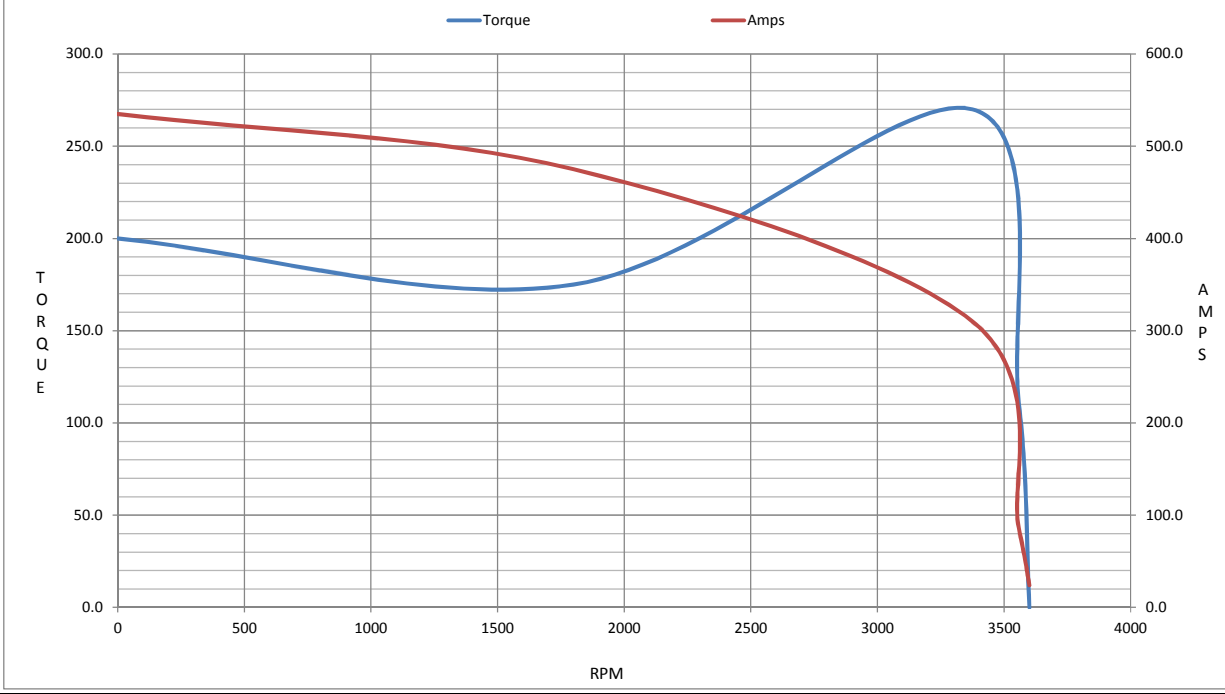

Uncontrolled Copy

CERTIFICATION DATA SHEET

Model#:	365TSTFS14009 AN	**WINDING#:**	T365273 NONE 2
CONN. DIAGRAM:	A-EE7308AA	**ASSEMBLY:**	F1/F2 CAPABLE
OUTLINE:	B-SS504620-1450		

TYPICAL MOTOR PERFORMANCE DATA

HP	KW	SYNC. RPM	F.L. RPM	FRAME	ENCLOSURE	KVA CODE	DESIGN
75&60	56&45	3600	3558&2960	365TS	TEFC	G	B

PH	Hz	VOLTS	FL AMPS	START TYPE	DUTY	INSL	S.F	AMB°C	ELEVATION
3	60/50	230/460#190/380	172/86&166/83	PWS(LV ONLY) & YDRUN	CONTINUOUS	F1	1.15/1.15	40	3300

FULL LOAD EFF: 93&93	3/4 LOAD EFF: 93	1/2 LOAD EFF: 92.4	GTD. EFF	ELEC. TYPE	NO LOAD AMPS
FULL LOAD PF: 87.5&88	3/4 LOAD PF: 86	1/2 LOAD PF: 80	91.7	SQ CAGE IND RUN	48 / 24

F.L. TORQUE	LOCKED ROTOR AMPS	L.R. TORQUE	B.D. TORQUE	F.L. RISE°C
111 LB-FT	1070 / 535	200 LB-FT 180	270 LB-FT 242	75

SOUND PRESSURE @ 3 FT.	SOUND POWER	ROTOR WK^2	MAX. WK^2	SAFE STALL TIME	STARTS /HOUR	APPROX. MOTOR WGT
78 dBA	88 dBA	8.2 LB-FT^2	55 LB-FT^2	15 SEC.	2	925 LBS.

*** SUPPLEMENTAL INFORMATION ***

DE BRACKET TYPE	ODE BRACKET TYPE	MOUNT TYPE	ORIENTATION	SEVERE DUTY	HAZARDOUS LOCATION	DRIP COVER	SCREENS	PAINT
STANDARD	STANDARD	RIGID	HORIZONTAL	FALSE	NONE	FALSE	NONE	RED (ENAMEL)

BEARINGS		GREASE	SHAFT TYPE	SPECIAL DE	SPECIAL ODE	SHAFT MATERIAL	FRAME MATERIAL
DE	OPE						
BALL 6312	BALL 6312	POLYREX EM	TS	NONE	NONE	1045 HOT ROLLED (C-204)	CAST IRON

THERMO-PROTECTORS				THERMISTORS	CONTROL	SPACE /n HEATERS
THERMOSTATS	PROTECTORS	WDG RTDs	BRG RTDs			
NONE	NOT	NONE	NONE	NONE	FALSE	NONE VOLTS

If Inverter equals NONE, contact factory for further information

INVERTER TORQUE: NONE
INV. HP SPEED RANGE: NONE

ENCODER: NONE
NONE NONE
NONE NONE PPR

BRAKE: NONE NONE
NONE P/N NONE
NONE NONE
- FT-LB NONE V NONE Hz

*
N
O
T
E
S
*

DATE: 06/22/2017 12:15:25 AM
FORM 3531 REV.3 02/07/99
** Subject to change without notice.