marathon®

Fire Pump Motors

Model No: 365TSTDCD4008
Catalog No: U1118

Fire Pump Motor, 100 HP, 3 Ph, 60 Hz, 575 V, 3600 RPM, 365TS Frame, DP

©2026 Marathon, All Rights Reserved.

marathon®

Product Information Packet: Model No: 365TSTDCD4008, Catalog No: U1118 Fire Pump Motor, 100 HP, 3 Ph, 60 Hz, 575 V, 3600 RPM, 365TS Frame, DP

Nameplate Specifications

Phase	**3**	Output HP	**100 Hp**
Output KW	**75.0 kW**	Voltage	**575 V**
Speed	**3568 r/min**	Synchronous RPM	**3600 r/min**
Service Factor	**1.15**	Frame	**365TS**
Enclosure	**Drip Proof**	Thermal Protection	**No Protection**
Efficiency	**93 %**	Ambient Temperature	**50 °C**
Frequency	**60 Hz**	Current	**91.0 A**
Power Factor	**88**	Duty	**Continuous**
Insulation Class	**F**	Design Code	**B**
KVA Code	**F**	Drive End Bearing Size	**6312**
Opp Drive End Bearing Size	**6312**	UL	**Listed**
CSA	**Y**	CE	**Y**
IP Code	**23**	Number of Speeds	**1**

Technical Specifications

Electrical Type	**Squirrel Cage Induction Run**	Starting Method	**Part Wdg Start & Wye Start Delta Run**
Poles	**2**	Rotation	**Reversible**
Resistance Main	**.095 O**	Mounting	**Rigid Base**
Motor Orientation	**Horizontal**	Drive End Bearing	**Ball**
Opp Drive End Bearing	**Ball**	Frame Material	**Cast Iron**
Shaft Type	**TS**	Overall Length	**31.14 in**
Frame Length	**18.89 in**	Shaft Diameter	**1 7/8 in**
Shaft Extension	**3.75 in**	Assembly/Box Mounting	**F1/F2 Capable**

Drawings

Connection Drawing	**EE7300BH**	Outline Drawing	**SS620748-365TS**

This is an uncontrolled document once printed or downloaded and is subject to change without notice. Date Created: 16/10/2026

DASH NO.	B	C	D	E	2E	2F	2FF	BA	BS	MOUNTING	FRAME
100	16.93	29.44	9.00	7.00	14.00	11.25	12.25	5.88	12.52	F1 OR F2	364TS
200		31.01							14.09		365TS

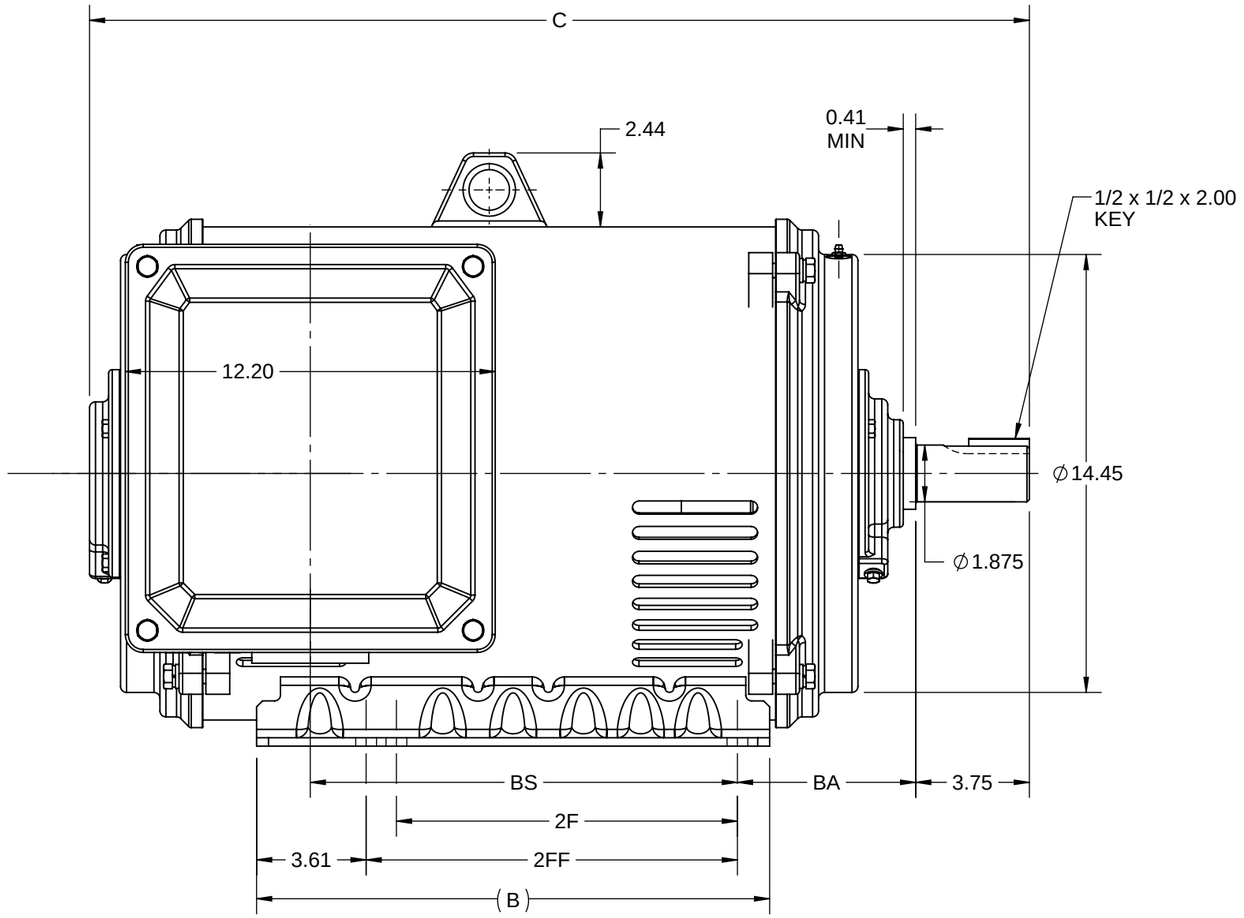

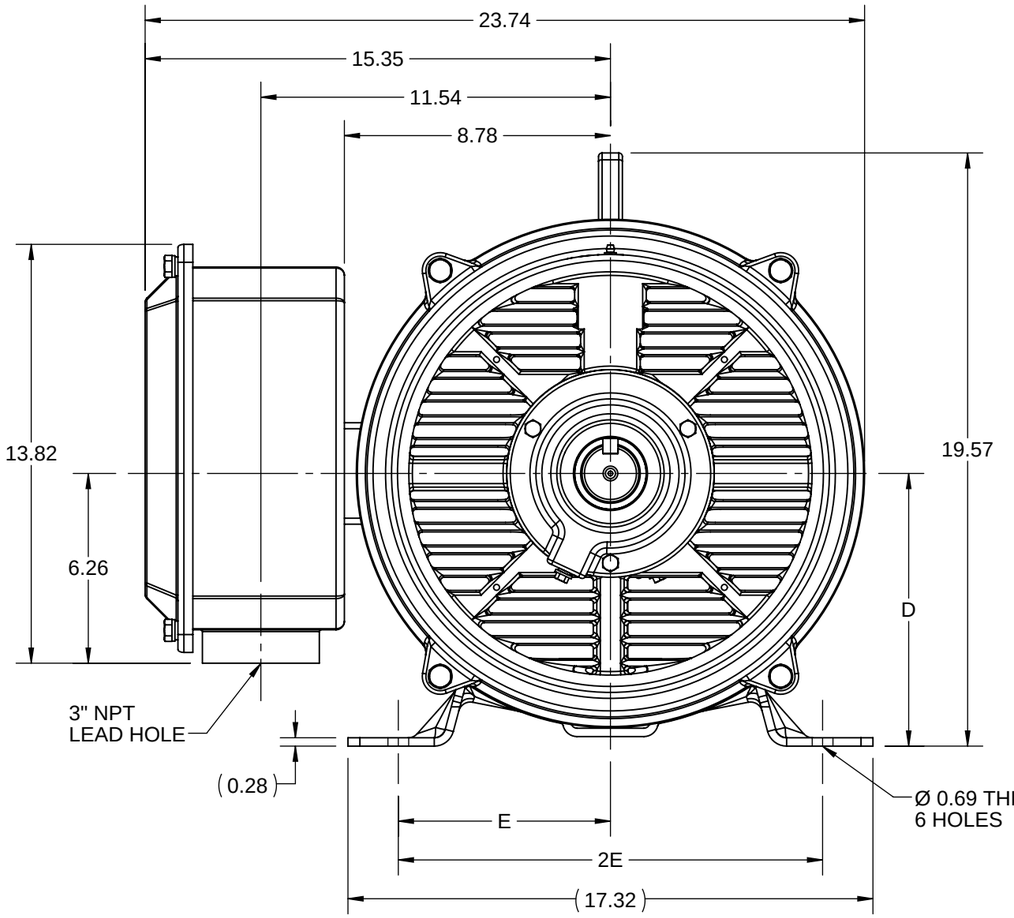

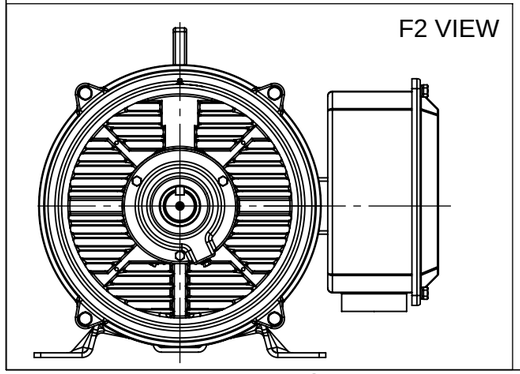

DRAWING REVISION	REVISION BY	REV DATE/© DATE
D	SV	05/22/2026
REQUEST NUMBER	APPROVED BY	DATE
CR-0026372	RMS	05/22/2026

REQUEST NUMBER DESCRIPTION
DRAWING TITLE BLOCK UPDATED

COPYRIGHT (PER REVISION DATE) MARATHON ELECTRIC, LLC. ALL RIGHTS RESERVED. PROPRIETARY AND CONFIDENTIAL INFORMATION - THIS DOCUMENT IS THE PROPERTY OF MARATHON ELECTRIC, LLC. ("OWNER") AND CONTAINS OWNER'S PROPRIETARY INFORMATION. ANY PERSON, CORPORATION OR OTHER FIRM RECEIVING IT IS DEEMED, BY RECEIVING IT, TO AGREE THAT IT, AND/OR ANY PART OF IT, SHALL NOT BE DISCLOSED TO ANY PERSON, CORPORATION OR OTHER ENTITY, DUPLICATED, AND/OR USED, EXCEPT AS EXPRESSLY APPROVED IN WRITING IN ADVANCE BY OWNER. THIS DOCUMENT SHALL BE RETURNED TO OWNER UPON REQUEST. IT MAY BE SUBJECT TO CERTAIN RESTRICTIONS UNDER APPLICABLE EXPORT CONTROL LAWS AND REGULATIONS.

PRIMARY DIMENSIONS ARE INCH
mm DIMENSIONS IN [BRACKETS]
ARE FOR REFERENCE ONLY

DRAWN BY	marathon™
ZHU XIAOWEI	
DATE	
27/04/2021	
APPROVED BY	DESCRIPTION
DATE	OUTLINE
	364/365TS FR NEMA ODP RS
REFERENCE	MATERIAL / PROCESS/FINISH
THIRD ANGLE PROJECTION	SIZE B / DRAWING NUMBER SS620748 / SHEET 1 OF 1

Uncontrolled Copy

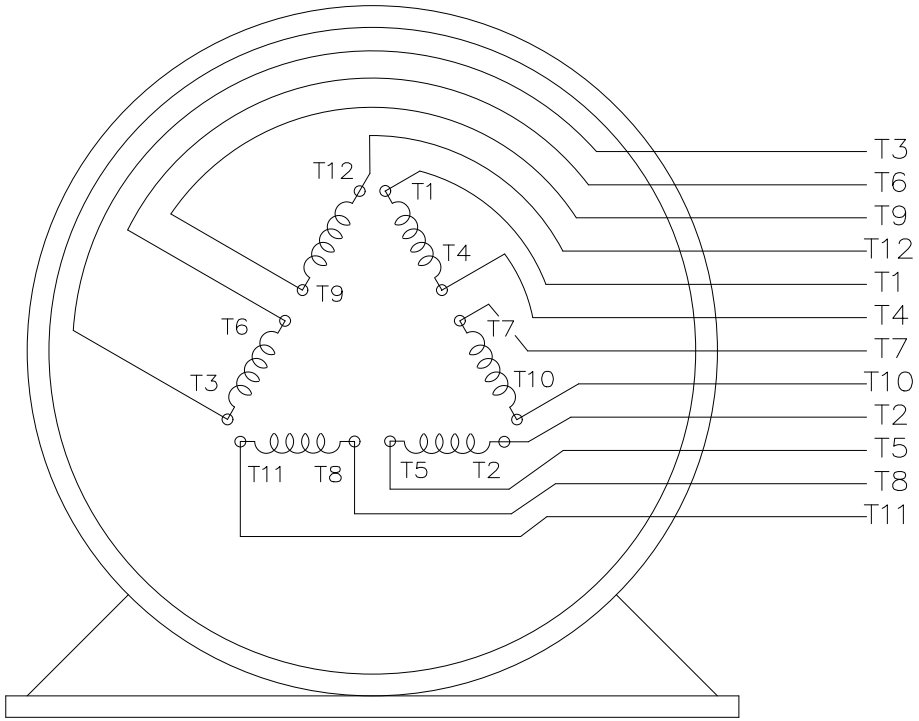

VIEW OF TERMINAL END

T12(W4)
T1(U1)
T6(W2)
T7(U3)
LINE 1

T2(V1)
T4(U2)
T8(V3)
T10(U4)
LINE 2

T3(W1)
T5(V2)
T9(W3)
T11(V4)
LINE 3

DRAWING REVISION: E	REVISION BY: SB	REV DATE/ © DATE: 08/04/2025
REQUEST NUMBER: CR-0023654	APPROVED BY: SBD	DATE: 08/04/2025
REQUEST NUMBER DESCRIPTION: DRAWING TITLE BLOCK UPDATED		

COPYRIGHT (PER REVISION DATE) MARATHON ELECTRIC, LLC. ALL RIGHTS RESERVED.
PROPRIETARY AND CONFIDENTIAL INFORMATION - THIS DOCUMENT IS THE PROPERTY OF MARATHON ELECTRIC, LLC. ("OWNER") AND CONTAINS OWNER'S PROPRIETARY INFORMATION. ANY PERSON, CORPORATION OR OTHER FIRM RECEIVING IT IS DEEMED, BY RECEIVING IT, TO AGREE THAT IT, AND/OR ANY PART OF IT, SHALL NOT BE DISCLOSED TO ANY PERSON, CORPORATION OR OTHER ENTITY, DUPLICATED, AND/OR USED, EXCEPT AS EXPRESSLY APPROVED IN WRITING IN ADVANCE BY OWNER. THIS DOCUMENT SHALL BE RETURNED TO OWNER UPON REQUEST. IT MAY BE SUBJECT TO CERTAIN RESTRICTIONS UNDER APPLICABLE EXPORT CONTROL LAWS AND REGULATIONS.

PRIMARY DIMENSIONS ARE INCH
mm DIMENSIONS IN [BRACKETS]
ARE FOR REFERENCE ONLY

DRAWN BY: RJW	marathon™	
DATE: 02/11/2005		
APPROVED BY: GK	DESCRIPTION: CONNECTION DIAGRAM 12 LEAD - SINGLE VOLTAGE	
DATE: 02/11/2005		
REFERENCE	MATERIAL	PROCESS/FINISH
THIRD ANGLE PROJECTION	SIZE: A / DRAWING NUMBER: EE7300BH	SHEET: 1 OF 1

Uncontrolled Copy

Data Sheet

Date: 12/12/2018
Customer:
Attention:
Submitted by: FAREEDA DUDEKULA

marathon® electric

365TSTDCD4008

Submittal

Data @ 575 V

Motor Load Data

Load	0%	25%	50%	75%	100%	115%	125%	LR	
Current (Amps)	24.8	32.8	49.6	69.6	91.2	106	114	540	
Torque (ft-lb)	0.00	36.5	73.5	110	147	170	185	235	
RPM	3600	3590	3585	3575	3568	3,562	3558	0	
Efficiency (%)		90.2	92.4	93.0	93.0	92.4	91.7		
P.F. (%)	6.5	62.0	80.0	86.0	88.0	88.5	88.5	36.0	

Motor Speed Data

	LR	Pull-Up	BD	Rated	Idle
Speed (RPM)	0	1800	3450	3568	3600
Current (Amps)	540	480	328	91.2	24.8
Torque (ft-lb)	235	175	350	147	0.00

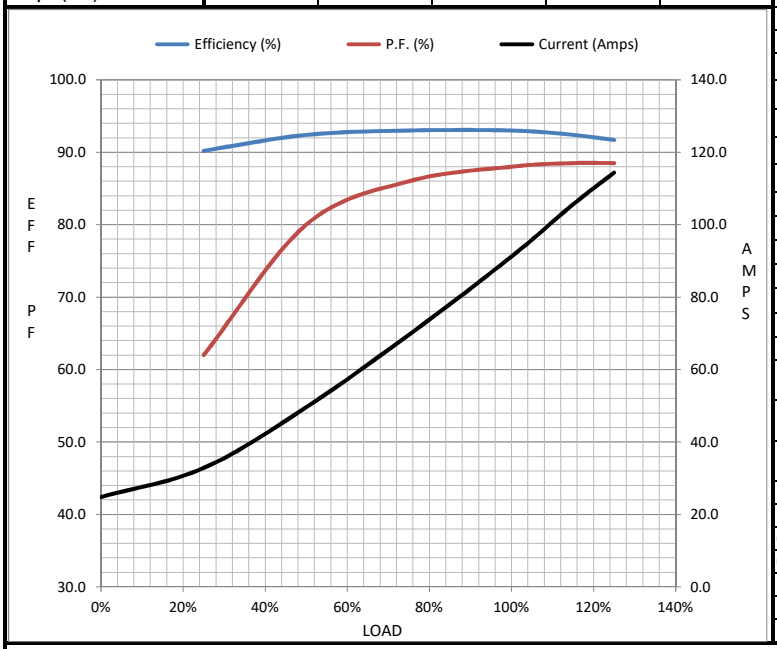

Information Block

HP	100.0	
Sync. RPM	3600	
Frame	365	
Enclosure	DP	
Construction	TDC	
Voltage	575	V
Frequency	60	Hz
Design	B	
LR Code letter	F	
Service Factor	1.15	
Temp Rise @ FL	65	° C
Duty	CONT	
Ambient	40	° C
Elevation	1,000	feet
Rotor/Shaft wk²	0.00	Lb-Ft²
Ref Wdg	IE3L2252111 NONE	
Sound Pressure @ 1M	999	dBA
VFD Rating	NONE	
Outline Dwg	SS620748	
Conn. Diag	EE7300BH	
Additional Specifications:		
0		
0		

EQUIV CKT (OHMS / PHASE)

R1	R2	X1	X2	Xm
0.0890	0.0330	0.3370	0.4660	13.2020

Speed -Torque Curve

