marathon®

Elevator Duty Motors

Model No: 364TTDBD7026
Catalog No: GTE4059

Elevator Duty Motor, 60 & 75 HP, 3 Ph, 60 & 60 Hz, 230/460 & 230/460 V, 1800 RPM, 364T Frame, DP

©2026 Marathon, All Rights Reserved.

marathon®

Product Information Packet: Model No: 364TTDBD7026, Catalog No: GTE4059 Elevator Duty Motor, 60 & 75 HP, 3 Ph, 60 & 60 Hz, 230/460 & 230/460 V, 1800 RPM, 364T Frame, DP

Nameplate Specifications

Phase	**3**	Output HP	**60 & 75 Hp**
Output KW	**45.0 & 56.0 kW**	Voltage	**230/460 & 230/460 V**
Speed	**1785 & 1785 r/min**	Synchronous RPM	**1800 & 1800 r/min**
Service Factor	**1.00 & 1.00**	Frame	**364T**
Enclosure	**Drip Proof**	Thermal Protection	**No Protection**
Efficiency	**95 & 94 %**	Ambient Temperature	**40 °C**
Frequency	**60 & 60 Hz**	Current	**138/69 & 173/86.5 A**
Power Factor	**86.2**	Duty	**120/80 Starts/Hour**
Insulation Class	**F**	Design Code	**B**
KVA Code	**G**	Drive End Bearing Size	**6314**
Opp Drive End Bearing Size	**6313**	UL	**Recognized**
CSA	**Y**	CE	**Y**
IP Code	**22**	Number of Speeds	**1**

Technical Specifications

Electrical Type	**Squirrel Cage Induction Run**	Starting Method	**Wye Start Delta Run**
Poles	**4**	Rotation	**Reversible**
Resistance Main	**.117 O**	Mounting	**Rigid Base**
Motor Orientation	**Horizontal**	Drive End Bearing	**Ball**
Opp Drive End Bearing	**Ball**	Frame Material	**Rolled Steel**
Shaft Type	**T**	Assembly/Box Mounting	**F1/F2 Capable**

Drawings

Connection Drawing	**EE7358**	Outline Drawing	**SS620750-100**

This is an uncontrolled document once printed or downloaded and is subject to change without notice. Date Created: 16/10/2026

DASH NO.	B	C	D	E	2E	2F	2FF	BA	BS	MOUNTING	FRAME
100	16.93	31.57	9.00	7.00	14.00	11.25	12.25	5.88	12.52	F1 OR F2	364T
200		33.14							14.09		365T

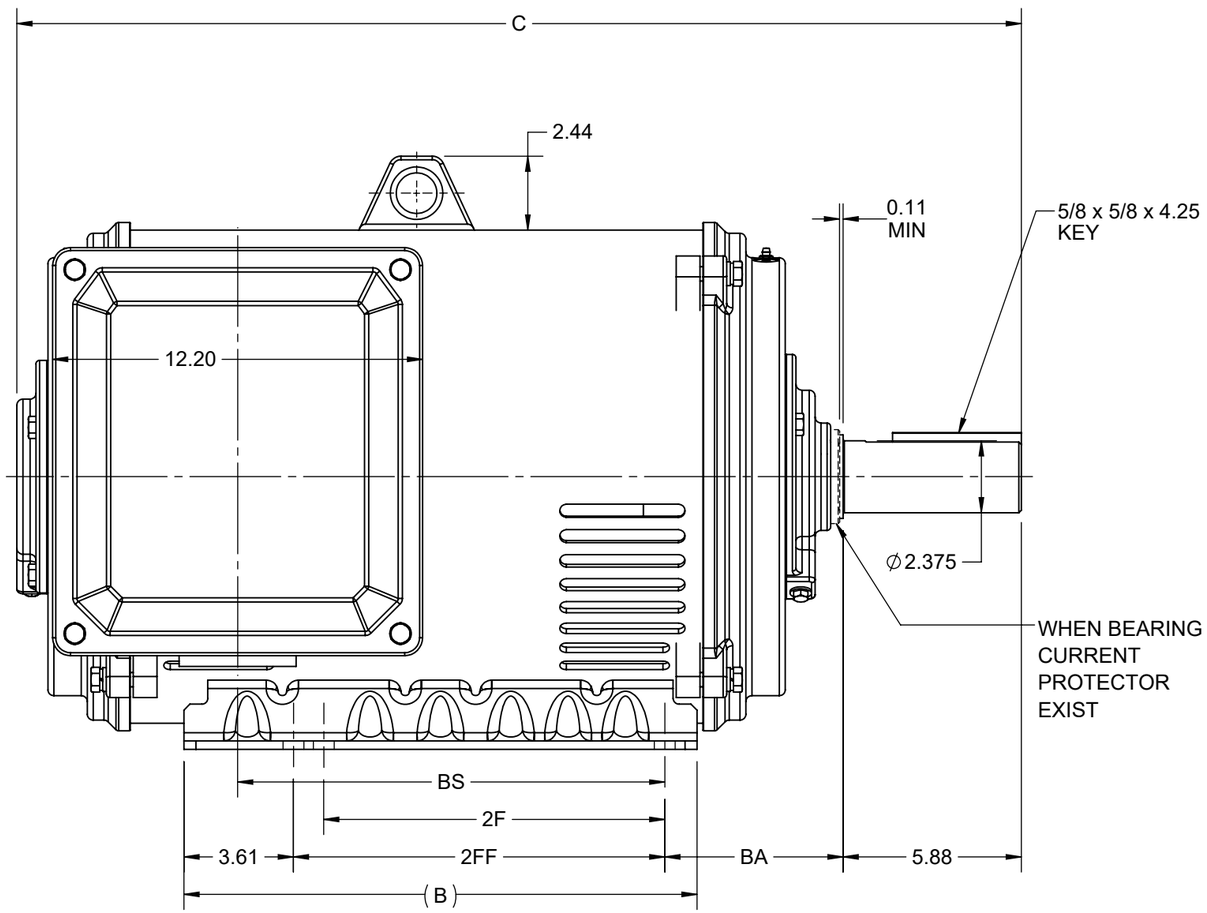

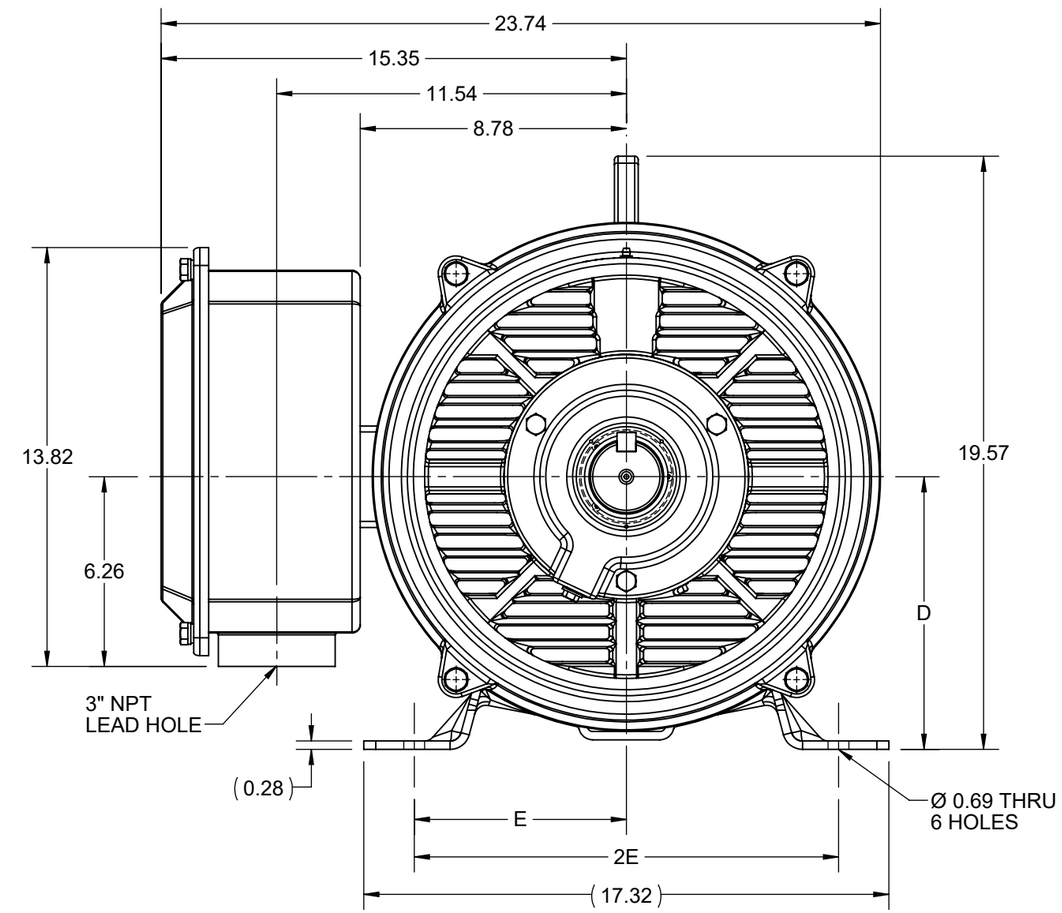

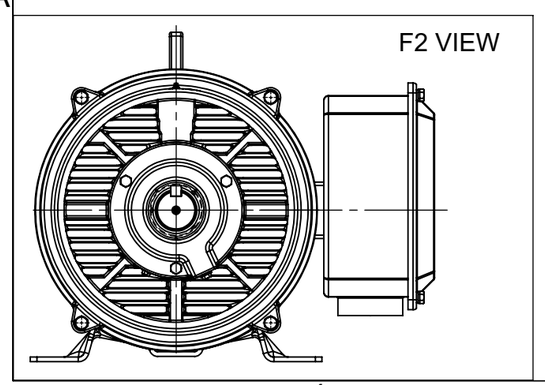

DRAWING REVISION	REVISION BY	REV DATE/© DATE
D	SB	07/23/2025
REQUEST NUMBER	APPROVED BY	DATE
CR-0023556	SBD	07/23/2025

REQUEST NUMBER DESCRIPTION
DRAWING TITLE BLOCK UPDATED

COPYRIGHT (PER REVISION DATE) MARATHON ELECTRIC, LLC. ALL RIGHTS RESERVED. PROPRIETARY AND CONFIDENTIAL INFORMATION - THIS DOCUMENT IS THE PROPERTY OF MARATHON ELECTRIC, LLC. ("OWNER") AND CONTAINS OWNER'S PROPRIETARY INFORMATION. ANY PERSON, CORPORATION OR OTHER FIRM RECEIVING IT IS DEEMED, BY RECEIVING IT, TO AGREE THAT IT, AND/OR ANY PART OF IT, SHALL NOT BE DISCLOSED TO ANY PERSON, CORPORATION OR OTHER ENTITY, DUPLICATED, AND/OR USED, EXCEPT AS EXPRESSLY APPROVED IN WRITING IN ADVANCE BY OWNER. THIS DOCUMENT SHALL BE RETURNED TO OWNER UPON REQUEST. IT MAY BE SUBJECT TO CERTAIN RESTRICTIONS UNDER APPLICABLE EXPORT CONTROL LAWS AND REGULATIONS.

PRIMARY DIMENSIONS ARE INCH
mm DIMENSIONS IN [BRACKETS]
ARE FOR REFERENCE ONLY

DRAWN BY	
DATE	
APPROVED BY	
DATE	
REFERENCE	
THIRD ANGLE PROJECTION	

marathon™

DESCRIPTION
OUTLINE
364/365T FR NEMA ODP RS

MATERIAL	PROCESS/FINISH

SIZE	DRAWING NUMBER	SHEET
B	SS620750	1 OF 1

HIGH VOLTAGE

WYE START

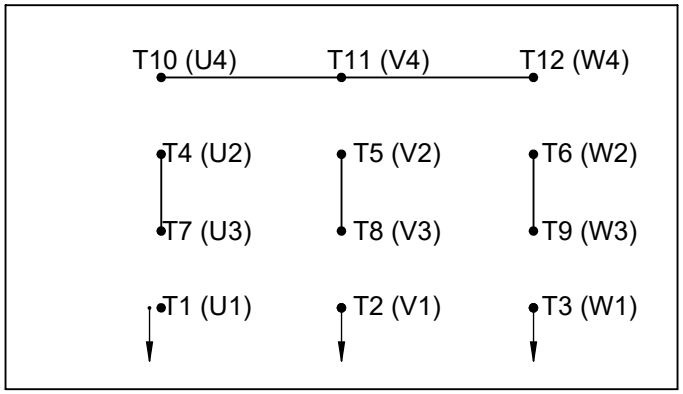

DELTA RUN

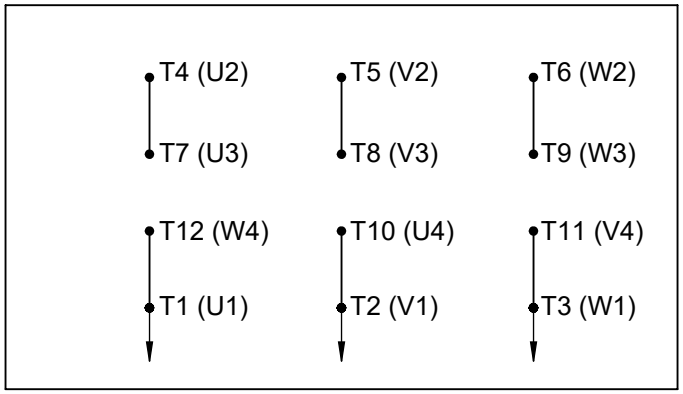

LOW VOLTAGE

WYE START

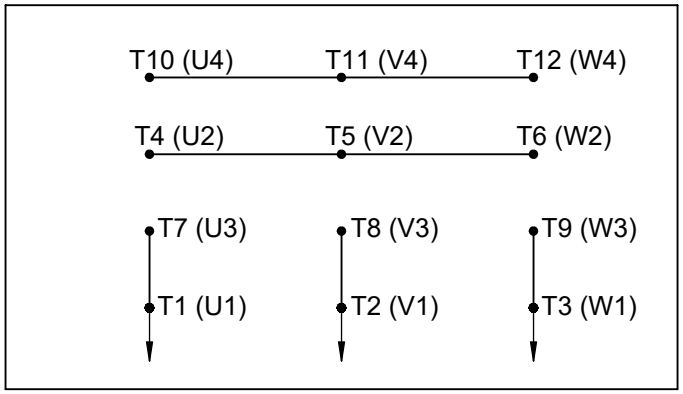

DELTA RUN

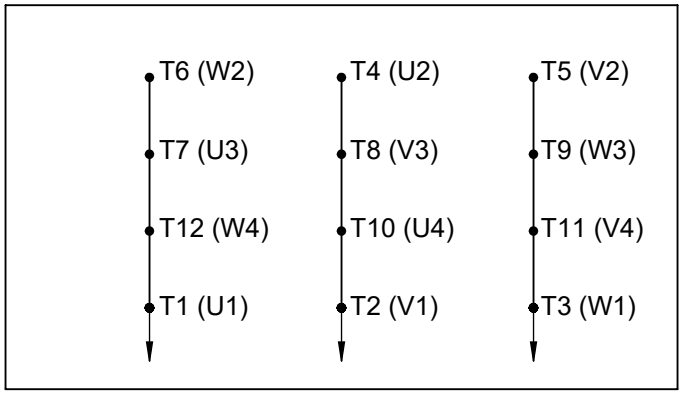

4/2 CKTY △

DRAWING REVISION E	REVISION BY SB	REV DATE/© DATE 08/01/2025	PRIMARY DIMENSIONS ARE INCH mm DIMENSIONS IN [BRACKETS] ARE FOR REFERENCE ONLY	DRAWN BY BLR	marathon™
REQUEST NUMBER CR-0023654	APPROVED BY SBD	DATE 08/01/2025		DATE 03-09-1998	
REQUEST NUMBER DESCRIPTION DRAWING TITLE BLOCK UPDATED				APPROVED BY GK	DESCRIPTION CONN DIAGRAM-EXTERNAL 12 LEAD - DUAL VOLT. - WYE START - DELTA RUN
				DATE 03-23-1998	
				REFERENCE	MATERIAL / PROCESS/FINISH
				THIRD ANGLE PROJECTION	SIZE A / DRAWING NUMBER EE7358 / SHEET 1 OF 1

COPYRIGHT (PER REVISION DATE) MARATHON ELECTRIC, LLC. ALL RIGHTS RESERVED. PROPRIETARY AND CONFIDENTIAL INFORMATION - THIS DOCUMENT IS THE PROPERTY OF MARATHON ELECTRIC, LLC. ("OWNER") AND CONTAINS OWNER'S PROPRIETARY INFORMATION. ANY PERSON, CORPORATION OR OTHER FIRM RECEIVING IT IS DEEMED, BY RECEIVING IT, TO AGREE THAT IT, AND/OR ANY PART OF IT, SHALL NOT BE DISCLOSED TO ANY PERSON, CORPORATION OR OTHER ENTITY, DUPLICATED, AND/OR USED, EXCEPT AS EXPRESSLY APPROVED IN WRITING IN ADVANCE BY OWNER. THIS DOCUMENT SHALL BE RETURNED TO OWNER UPON REQUEST. IT MAY BE SUBJECT TO CERTAIN RESTRICTIONS UNDER APPLICABLE EXPORT CONTROL LAWS AND REGULATIONS.