marathon®

# Fire Pump Motors

**Model No:** 364TSTFS14009
**Catalog No:** Y1622

Fire Pump Motor, 60 HP, 3 Ph, 60 Hz, 230/460 V, 3600 RPM, 364TS Frame, TEFC

©2026 Marathon, All Rights Reserved.

marathon®

## Product Information Packet: Model No: 364TSTFS14009, Catalog No: Y1622  Fire Pump Motor, 60 HP, 3 Ph, 60 Hz, 230/460 V, 3600 RPM, 364TS Frame, TEFC

### Nameplate Specifications

| | | | |
|---|---|---|---|
| Phase | **3** | Output HP | **60 Hp** |
| Output KW | **45.0 kW** | Voltage | **230/460 V** |
| Speed | **3555 r/min** | Synchronous RPM | **3600 r/min** |
| Service Factor | **1.15** | Frame | **364TS** |
| Enclosure | **Totally Enclosed Fan Cooled** | Thermal Protection | **No Protection** |
| Efficiency | **93 %** | Ambient Temperature | **40 °C** |
| Frequency | **60 Hz** | Current | **138.0/69.0 A** |
| Power Factor | **88** | Duty | **Continuous** |
| Insulation Class | **F** | Design Code | **B** |
| KVA Code | **F** | Drive End Bearing Size | **6316** |
| Opp Drive End Bearing Size | **6313** | UL | **Listed** |
| CSA | **Y** | CE | **Y** |
| IP Code | **43** | Number of Speeds | **1** |

### Technical Specifications

| | | | |
|---|---|---|---|
| Electrical Type | **Squirrel Cage Induction Run** | Starting Method | **Wye Start Delta Run** |
| Poles | **2** | Rotation | **Reversible** |
| Resistance Main | **.099 O** | Mounting | **Rigid Base** |
| Motor Orientation | **Horizontal** | Drive End Bearing | **Ball** |
| Opp Drive End Bearing | **Ball** | Frame Material | **Cast Iron** |
| Shaft Type | **TS** | Overall Length | **29.38 in** |
| Frame Length | **13.5 in** | Shaft Diameter | **1 7/8 in** |
| Shaft Extension | **4.00 in** | Assembly/Box Mounting | **F1/F2 Capable** |

### Drawings

| | | | |
|---|---|---|---|
| Connection Drawing | **EE7308AA** | Outline Drawing | **B-SS504620-1350** |

This is an uncontrolled document once printed or downloaded and is subject to change without notice. Date Created: 15/10/2026

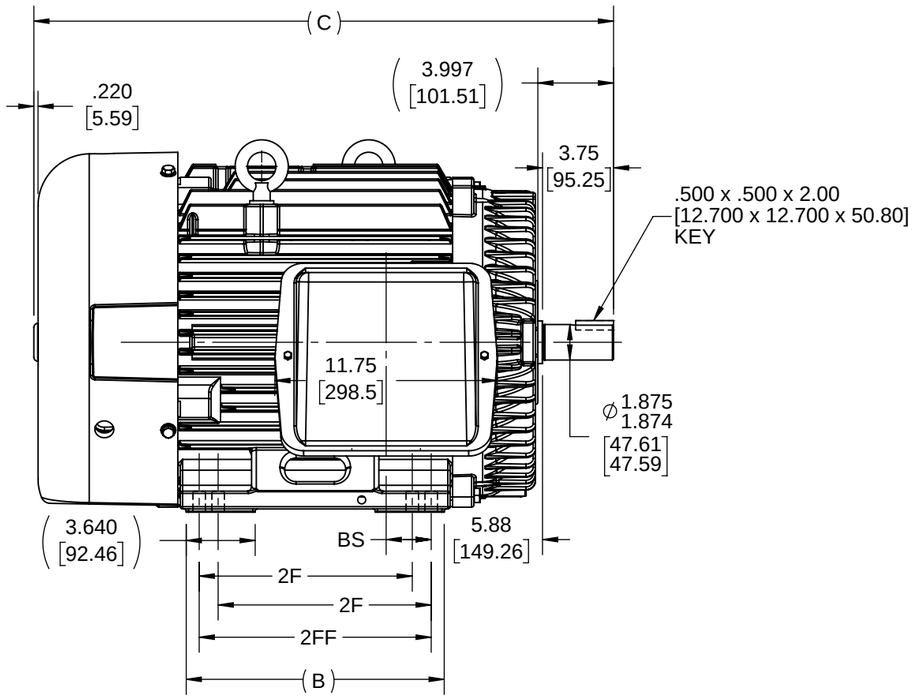


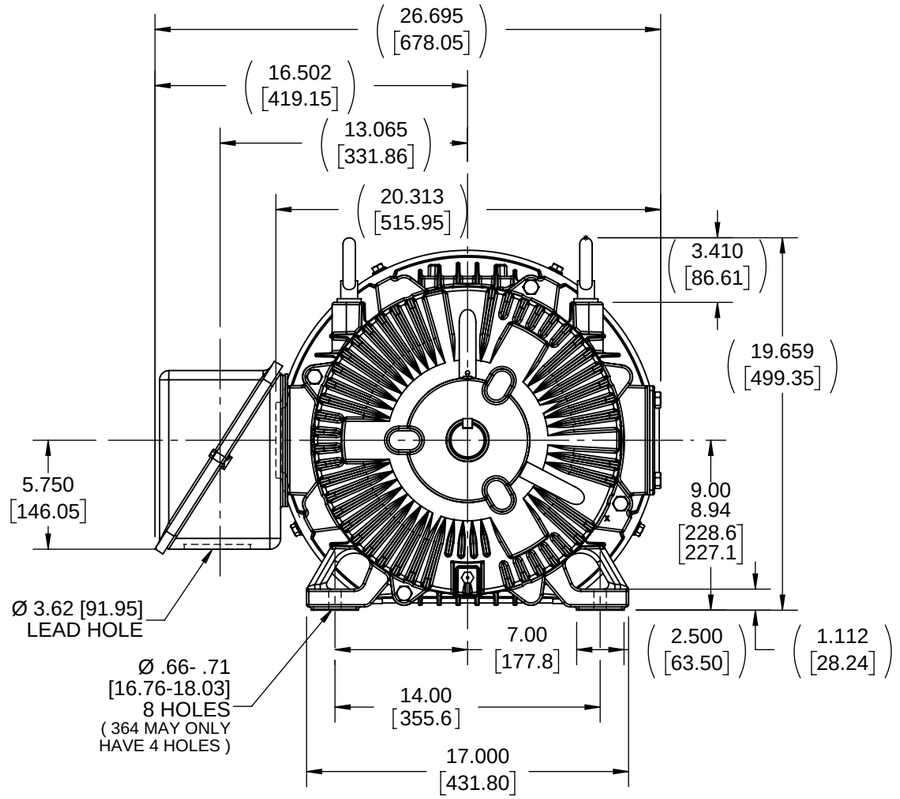


## F2 VIEW

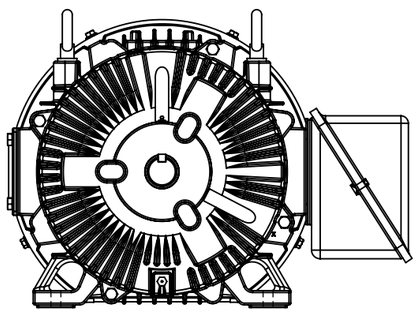

NOTES:
1. CONDUIT BOX CAN BE ROTATED IN 90° STEPS.
2. DIMENSION IN [ ] DESIGNATE MILLIMETERS.

| DASH | FRAME | B | C | 2F | 2FF | BS |
|---|---|---|---|---|---|---|
| 1350 | 364TS | 13.25 [336.55] | 29.60 [751.94] | 11.25 [285.75] | - - - | 5.62 [142.75] |
| 1450 | 364/365TS | 14.25 [361.95] | 30.60 [777.34] | 11.25 [285.75] | 12.25 [311.15] | 2.38 [60.45] |

FRAME 364 - 1350

NOTE:
1. ALTERNATE FRAME DRAWING.
2. MODELS USING ALTERNATE FRAME 553485A.

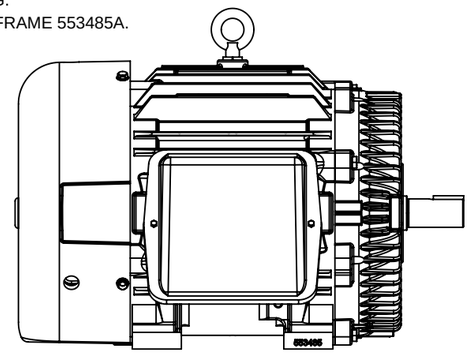

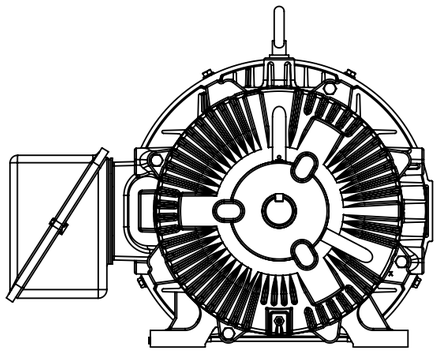

COPYRIGHT (PER REVISION DATE) MARATHON ELECTRIC, LLC. ALL RIGHTS RESERVED. PROPRIETARY AND CONFIDENTIAL INFORMATION - THIS DOCUMENT IS THE PROPERTY OF MARATHON ELECTRIC, LLC. ("OWNER") AND CONTAINS OWNER'S PROPRIETARY INFORMATION. ANY PERSON, CORPORATION OR OTHER FIRM RECEIVING IT IS DEEMED, BY RECEIVING IT, TO AGREE THAT IT, AND/OR ANY PART OF IT, SHALL NOT BE DISCLOSED TO ANY PERSON, CORPORATION OR OTHER ENTITY, DUPLICATED, AND/OR USED, EXCEPT AS EXPRESSLY APPROVED IN WRITING IN ADVANCE BY OWNER. THIS DOCUMENT SHALL BE RETURNED TO OWNER UPON REQUEST. IT MAY BE SUBJECT TO CERTAIN RESTRICTIONS UNDER APPLICABLE EXPORT CONTROL LAWS AND REGULATIONS.

| | | |
|---|---|---|
| DRAWING REVISION: E | REVISION BY: BISWA | REV DATE/© DATE: 20/05/2026 |
| REQUEST NUMBER: CR-0026330 | APPROVED BY: RMS | DATE: 20/05/2026 |
| REQUEST NUMBER DESCRIPTION: DRAWING TITLE BLOCK UPDATED | | |

TOLERANCES (EXCEPT AS NOTED):

| DEC. | INCH | mm | ANGLE |
|---|---|---|---|
| .X | ±0.1 | [±3] | ±0.5° |
| .XX | ±0.01 | [±0.3] | |
| .XXX | ±0.005 | [±0.13] | |
| .XXXX | ±0.0005 | [±0.013] | |

REMOVE BURRS & BREAK SHARP EDGES: .003/.015 [.08/.38] X 45°
CORNER FILLETS: R.02 [.5]
MACHINED SURFACES: 125 INCH / 3.2 mm
mm DIMENSIONS IN [BRACKETS] ARE FOR REFERENCE ONLY

| | | |
|---|---|---|
| DRAWN BY: TLB | marathon™ | |
| DATE: 04-29-1988 | | |
| APPROVED BY: ML | DESCRIPTION: OUTLINE 360TS FR.- TEFC- (STD.) | |
| DATE: 04-29-1988 | | |
| REFERENCE | MATERIAL | PROCESS/FINISH |
| THIRD ANGLE PROJECTION | SIZE: B | DRAWING NUMBER: SS504620 / SHEET: 1 OF 1 |

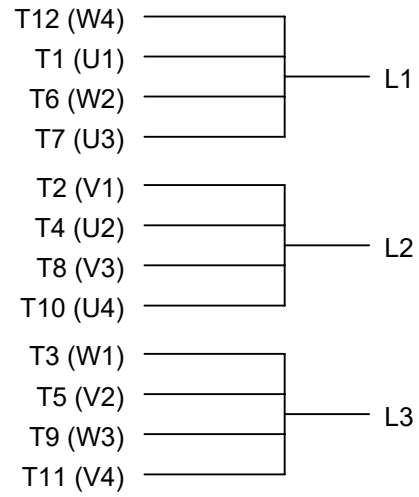


LOW VOLTAGE

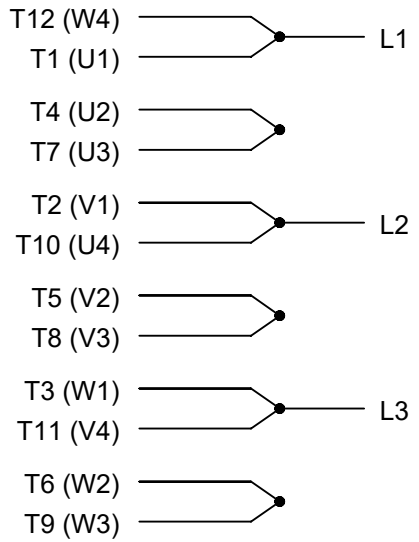


HIGH VOLTAGE

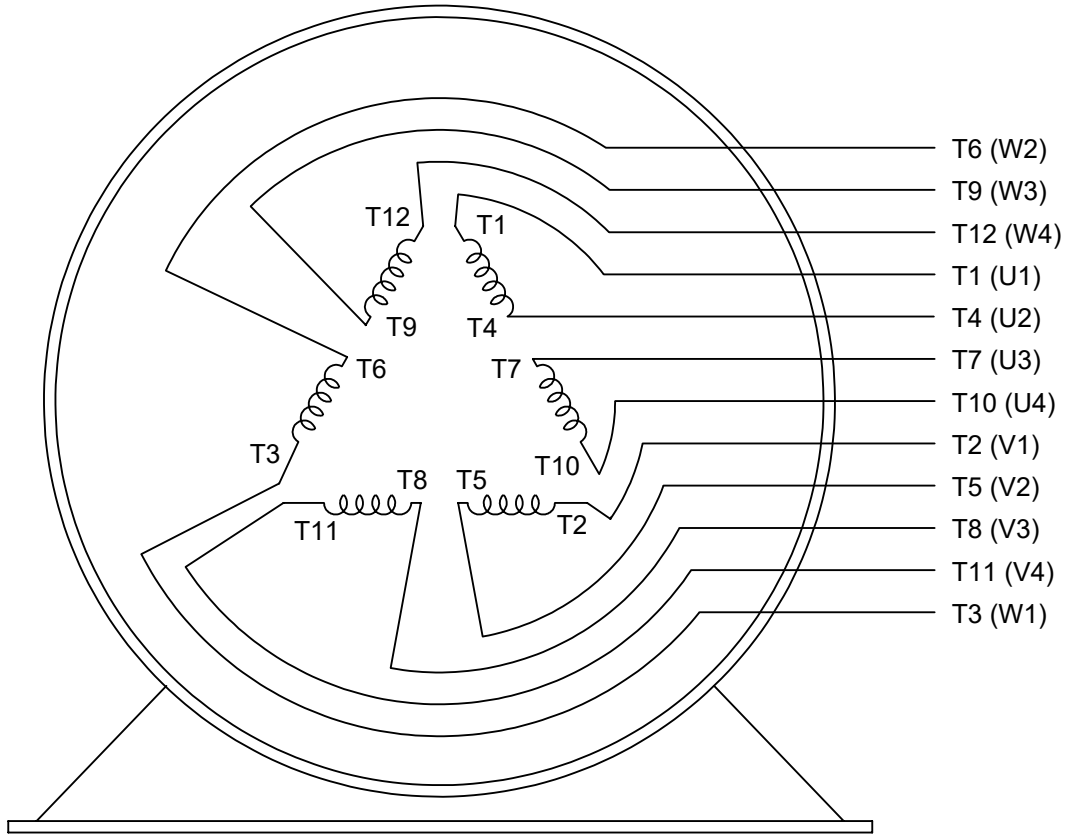


VIEW OF TERMINAL END

| | | | | | |
|---|---|---|---|---|---|
| DRAWING REVISION: L | REVISION BY: SB | REV DATE/© DATE: 08/01/2025 | PRIMARY DIMENSIONS ARE INCH<br>mm DIMENSIONS IN [BRACKETS]<br>ARE FOR REFERENCE ONLY | DRAWN BY: LZ | marathon™ |
| REQUEST NUMBER: CR-0023654 | APPROVED BY: SBD | DATE: 08/01/2025 | | DATE: 01-12-1994 | |
| REQUEST NUMBER DESCRIPTION: DRAWING TITLE BLOCK UPDATED | | | | APPROVED BY: GK | DESCRIPTION: CONN DIAGRAM-EXTERNAL<br>3Ø-2/1 DELTA-12 LEADS |
| | | | | DATE: 01-14-1994 | |
| | | | | REFERENCE | MATERIAL / PROCESS/FINISH |
| | | | | THIRD ANGLE PROJECTION | SIZE: A / DRAWING NUMBER: EE7308AA / SHEET: 1 OF 1 |

COPYRIGHT (PER REVISION DATE) MARATHON ELECTRIC, LLC. ALL RIGHTS RESERVED. PROPRIETARY AND CONFIDENTIAL INFORMATION - THIS DOCUMENT IS THE PROPERTY OF MARATHON ELECTRIC, LLC. ("OWNER") AND CONTAINS OWNER'S PROPRIETARY INFORMATION. ANY PERSON, CORPORATION OR OTHER FIRM RECEIVING IT IS DEEMED, BY RECEIVING IT, TO AGREE THAT IT, AND/OR ANY PART OF IT, SHALL NOT BE DISCLOSED TO ANY PERSON, CORPORATION OR OTHER ENTITY, DUPLICATED, AND/OR USED, EXCEPT AS EXPRESSLY APPROVED IN WRITING IN ADVANCE BY OWNER. THIS DOCUMENT SHALL BE RETURNED TO OWNER UPON REQUEST. IT MAY BE SUBJECT TO CERTAIN RESTRICTIONS UNDER APPLICABLE EXPORT CONTROL LAWS AND REGULATIONS.

Uncontrolled Copy

# Data Sheet

**Date:** 12/10/2018
**Customer:**
**Attention:**
**Submitted by:** FAREEDA DUDEKULA

marathon® electric

364TSTFS14009

**Submittal**

Data @ 460 V

## Motor Load Data

| Load | 0% | 25% | 50% | 75% | 100% | 115% | 125% | LR | |
|---|---|---|---|---|---|---|---|---|---|
| Current (Amps) | 18.5 | 25.0 | 37.5 | 52.5 | 69.0 | 79.0 | 86.0 | 410 | |
| Torque (ft-lb) | 0.00 | 22.0 | 44.0 | 66.0 | 88.6 | 102 | 111 | 140 | |
| RPM | 3600 | 3590 | 3580 | 3570 | 3555 | 3,550 | 3545 | 0 | |
| Efficiency (%) | | 87.5 | 91.7 | 93.0 | 93.0 | 92.4 | 91.7 | | |
| P.F. (%) | 10.0 | 64.0 | 81.0 | 86.0 | 88.0 | 88.0 | 88.0 | 30.0 | |

## Motor Speed Data

| | LR | Pull-Up | BD | Rated | Idle |
|---|---|---|---|---|---|
| Speed (RPM) | 0 | 1800 | 3375 | 3555 | 3600 |
| Current (Amps) | 410 | 375 | 235 | 69.0 | 18.5 |
| Torque (ft-lb) | 140 | 120 | 210 | 88.6 | 0.00 |

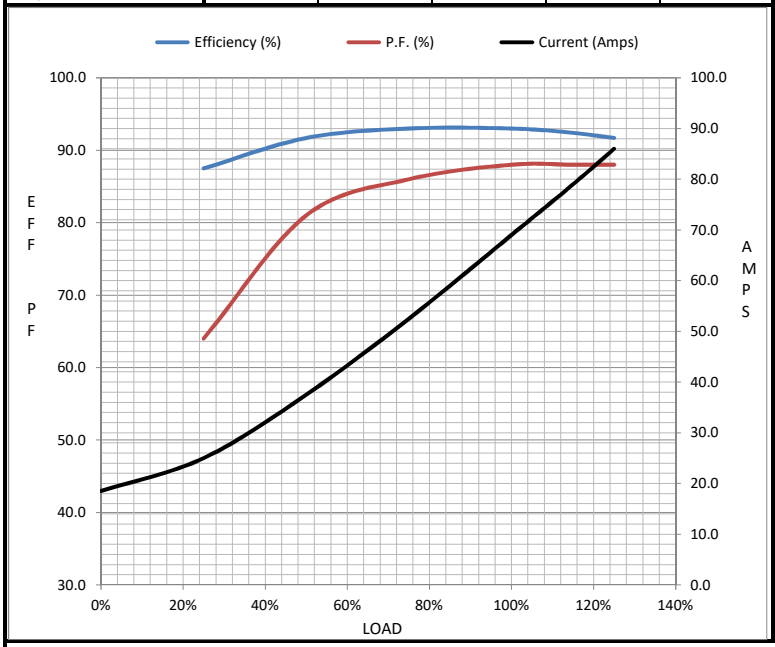


## Information Block

| | | |
|---|---|---|
| HP | 60.0 | |
| Sync. RPM | 3600 | |
| Frame | 364 | |
| Enclosure | TEFC | |
| Construction | TFS | |
| Voltage | 230/460 | V |
| Frequency | 60 | Hz |
| Design | B | |
| LR Code letter | F | |
| Service Factor | 1.15 | |
| Temp Rise @ FL | 75 | ° C |
| Duty | CONT | |
| Ambient | 40 | ° C |
| Elevation | 1,000 | feet |
| Rotor/Shaft wk² | 6.9 | Lb-Ft² |
| Ref Wdg | T364282 NONE | |
| Sound Pressure @ 1M | 78 | dBA |
| VFD Rating | NONE | |
| Outline Dwg | B-SS504620-1350 | |
| Conn. Diag | A-EE7308AA | |

Additional Specifications:

0

0

EQUIV CKT (OHMS / PHASE)

| R1 | R2 | X1 | X2 | Xm |
|---|---|---|---|---|
| 0.0710 | 0.0470 | 0.4400 | 0.4540 | 14.3790 |

## Speed -Torque Curve

