marathon®

Fire Pump Motors

Model No: 364TSTDCD4337
Catalog No: U519A

Fire Pump Motor, 60 HP, 3 Ph, 60 Hz, 190/380-400 V, 1800 RPM, 364TS Frame, DP

©2026 Marathon, All Rights Reserved.

marathon®

Product Information Packet: Model No: 364TSTDCD4337, Catalog No: U519A Fire Pump Motor, 60 HP, 3 Ph, 60 Hz, 190/380-400 V, 1800 RPM, 364TS Frame, DP

Nameplate Specifications

Phase	**3**	Output HP	**60 Hp**
Output KW	**45.0 kW**	Voltage	**190/380-400 V**
Speed	**1780 r/min**	Synchronous RPM	**1800 r/min**
Service Factor	**1.15**	Frame	**364TS**
Enclosure	**Drip Proof**	Thermal Protection	**No Protection**
Efficiency	**93.6 %**	Ambient Temperature	**50 °C**
Frequency	**60 Hz**	Current	**167.0/83.5-80.0 A**
Power Factor	**86**	Duty	**Continuous**
Insulation Class	**F**	Design Code	**B**
KVA Code	**F**	Drive End Bearing Size	**6314**
Opp Drive End Bearing Size	**6313**	UL	**Listed**
CSA	**Y**	CE	**Y**
IP Code	**23**	Number of Speeds	**1**

Technical Specifications

Electrical Type	**Squirrel Cage Induction Run**	Starting Method	**Part Wdg Start & Wye Start Delta Run**
Poles	**4**	Rotation	**Reversible**
Resistance Main	**.168 O**	Mounting	**Rigid Base**
Motor Orientation	**Horizontal**	Drive End Bearing	**Ball**
Opp Drive End Bearing	**Ball**	Frame Material	**Cast Iron**
Shaft Type	**TS**	Overall Length	**29.57 in**
Frame Length	**17.32 in**	Shaft Diameter	**1 7/8 in**
Shaft Extension	**3.75 in**	Assembly/Box Mounting	**F1/F2 Capable**

Drawings

Connection Drawing	**EE7308AA**	Outline Drawing	**SS620113**

This is an uncontrolled document once printed or downloaded and is subject to change without notice. Date Created: 15/10/2026

Uncontrolled Copy

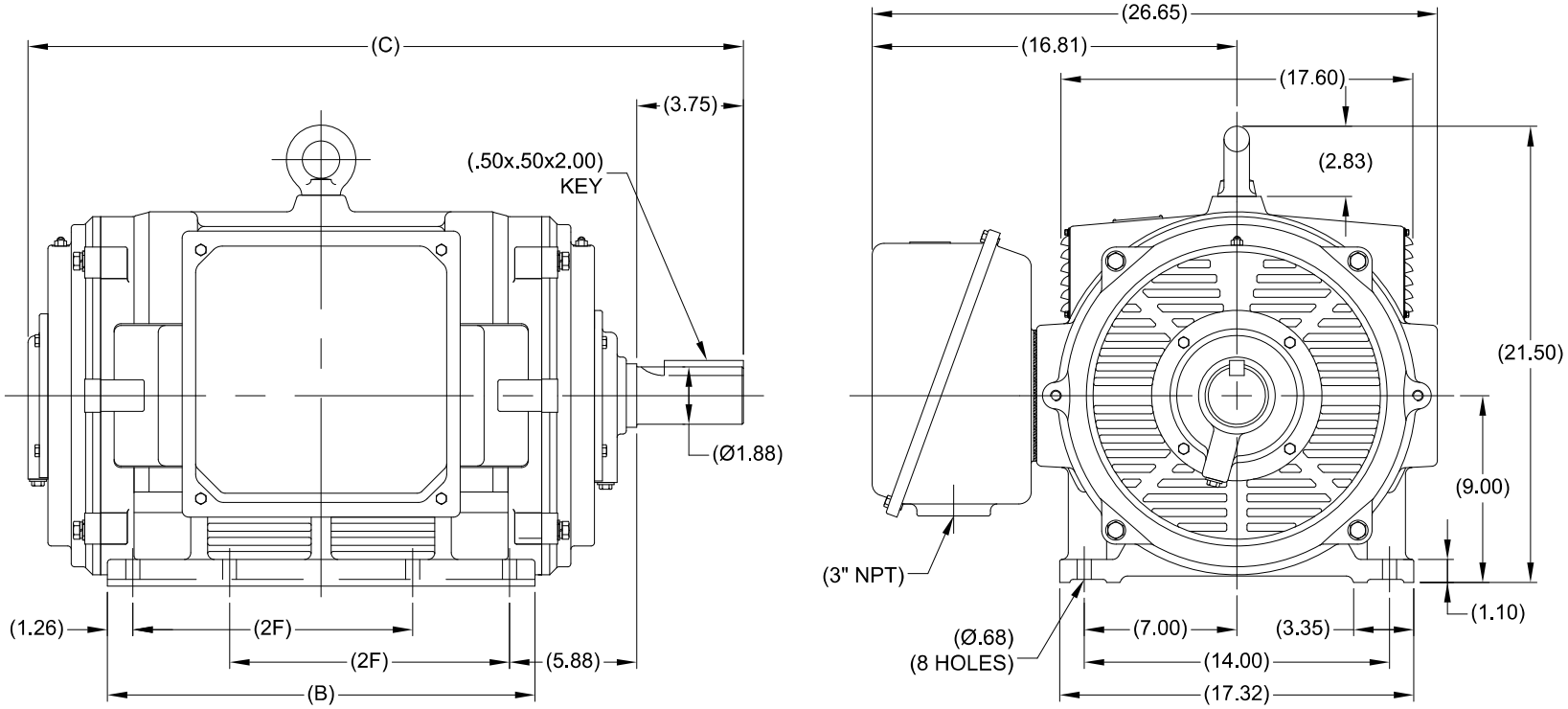

(MAY NOT BE TO SCALE)

(DIMENSIONS IN TABLE ARE CONSIDERED REFFERENCE)

364TSTDCA4026	364TS	29.57	17.32	11.25
365TSTDCA4026	365TS	31.14	18.90	12.25
MODEL	FRAME	C	B	2F

DRAWING REVISION: D	REVISION BY: SB	REV DATE/ © DATE: 05/20/2026
REQUEST NUMBER: CR-0026330	APPROVED BY: RMS	DATE: 05/20/2026
REQUEST NUMBER DESCRIPTION: DRAWING TITLE BLOCK UPDATED		

COPYRIGHT (PER REVISION DATE) MARATHON ELECTRIC, LLC. ALL RIGHTS RESERVED. PROPRIETARY AND CONFIDENTIAL INFORMATION - THIS DOCUMENT IS THE PROPERTY OF MARATHON ELECTRIC, LLC. ("OWNER") AND CONTAINS OWNER'S PROPRIETARY INFORMATION. ANY PERSON, CORPORATION OR OTHER FIRM RECEIVING IT IS DEEMED, BY RECEIVING IT, TO AGREE THAT IT, AND/OR ANY PART OF IT, SHALL NOT BE DISCLOSED TO ANY PERSON, CORPORATION OR OTHER ENTITY, DUPLICATED, AND/OR USED, EXCEPT AS EXPRESSLY APPROVED IN WRITING IN ADVANCE BY OWNER. THIS DOCUMENT SHALL BE RETURNED TO OWNER UPON REQUEST. IT MAY BE SUBJECT TO CERTAIN RESTRICTIONS UNDER APPLICABLE EXPORT CONTROL LAWS AND REGULATIONS.

TOLERANCES (EXCEPT AS NOTED):

DEC.	INCH	mm	ANGLE
.X	±0.1	[±3]	±7' 30"
.XX	±0.03	[±0.8]	
.XXX	±0.005	[±0.13]	
.XXXX	±0.0005	[±0.013]	

REMOVE BURRS & BREAK SHARP EDGES: .003/.015 [.08/.38] X 45 °
CORNER FILLETS: R.02 [.5]
MACHINED SURFACES: 200 / INCH 5.1 / mm
mm DIMENSIONS IN [BRACKETS] ARE FOR REFERENCE ONLY

DRAWN BY	SB
DATE	01/14/2008
APPROVED BY	MSG
DATE	11/09/2007
REFERENCE	
THIRD ANGLE PROJECTION	

marathon™

DESCRIPTION: OUTLINE
364/365 TSTDCA4026 - ODP

MATERIAL | PROCESS/FINISH

SIZE: B | DRAWING NUMBER: SS620113 | SHEET: 1 OF 1

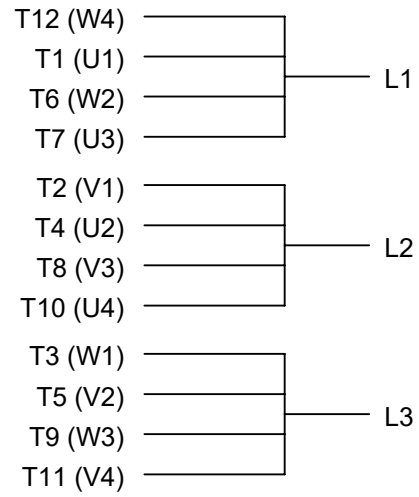

LOW VOLTAGE

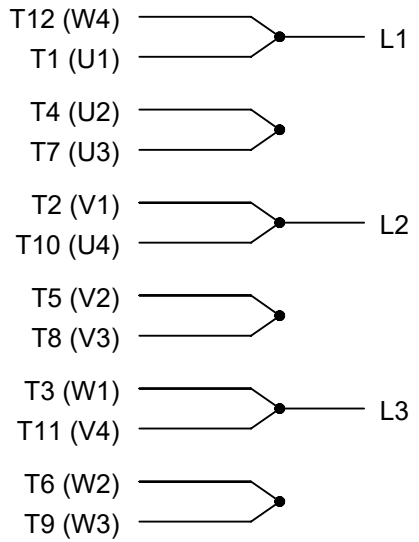

HIGH VOLTAGE

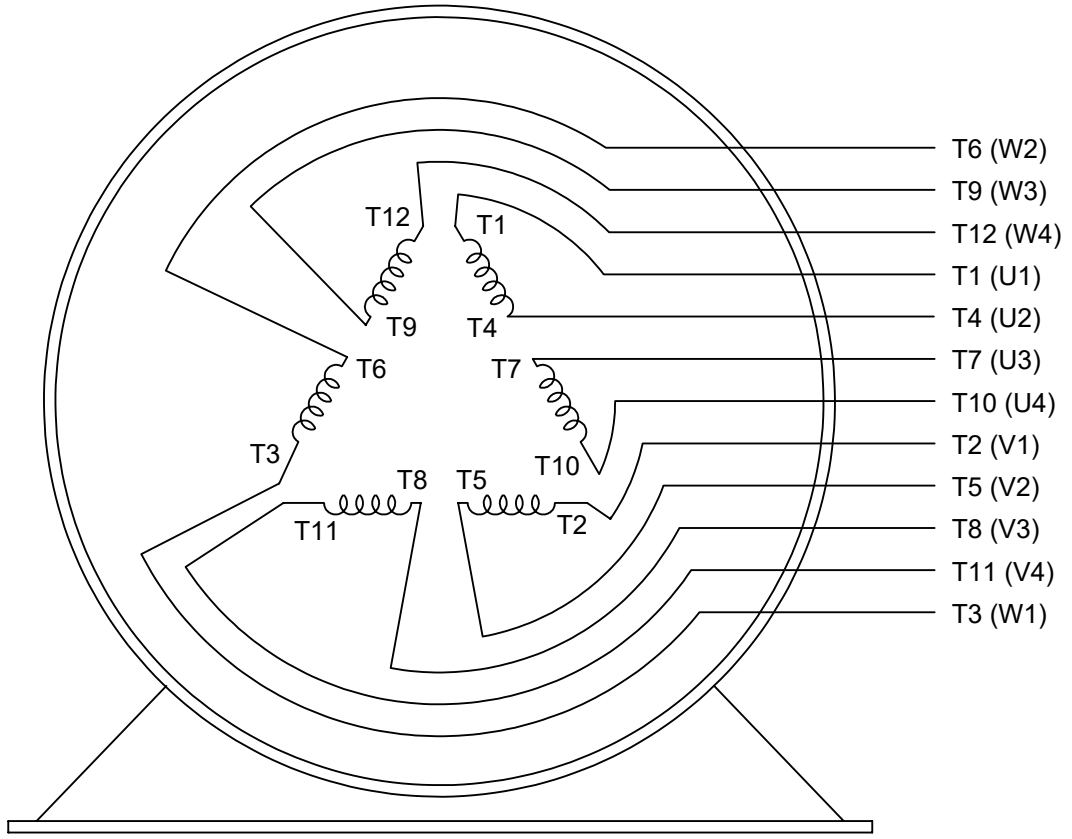

VIEW OF TERMINAL END

DRAWING REVISION: L	REVISION BY: SB	REV DATE/© DATE: 08/01/2025	PRIMARY DIMENSIONS ARE INCH mm DIMENSIONS IN [BRACKETS] ARE FOR REFERENCE ONLY	DRAWN BY: LZ	marathon™
REQUEST NUMBER: CR-0023654	APPROVED BY: SBD	DATE: 08/01/2025		DATE: 01-12-1994	
REQUEST NUMBER DESCRIPTION: DRAWING TITLE BLOCK UPDATED				APPROVED BY: GK	DESCRIPTION: CONN DIAGRAM-EXTERNAL 3Ø-2/1 DELTA-12 LEADS
				DATE: 01-14-1994	
				REFERENCE	MATERIAL / PROCESS/FINISH
				THIRD ANGLE PROJECTION	SIZE: A / DRAWING NUMBER: EE7308AA / SHEET: 1 OF 1

COPYRIGHT (PER REVISION DATE) MARATHON ELECTRIC, LLC. ALL RIGHTS RESERVED. PROPRIETARY AND CONFIDENTIAL INFORMATION - THIS DOCUMENT IS THE PROPERTY OF MARATHON ELECTRIC, LLC. ("OWNER") AND CONTAINS OWNER'S PROPRIETARY INFORMATION. ANY PERSON, CORPORATION OR OTHER FIRM RECEIVING IT IS DEEMED, BY RECEIVING IT, TO AGREE THAT IT, AND/OR ANY PART OF IT, SHALL NOT BE DISCLOSED TO ANY PERSON, CORPORATION OR OTHER ENTITY, DUPLICATED, AND/OR USED, EXCEPT AS EXPRESSLY APPROVED IN WRITING IN ADVANCE BY OWNER. THIS DOCUMENT SHALL BE RETURNED TO OWNER UPON REQUEST. IT MAY BE SUBJECT TO CERTAIN RESTRICTIONS UNDER APPLICABLE EXPORT CONTROL LAWS AND REGULATIONS.

Uncontrolled Copy

Data Sheet

Date: 12/14/2018
Customer:
Attention:
Submitted by: FAREEDA DUDEKULA

marathon® electric

364TSTDCD4337

Submittal

Data @ 400 V

Motor Load Data

Load	0%	25%	50%	75%	100%	115%	125%	LR	
Current (Amps)	21.3	28.2	42.6	59.8	79.4	92.0	101	449	
Torque (ft-lb)	0.00	44.0	88.0	132	177	204	222	290	
RPM	1800	1795	1790	1785	1780	1,775	1772	0	
Efficiency (%)		91.7	93.0	93.6	93.6	93.0	92.4		
P.F. (%)	5.0	62.0	80.0	85.0	86.0	87.0	87.0	38.0	

Motor Speed Data

	LR	Pull-Up	BD	Rated	Idle
Speed (RPM)	0	900	1700	1780	1800
Current (Amps)	449	403	242	79.4	21.3
Torque (ft-lb)	290	275	372	177	0.00

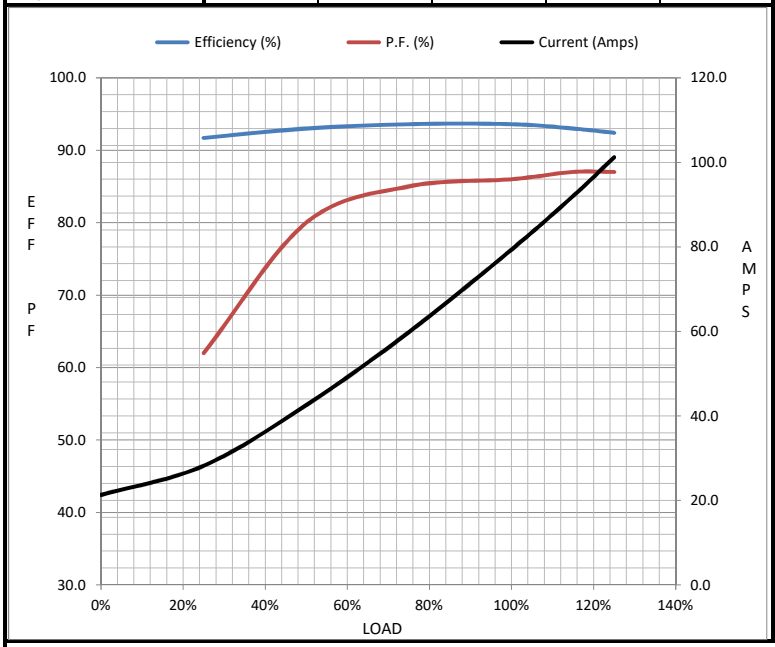

Information Block

HP	60.0	
Sync. RPM	1800	
Frame	364	
Enclosure	DP	
Construction	TDC	
Voltage	190/380-400	V
Frequency	60	Hz
Design	B	
LR Code letter	F	
Service Factor	1.15	
Temp Rise @ FL	45	° C
Duty	CONT	
Ambient	40	° C
Elevation	1,000	feet
Rotor/Shaft wk²	0.00	Lb-Ft²
Ref Wdg	IE2L2254102 NONE	
Sound Pressure @ 1M	75	dBA
VFD Rating	NONE	
Outline Dwg	SS620748	
Conn. Diag	EE7308AA	
Additional Specifications:		
0		
0		

EQUIV CKT (OHMS / PHASE)

R1	R2	X1	X2	Xm
0.0750	0.0340	0.3330	0.4400	16.8100

