marathon®

Fire Pump Motors

Model No: 364TSTDCD4035
Catalog No: U1113

Fire Pump Motor, 60 HP, 3 Ph, 60 Hz, 575 V, 1800 RPM, 364TS Frame, DP

©2026 Marathon, All Rights Reserved.

marathon®

Product Information Packet: Model No: 364TSTDCD4035, Catalog No: U1113 Fire Pump Motor, 60 HP, 3 Ph, 60 Hz, 575 V, 1800 RPM, 364TS Frame, DP

Nameplate Specifications

Phase	**3**	Output HP	**60 Hp**
Output KW	**45.0 kW**	Voltage	**575 V**
Speed	**1780 r/min**	Synchronous RPM	**1800 r/min**
Service Factor	**1.15**	Frame	**364TS**
Enclosure	**Drip Proof**	Thermal Protection	**No Protection**
Efficiency	**93.6 %**	Ambient Temperature	**50 °C**
Frequency	**60 Hz**	Current	**55.0 A**
Power Factor	**86**	Duty	**Continuous**
Insulation Class	**F**	Design Code	**B**
KVA Code	**F**	Drive End Bearing Size	**6314**
Opp Drive End Bearing Size	**6313**	UL	**Listed**
CSA	**Y**	CE	**Y**
IP Code	**23**	Number of Speeds	**1**

Technical Specifications

Electrical Type	**Squirrel Cage Induction Run**	Starting Method	**Part Wdg Start & Wye Start Delta Run**
Poles	**4**	Rotation	**Reversible**
Resistance Main	**.168 O**	Mounting	**Rigid Base**
Motor Orientation	**Horizontal**	Drive End Bearing	**Ball**
Opp Drive End Bearing	**Ball**	Frame Material	**Cast Iron**
Shaft Type	**TS**	Overall Length	**29.57 in**
Frame Length	**17.32 in**	Shaft Diameter	**1 7/8 in**
Shaft Extension	**3.75 in**	Assembly/Box Mounting	**F1/F2 Capable**

Drawings

Connection Drawing	**EE7300BH**	Outline Drawing	**SS620748-364TS**

This is an uncontrolled document once printed or downloaded and is subject to change without notice. Date Created: 16/10/2026

DASH NO.	B	C	D	E	2E	2F	2FF	BA	BS	MOUNTING	FRAME
100	16.93	29.44	9.00	7.00	14.00	11.25	12.25	5.88	12.52	F1 OR F2	364TS
200		31.01							14.09		365TS

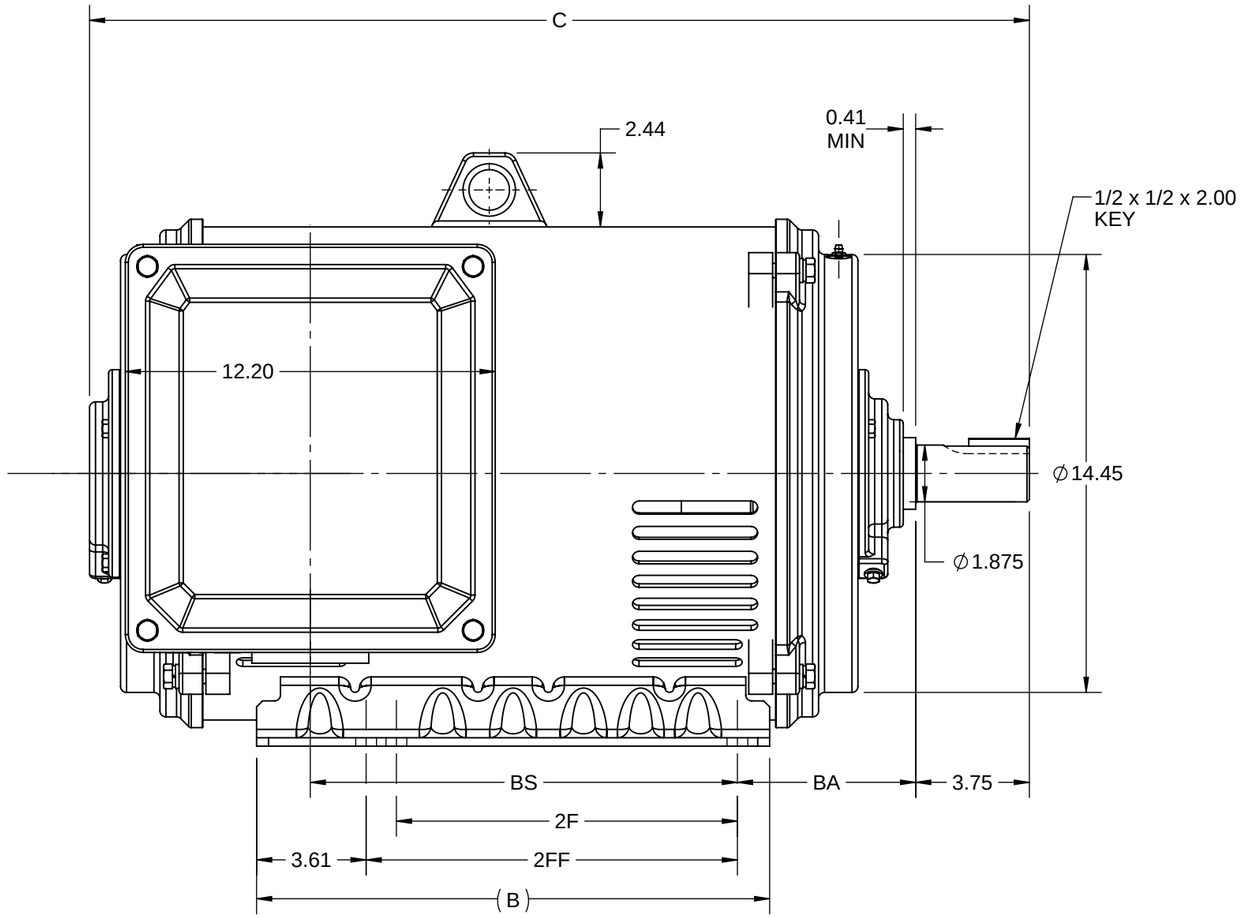

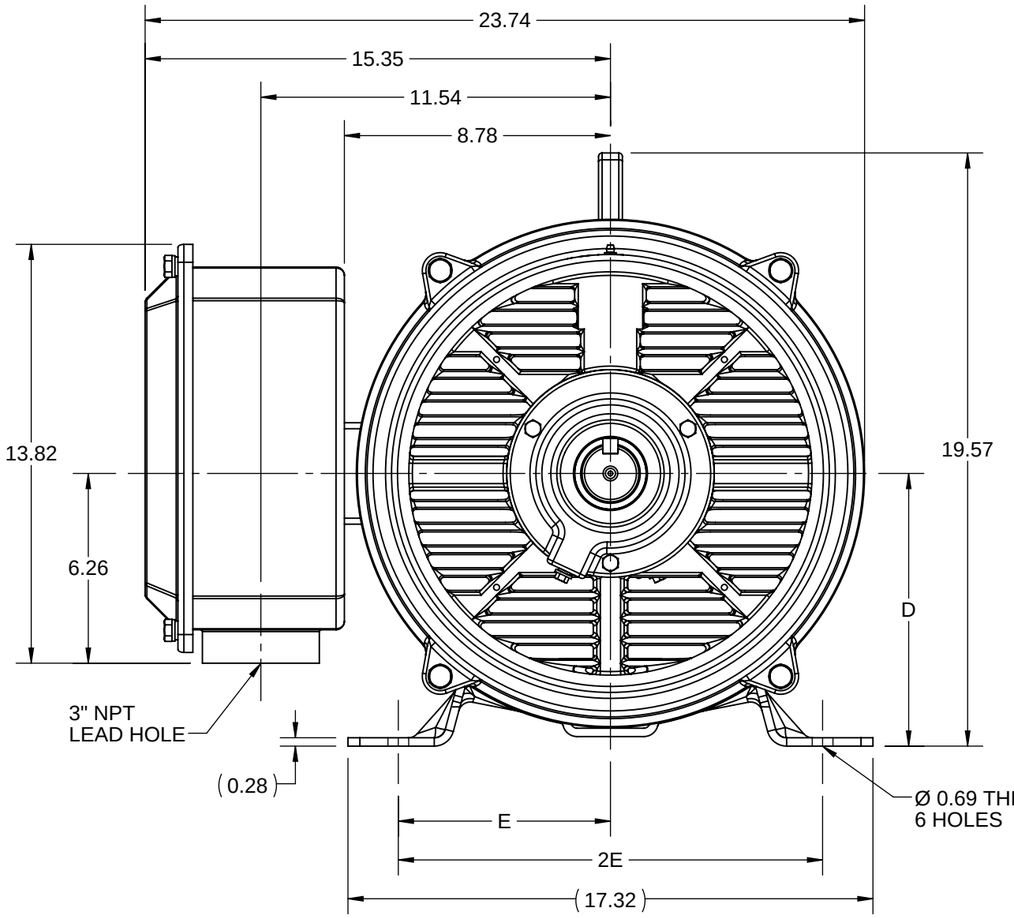

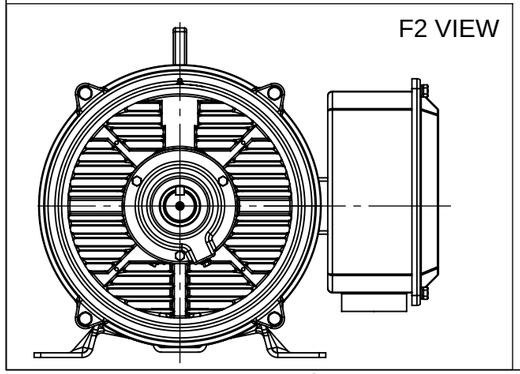

DRAWING REVISION	REVISION BY	REV DATE/© DATE
D	SV	05/22/2026
REQUEST NUMBER	APPROVED BY	DATE
CR-0026372	RMS	05/22/2026

REQUEST NUMBER DESCRIPTION
DRAWING TITLE BLOCK UPDATED

COPYRIGHT (PER REVISION DATE) MARATHON ELECTRIC, LLC. ALL RIGHTS RESERVED. PROPRIETARY AND CONFIDENTIAL INFORMATION - THIS DOCUMENT IS THE PROPERTY OF MARATHON ELECTRIC, LLC. ("OWNER") AND CONTAINS OWNER'S PROPRIETARY INFORMATION. ANY PERSON, CORPORATION OR OTHER FIRM RECEIVING IT IS DEEMED, BY RECEIVING IT, TO AGREE THAT IT, AND/OR ANY PART OF IT, SHALL NOT BE DISCLOSED TO ANY PERSON, CORPORATION OR OTHER ENTITY, DUPLICATED, AND/OR USED, EXCEPT AS EXPRESSLY APPROVED IN WRITING IN ADVANCE BY OWNER. THIS DOCUMENT SHALL BE RETURNED TO OWNER UPON REQUEST. IT MAY BE SUBJECT TO CERTAIN RESTRICTIONS UNDER APPLICABLE EXPORT CONTROL LAWS AND REGULATIONS.

PRIMARY DIMENSIONS ARE INCH
mm DIMENSIONS IN [BRACKETS]
ARE FOR REFERENCE ONLY

DRAWN BY	marathon™
ZHU XIAOWEI	
DATE	
27/04/2021	
APPROVED BY	DESCRIPTION
DATE	OUTLINE
	364/365TS FR NEMA ODP RS
REFERENCE	MATERIAL / PROCESS/FINISH
THIRD ANGLE PROJECTION	SIZE B / DRAWING NUMBER SS620748 / SHEET 1 OF 1

Uncontrolled Copy

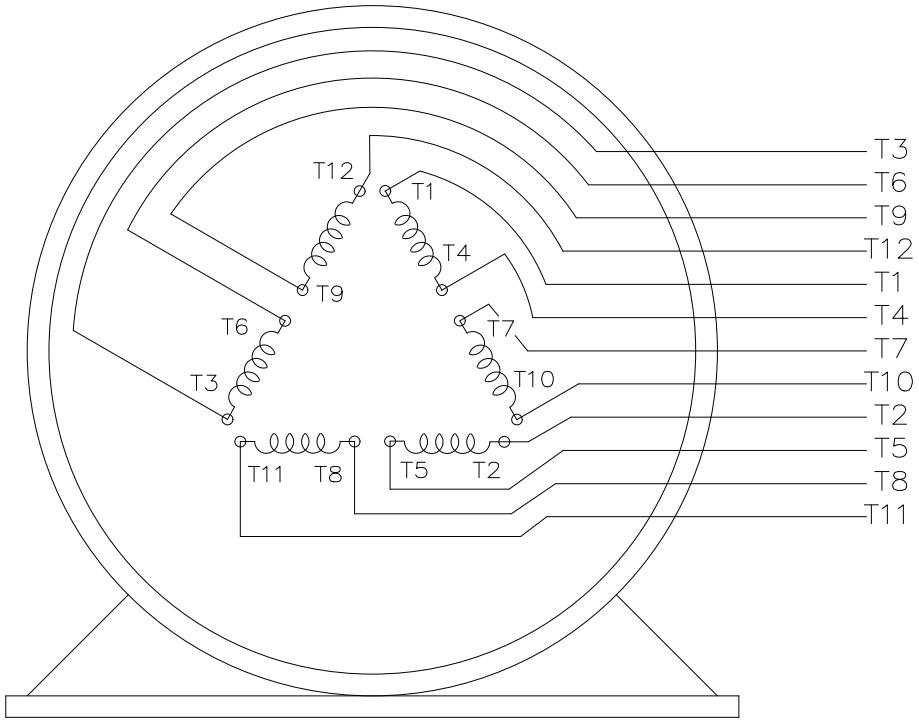

VIEW OF TERMINAL END

T12(W4)
T1(U1)
T6(W2)
T7(U3)
LINE 1

T2(V1)
T4(U2)
T8(V3)
T10(U4)
LINE 2

T3(W1)
T5(V2)
T9(W3)
T11(V4)
LINE 3

DRAWING REVISION: E	REVISION BY: SB	REV DATE/ © DATE: 08/04/2025
REQUEST NUMBER: CR-0023654	APPROVED BY: SBD	DATE: 08/04/2025
REQUEST NUMBER DESCRIPTION: DRAWING TITLE BLOCK UPDATED		

COPYRIGHT (PER REVISION DATE) MARATHON ELECTRIC, LLC. ALL RIGHTS RESERVED.
PROPRIETARY AND CONFIDENTIAL INFORMATION - THIS DOCUMENT IS THE PROPERTY OF MARATHON ELECTRIC, LLC. ("OWNER") AND CONTAINS OWNER'S PROPRIETARY INFORMATION. ANY PERSON, CORPORATION OR OTHER FIRM RECEIVING IT IS DEEMED, BY RECEIVING IT, TO AGREE THAT IT, AND/OR ANY PART OF IT, SHALL NOT BE DISCLOSED TO ANY PERSON, CORPORATION OR OTHER ENTITY, DUPLICATED, AND/OR USED, EXCEPT AS EXPRESSLY APPROVED IN WRITING IN ADVANCE BY OWNER. THIS DOCUMENT SHALL BE RETURNED TO OWNER UPON REQUEST. IT MAY BE SUBJECT TO CERTAIN RESTRICTIONS UNDER APPLICABLE EXPORT CONTROL LAWS AND REGULATIONS.

PRIMARY DIMENSIONS ARE INCH
mm DIMENSIONS IN [BRACKETS]
ARE FOR REFERENCE ONLY

DRAWN BY: RJW	marathon™	
DATE: 02/11/2005		
APPROVED BY: GK	DESCRIPTION: CONNECTION DIAGRAM 12 LEAD - SINGLE VOLTAGE	
DATE: 02/11/2005		
REFERENCE	MATERIAL	PROCESS/FINISH
THIRD ANGLE PROJECTION	SIZE: A / DRAWING NUMBER: EE7300BH	SHEET: 1 OF 1

Uncontrolled Copy

Data Sheet

Date: 12/12/2018
Customer:
Attention:
Submitted by: FAREEDA DUDEKULA

marathon® electric

364TSTDCD4035

Submittal

Data @ 575 V

Motor Load Data

Load	0%	25%	50%	75%	100%	115%	125%	LR	
Current (Amps)	14.8	19.6	29.6	41.6	55.2	64.0	70.4	312	
Torque (ft-lb)	0.00	44.0	88.0	132	177	204	222	290	
RPM	1800	1795	1790	1785	1780	1,775	1772	0	
Efficiency (%)		91.7	93.0	93.6	93.6	93.0	92.4		
P.F. (%)	5.0	62.0	80.0	85.0	86.0	87.0	87.0	38.0	

Motor Speed Data

	LR	Pull-Up	BD	Rated	Idle
Speed (RPM)	0	900	1700	1780	1800
Current (Amps)	312	280	168	55.2	14.8
Torque (ft-lb)	290	275	372	177	0.00

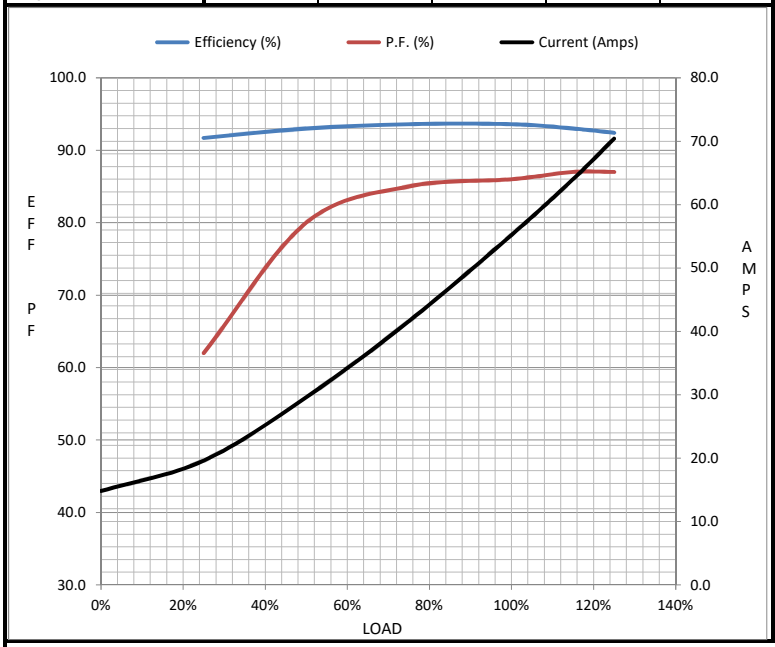

Information Block

HP	60.0	
Sync. RPM	1800	
Frame	364	
Enclosure	DP	
Construction	TDC	
Voltage	575	V
Frequency	60	Hz
Design	B	
LR Code letter	F	
Service Factor	1.15	
Temp Rise @ FL	45	° C
Duty	CONT	
Ambient	40	° C
Elevation	1,000	feet
Rotor/Shaft wk²	0.00	Lb-Ft²
Ref Wdg	IE2L2254102 NONE	
Sound Pressure @ 1M	75	dBA
VFD Rating	NONE	
Outline Dwg	SS620748	
Conn. Diag	EE7300BH	
Additional Specifications:		
0		
0		

EQUIV CKT (OHMS / PHASE)

R1	R2	X1	X2	Xm
0.1550	0.0700	0.6870	0.9090	34.7360

Speed -Torque Curve

