marathon®

Explosion Proof Motors

Model No: 326TSTGS16532
Catalog No: U079A

Explosion Proof Motor, 50 & 40 HP, 3 Ph, 60 & 50 Hz, 230/460 & 190/380 V, 1800 RPM, 326TS Frame, EPFC

©2026 Marathon, All Rights Reserved.

marathon®

Product Information Packet: Model No: 326TSTGS16532, Catalog No: U079A Explosion Proof Motor, 50 & 40 HP, 3 Ph, 60 & 50 Hz, 230/460 & 190/380 V, 1800 RPM, 326TS Frame, EPFC

Nameplate Specifications

Phase	**3**	Output HP	**50 & 40 Hp**
Output KW	**37.0 & 30.0 kW**	Voltage	**230/460 & 190/380 V**
Speed	**1775 & 1475 r/min**	Synchronous RPM	**1800 & 1500 r/min**
Service Factor	**1.0 & 1.0**	Frame	**326TS**
Enclosure	**Explosion Proof Fan cooled**	Thermal Protection	**Thermostat**
Efficiency	**94.5 & 94.1 %**	Ambient Temperature	**50 °C**
Frequency	**60 & 50 Hz**	Current	**120/60 & 118/59 A**
Power Factor	**82**	Duty	**Continuous**
Insulation Class	**F**	Design Code	**B**
KVA Code	**F**	Drive End Bearing Size	**6312**
Opp Drive End Bearing Size	**6311**	UL	**UL Listed And CSA Certified**
CSA	**Y**	CE	**N**
IP Code	**54**	Number of Speeds	**1**
Hazardous Location	**DIV 1 EXP PROOF CL I GR CD CL II GR FG T3C**		

Technical Specifications

Electrical Type	**Squirrel Cage Induction Run**	Starting Method	**Across The Line**
Poles	**4**	Rotation	**Reversible**
Resistance Main	**.112 O**	Mounting	**Rigid Base**
Motor Orientation	**Horizontal**	Drive End Bearing	**Ball**
Opp Drive End Bearing	**Ball**	Frame Material	**Cast Iron**
Shaft Type	**TS**	Overall Length	**28.87 in**
Frame Length	**13.0 in**	Shaft Diameter	**1 7/8 in**
Shaft Extension	**4 in**	Assembly/Box Mounting	**F1 Only**

Drawings

Connection Drawing	**A-EE7308T**	Outline Drawing	**B-SS28118-1300**

This is an uncontrolled document once printed or downloaded and is subject to change without notice. Date Created: 16/10/2026

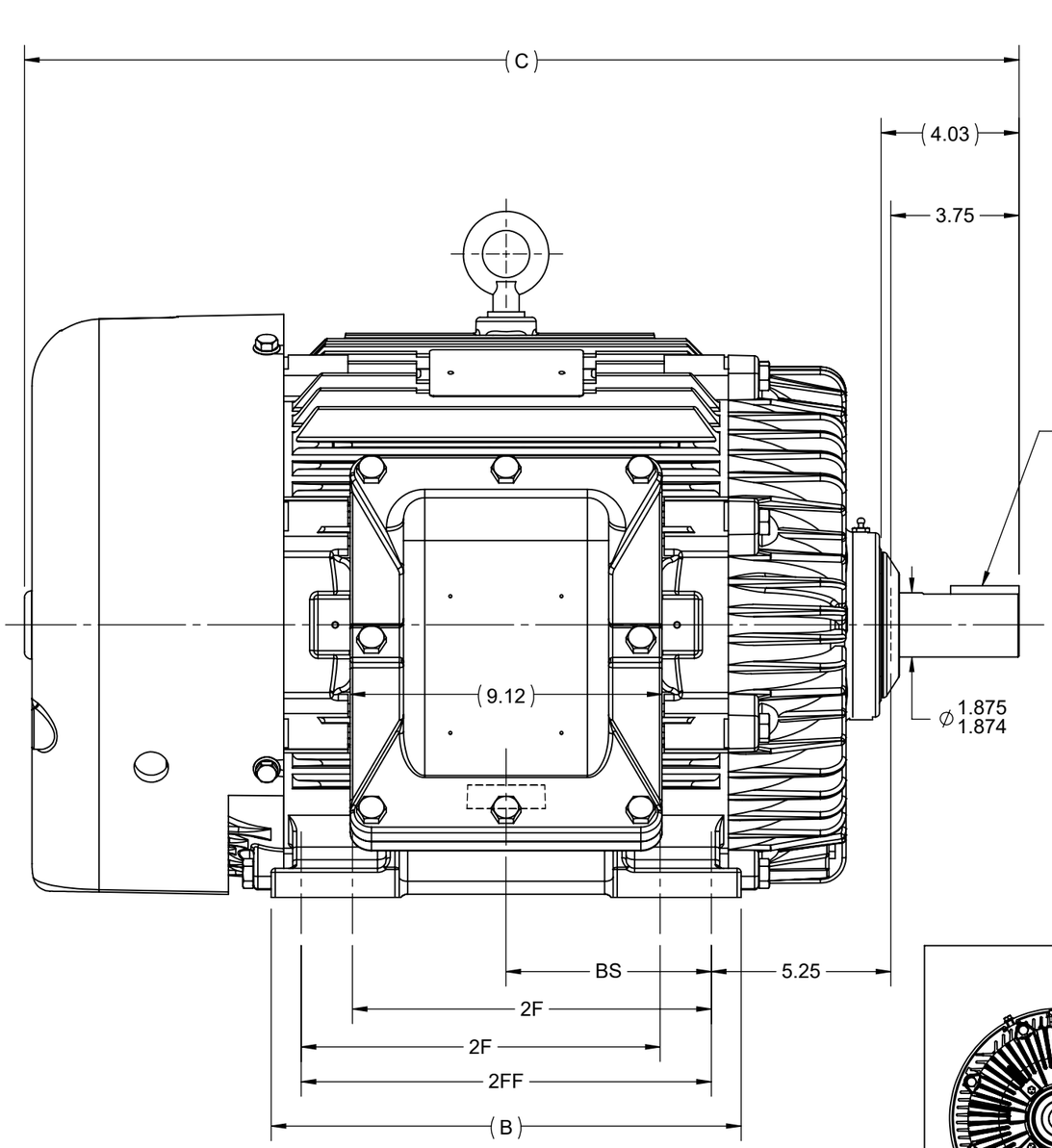

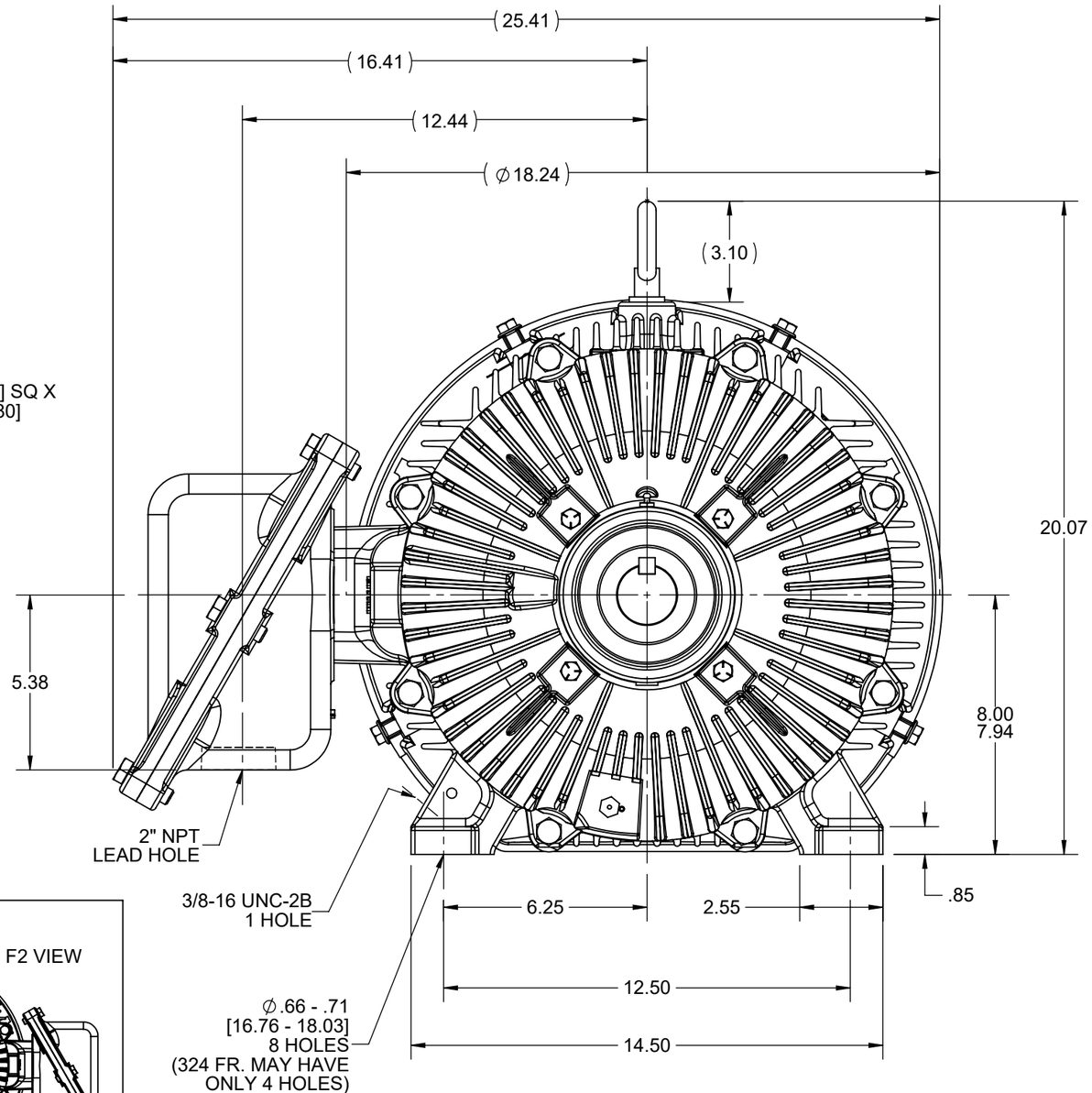

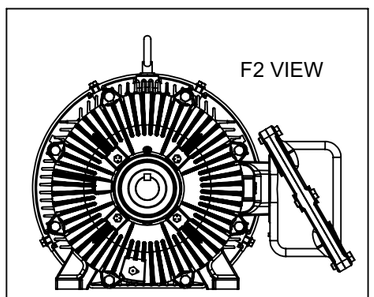

NOTES:
1. CONDUIT BOX CAN BE ROTATED IN 90° STEPS.
2. NAMEPLATE TO BE READ FROM CONDUIT BOX SIDE OF MOTOR.

DASH	FRAME	C	B	2F	2FF	BS
1150	324TS	27.60 [701.04]	13.00 [330.20]	- - -	10.50 [266.70]	5.25 [133.35]
1300	324/326TS	29.10 [739.06]	14.50 [368.30	10.50 [266.70]	12.00 304.80]	6.00 152.40]
1450	326TS	30.60 [777.25]	15.00 [381.00]	12.00 304.80]	13.50 [342.90]	6.75 [171.45]

DRAWING REVISION	REVISION BY	REV DATE/© DATE
M	SB	08/12/2025
REQUEST NUMBER	APPROVED BY	DATE
CR-0023600	SBD	08/12/2025

REQUEST NUMBER DESCRIPTION
DRAWING TITLE BLOCK UPDATED

COPYRIGHT (PER REVISION DATE) MARATHON ELECTRIC, LLC. ALL RIGHTS RESERVED. PROPRIETARY AND CONFIDENTIAL INFORMATION - THIS DOCUMENT IS THE PROPERTY OF MARATHON ELECTRIC, LLC. ("OWNER") AND CONTAINS OWNER'S PROPRIETARY INFORMATION. ANY PERSON, CORPORATION OR OTHER FIRM RECEIVING IT IS DEEMED, BY RECEIVING IT, TO AGREE THAT IT, AND/OR ANY PART OF IT, SHALL NOT BE DISCLOSED TO ANY PERSON, CORPORATION OR OTHER ENTITY, DUPLICATED, AND/OR USED, EXCEPT AS EXPRESSLY APPROVED IN WRITING IN ADVANCE BY OWNER. THIS DOCUMENT SHALL BE RETURNED TO OWNER UPON REQUEST. IT MAY BE SUBJECT TO CERTAIN RESTRICTIONS UNDER APPLICABLE EXPORT CONTROL LAWS AND REGULATIONS.

TOLERANCES (EXCEPT AS NOTED):

DEC.	INCH	mm	ANGLE
.X	±0.1	[±3]	±7' 30"
.XX	±0.03	[±0.8]	
.XXX	±0.005	[±0.13]	
.XXXX	±0.0005	[±0.013]	

REMOVE BURRS & BREAK SHARP EDGES: .003/.015 [.08/.38] X 45°
CORNER FILLETS: R.02 [.5]
MACHINED SURFACES: 200 / 5.1 / INCH / mm
mm DIMENSIONS IN [BRACKETS] ARE FOR REFERENCE ONLY

DRAWN BY	MRB
DATE	09-06-1995
APPROVED BY	GK
DATE	09-06-1995
REFERENCE	

marathon™

DESCRIPTION
OUTLINE
320TS FR. - EPFC - BB

MATERIAL | PROCESS/FINISH

THIRD ANGLE PROJECTION

SIZE	DRAWING NUMBER	SHEET
B	SS28118	1 OF 1

HIGH VOLTAGE

(U1) T1 — L1
(V1) T2 — L2
(W1) T3 — L3
(U2) T4
(U3) T7
(V2) T5
(V3) T8
(W2) T6
(W3) T9

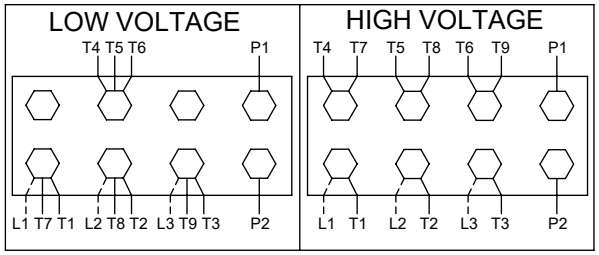

THREE PHASE
DUAL VOLTAGE MOTOR

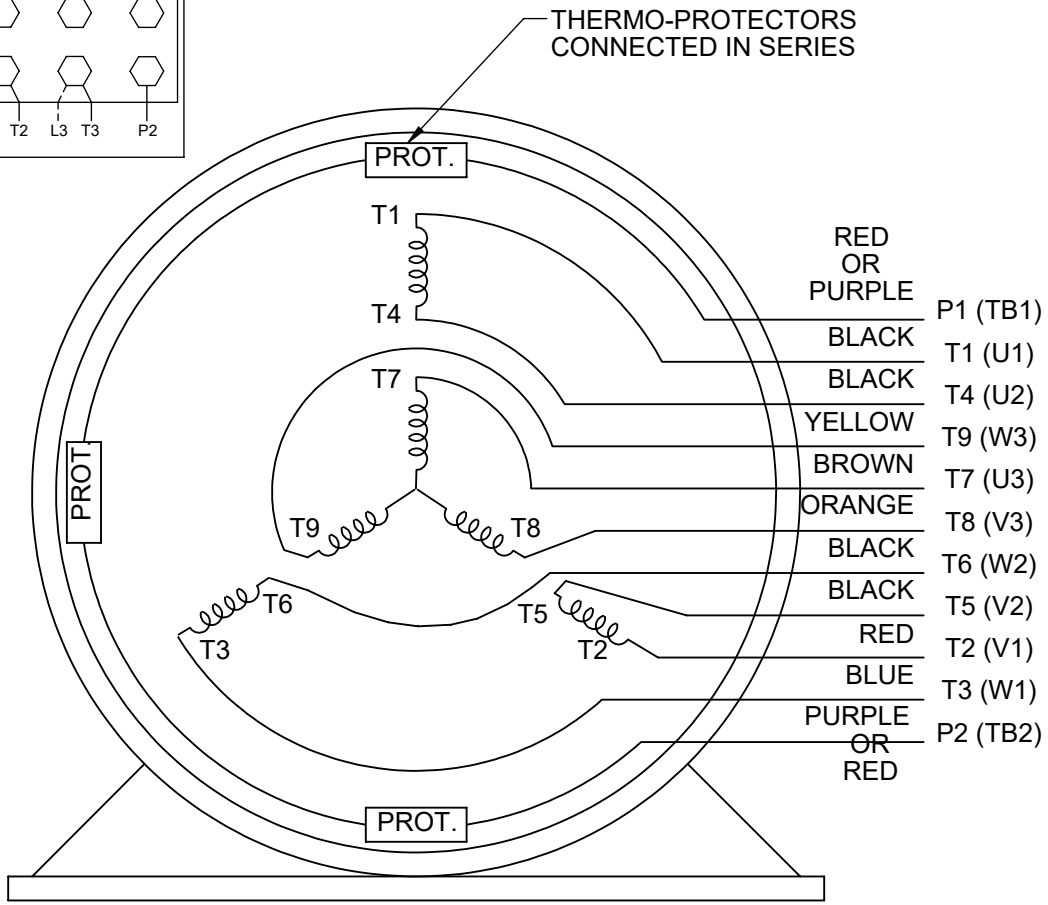

VIEW OF TERMINAL END

NOTE FOR FACTORY USE ONLY:
TO SURGE TEST FOR COMMON CONNECT:
HIGH VOLT: CONNECT P1 TO T1
THEN P2 TO L1
LOW VOLT: CONNECT P1 TO T1 & T7,
THEN P2 TO L1

LOW VOLTAGE

(U1) T1 — L1
(U3) T7 — L1
(V1) T2 — L2
(V3) T8 — L2
(W1) T3 — L3
(W3) T9 — L3
(U2) T4
(V2) T5
(W2) T6

NOTE: LEAD'S COLOR CAN BE YELLOW OR WHITE FOR IMG PLANT

DRAWING REVISION: U	REVISION BY: SB	REV DATE/© DATE: 08/01/2025	PRIMARY DIMENSIONS ARE INCH mm DIMENSIONS IN [BRACKETS] ARE FOR REFERENCE ONLY	DRAWN BY: SMC	marathon™
REQUEST NUMBER: CR-0023654	APPROVED BY: SBD	DATE: 08/01/2025		DATE: 05-13-1992	
REQUEST NUMBER DESCRIPTION: DRAWING TITLE BLOCK UPDATED				APPROVED BY: TB	DESCRIPTION: CONN DIAGRAM-EXTERNAL
				DATE: 05-13-1992	3 PHASE - DUAL VOLTAGE MOTOR
				REFERENCE: EE7308/EE7300	MATERIAL / PROCESS/FINISH
				THIRD ANGLE PROJECTION	SIZE: A — DRAWING NUMBER: EE7308T — SHEET: 1 OF 1

COPYRIGHT (PER REVISION DATE) MARATHON ELECTRIC, LLC. ALL RIGHTS RESERVED. PROPRIETARY AND CONFIDENTIAL INFORMATION - THIS DOCUMENT IS THE PROPERTY OF MARATHON ELECTRIC, LLC. ("OWNER") AND CONTAINS OWNER'S PROPRIETARY INFORMATION. ANY PERSON, CORPORATION OR OTHER FIRM RECEIVING IT IS DEEMED, BY RECEIVING IT, TO AGREE THAT IT, AND/OR ANY PART OF IT, SHALL NOT BE DISCLOSED TO ANY PERSON, CORPORATION OR OTHER ENTITY, DUPLICATED, AND/OR USED, EXCEPT AS EXPRESSLY APPROVED IN WRITING IN ADVANCE BY OWNER. THIS DOCUMENT SHALL BE RETURNED TO OWNER UPON REQUEST. IT MAY BE SUBJECT TO CERTAIN RESTRICTIONS UNDER APPLICABLE EXPORT CONTROL LAWS AND REGULATIONS.

Data Sheet

Date: 6/29/2017
Customer:
Attention:
Submitted by: FAREEDA DUDEKULA

marathon electric

326TSTGS16532

Submittal

Data @ 460 V

Motor Load Data

Load	0%	25%	50%	75%	100%	115%	125%	LR	
Current (Amps)	24.0	27.5	36.0	47.0	60.0	68.5	75.0	335	
Torque (ft-lb)	0.00	36.6	73.5	111	148	170	185	250	
RPM	1800	1795	1788	1782	1775	1,772	1770	0	
Efficiency (%)		91.7	94.5	94.5	94.5	94.1	93.6		
P.F. (%)	4.0	51.0	71.0	79.0	82.0	82.5	83.0	33.0	

Motor Speed Data

	LR	Pull-Up	BD	Rated	Idle
Speed (RPM)	0	900	1675	1775	1800
Current (Amps)	335	300	190	60.0	24.0
Torque (ft-lb)	250	230	340	148	0.00

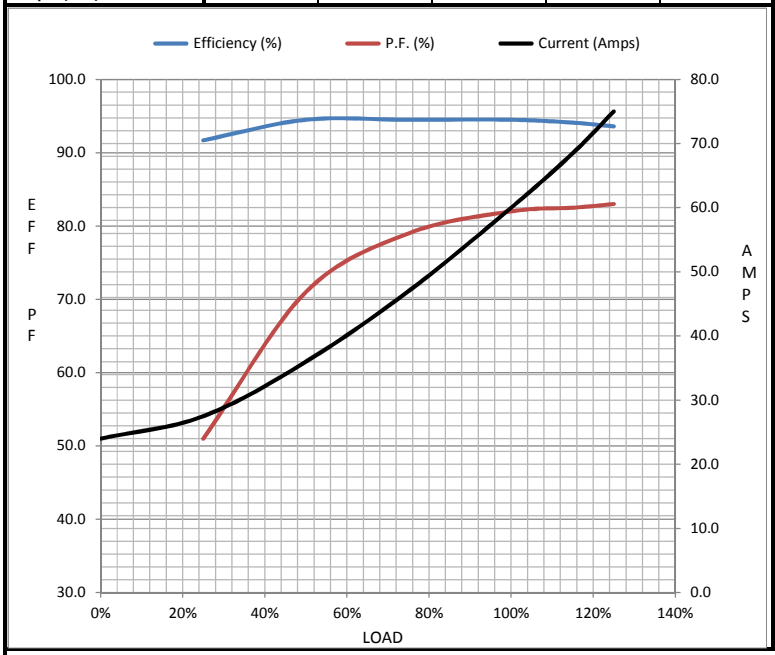

Information Block

HP	50.0
Sync. RPM	1800
Frame	326
Enclosure	TEFC
Construction	TFN
Voltage	230/460#190/380 V
Frequency	60 Hz
Design	B
LR Code letter	F
Service Factor	1.15
Temp Rise @ FL	75 ° C
Duty	CONT
Ambient	40 ° C
Elevation	1,000 feet
Rotor/Shaft wk²	9.7 Lb-Ft²
Ref Wdg	K3264168 NONE
Sound Pressure @ 1M	65 dBA
VFD Rating	CONSTANT 2:1
Outline Dwg	B-SS28118-1300
Conn. Diag	A-EE7308T
Additional Specifications:	
0	
0	

EQUIV CKT (OHMS / PHASE)

R1	R2	X1	X2	Xm
0.0680	0.0620	0.4830	0.6480	11.0680

Speed -Torque Curve

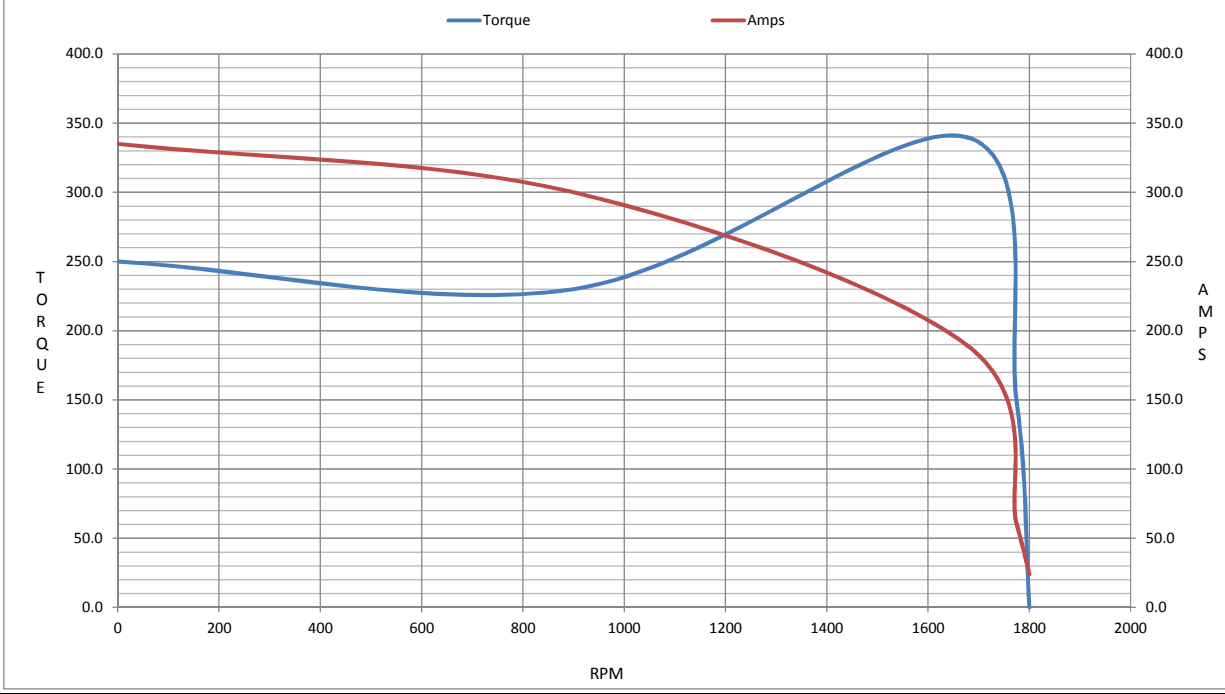

Uncontrolled Copy

CERTIFICATION DATA SHEET

Model#:	326TSTGS16532 AN	**WINDING#:**	K3264168 NONE 1
CONN. DIAGRAM:	A-EE7308T	**ASSEMBLY:**	F1 ONLY
OUTLINE:	B-SS28118-1300		

TYPICAL MOTOR PERFORMANCE DATA

HP	KW	SYNC. RPM	F.L. RPM	FRAME	ENCLOSURE	KVA CODE	DESIGN
50&40	37&30	1800	1775&1475	326TS	EPFC	F	B

PH	Hz	VOLTS	FL AMPS	START TYPE	DUTY	INSL	S.F	AMB°C	ELEVATION
3	60/50	230/460#190/380	120/60&118/59	LINE OR INVERTER	CONTINUOUS	F3	1.15/1.15	40	3300

FULL LOAD EFF: 94.5&94.1	3/4 LOAD EFF: 94.5	1/2 LOAD EFF: 94.5	GTD. EFF	ELEC. TYPE	NO LOAD AMPS
FULL LOAD PF: 82&82	3/4 LOAD PF: 79	1/2 LOAD PF: 71	94.1	SQ CAGE INV RATED	48 / 24

F.L. TORQUE	LOCKED ROTOR AMPS	L.R. TORQUE	B.D. TORQUE	F.L. RISE°C
148 LB-FT	670 / 335	250 LB-FT 169	340 LB-FT 230	75

SOUND PRESSURE @ 3 FT.	SOUND POWER	ROTOR WK^2	MAX. WK^2	SAFE STALL TIME	STARTS /HOUR	APPROX. MOTOR WGT
65 dBA	75 dBA	9.7 LB-FT^2	325 LB-FT^2	25 SEC.	2	775 LBS.

*** SUPPLEMENTAL INFORMATION ***

DE BRACKET TYPE	ODE BRACKET TYPE	MOUNT TYPE	ORIENTATION	SEVERE DUTY	HAZARDOUS LOCATION	DRIP COVER	SCREENS	PAINT
STANDARD	STANDARD	RIGID	HORIZONTAL	PREMIUM SEVERE DUTY	EXP PROOF CL I GR C&D CL II GR F&G T3B	FALSE	NONE	BLUE (EPOXY)

BEARINGS		GREASE	SHAFT TYPE	SPECIAL DE	SPECIAL ODE	SHAFT MATERIAL	FRAME MATERIAL
DE	OPE						
BALL 6312	BALL 6311	POLYREX EM	TS	NONE	NONE	1045 HOT ROLLED (C-204)	CAST IRON

THERMO-PROTECTORS				THERMISTORS	CONTROL	SPACE /n HEATERS
THERMOSTATS	PROTECTORS	WDG RTDs	BRG RTDs			
TSTATS (N/C)	NOT	NONE	NONE	NONE	FALSE	NONE VOLTS

If Inverter equals NONE, contact factory for further information

INVERTER TORQUE: CONSTANT 2:1
INV. HP SPEED RANGE: NONE

ENCODER: NONE
NONE NONE
NONE NONE PPR

BRAKE: NONE NONE
NONE P/N NONE
NONE NONE
- FT-LB NONE V NONE Hz

*
N
O
T
E
S
*

DATE: 06/21/2017 06:38:19 AM
FORM 3531 REV.3 02/07/99
** Subject to change without notice.