marathon®

Fire Pump Motors

Model No: 326TSTDCD4024
Catalog No: U516A

Fire Pump Motor, 60 & 50 HP, 3 Ph, 60 & 50 Hz, 230/460 & 190/380 V, 3600 RPM, 326TS Frame, DP

©2026 Marathon, All Rights Reserved.

marathon®

Product Information Packet: Model No: 326TSTDCD4024, Catalog No: U516A Fire Pump Motor, 60 & 50 HP, 3 Ph, 60 & 50 Hz, 230/460 & 190/380 V, 3600 RPM, 326TS Frame, DP

Nameplate Specifications

Phase	**3**	Output HP	**60 & 50 Hp**
Output KW	**45.0 & 37.0 kW**	Voltage	**230/460 & 190/380 V**
Speed	**3565 & 2962 r/min**	Synchronous RPM	**3600 & 3000 r/min**
Service Factor	**1.15 & 1.15**	Frame	**326TS**
Enclosure	**Drip Proof**	Thermal Protection	**No Protection**
Efficiency	**93 & 92.4 %**	Ambient Temperature	**50 °C**
Frequency	**60 & 50 Hz**	Current	**136/68 & 138/69 A**
Power Factor	**88**	Duty	**Continuous**
Insulation Class	**F**	Design Code	**B**
KVA Code	**F**	Drive End Bearing Size	**6212**
Opp Drive End Bearing Size	**6212**	UL	**Listed**
CSA	**Y**	CE	**Y**
IP Code	**23**	Number of Speeds	**1**

Technical Specifications

Electrical Type	**Squirrel Cage Induction Run**	Starting Method	**Part Wdg Start Low Volt Only & Wye Start Delta Run**
Poles	**2**	Rotation	**Reversible**
Resistance Main	**.138 O**	Mounting	**Rigid Base**
Motor Orientation	**Horizontal**	Drive End Bearing	**Ball**
Opp Drive End Bearing	**Ball**	Frame Material	**Cast Iron**
Shaft Type	**TS**	Overall Length	**28.23 in**
Frame Length	**15.74 in**	Shaft Diameter	**1 7/8 in**
Shaft Extension	**3.75 in**	Assembly/Box Mounting	**F1/F2 Capable**

Drawings

Connection Drawing	**EE7308AA**	Outline Drawing	**SS620243**

This is an uncontrolled document once printed or downloaded and is subject to change without notice. Date Created: 02/11/2026

Uncontrolled Copy

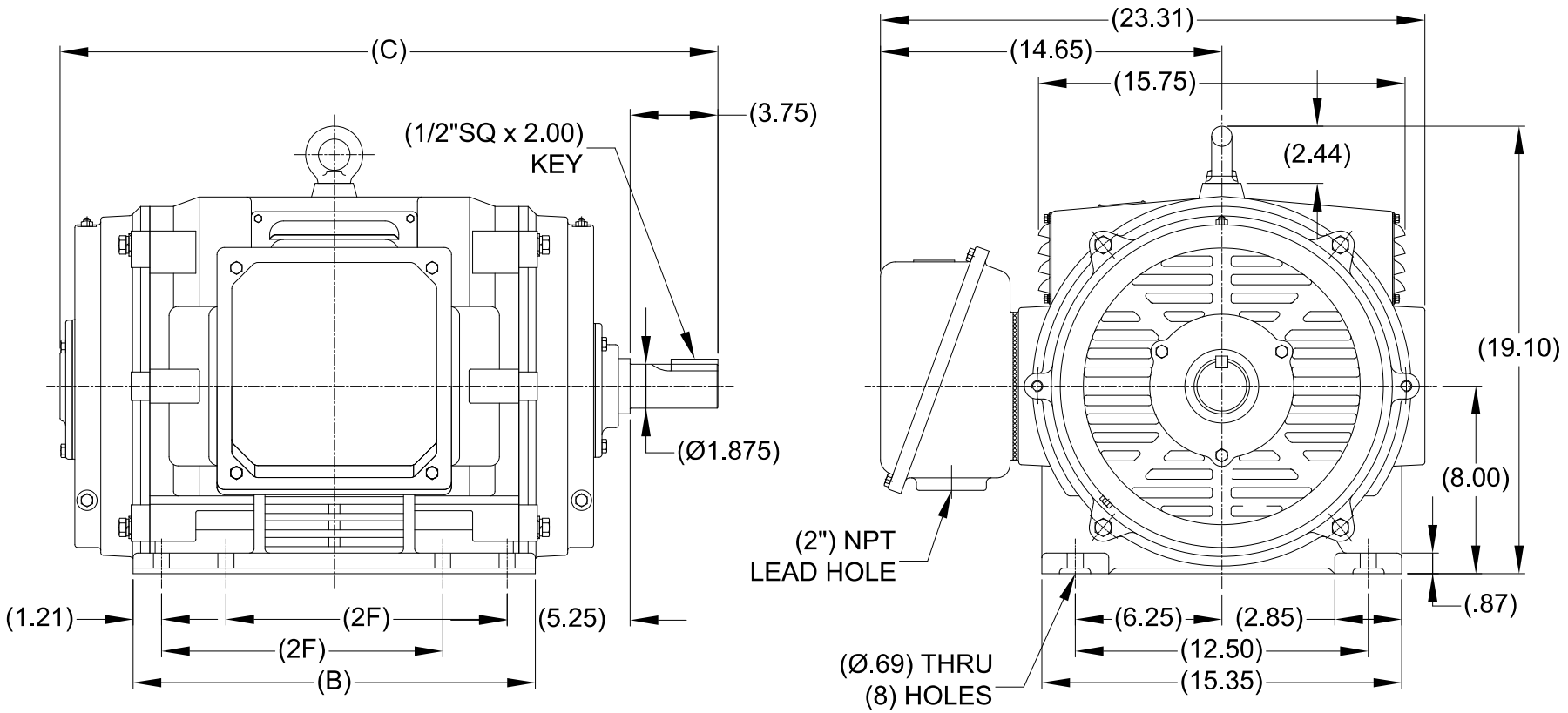

(DIMENSIONS IN TABLE ARE CONSIDERED REFFERENCE)

(MAY NOT BE DRAWN TO SCALE)

324TS	27.05	15.99	10.50
326TS	28.23	17.17	12.00
FRAME	C	B	2F

DRAWING REVISION: D	REVISION BY: SB	REV DATE/ © DATE: 05/20/2026
REQUEST NUMBER: CR-0026330	APPROVED BY: RMS	DATE: 05/20/2026
REQUEST NUMBER DESCRIPTION: DRAWING TITLE BLOCK UPDATED		

COPYRIGHT (PER REVISION DATE) MARATHON ELECTRIC, LLC. ALL RIGHTS RESERVED. PROPRIETARY AND CONFIDENTIAL INFORMATION - THIS DOCUMENT IS THE PROPERTY OF MARATHON ELECTRIC, LLC. ("OWNER") AND CONTAINS OWNER'S PROPRIETARY INFORMATION. ANY PERSON, CORPORATION OR OTHER FIRM RECEIVING IT IS DEEMED, BY RECEIVING IT, TO AGREE THAT IT, AND/OR ANY PART OF IT, SHALL NOT BE DISCLOSED TO ANY PERSON, CORPORATION OR OTHER ENTITY, DUPLICATED, AND/OR USED, EXCEPT AS EXPRESSLY APPROVED IN WRITING IN ADVANCE BY OWNER. THIS DOCUMENT SHALL BE RETURNED TO OWNER UPON REQUEST. IT MAY BE SUBJECT TO CERTAIN RESTRICTIONS UNDER APPLICABLE EXPORT CONTROL LAWS AND REGULATIONS.

TOLERANCES (EXCEPT AS NOTED):

DEC.	INCH	mm	ANGLE
.X	±0.1	[±3]	±7' 30"
.XX	±0.03	[±0.8]	
.XXX	±0.005	[±0.13]	
.XXXX	±0.0005	[±0.013]	

REMOVE BURRS & BREAK SHARP EDGES: .003/.015 [.08/.38] X 45 °
CORNER FILLETS: R.02 [.5]
MACHINED SURFACES: 200/ INCH 5.1/ mm
mm DIMENSIONS IN [BRACKETS] ARE FOR REFERENCE ONLY

DRAWN BY: MSG	
DATE: 01/12/2010	
APPROVED BY: SB	
DATE: 01/13/2010	
REFERENCE	
THIRD ANGLE PROJECTION	

marathon™

DESCRIPTION: OUTLINE
320TS FR. - ODP

MATERIAL | PROCESS/FINISH

SIZE: B | DRAWING NUMBER: SS620243 | SHEET: 1 OF 1

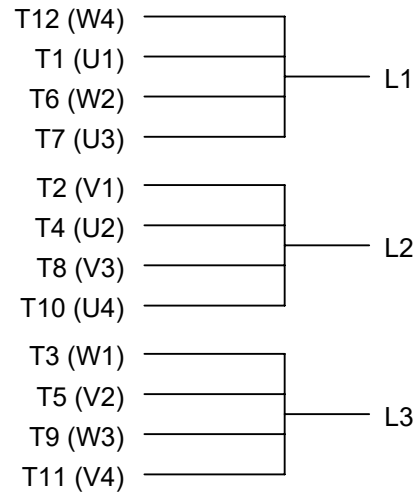

LOW VOLTAGE

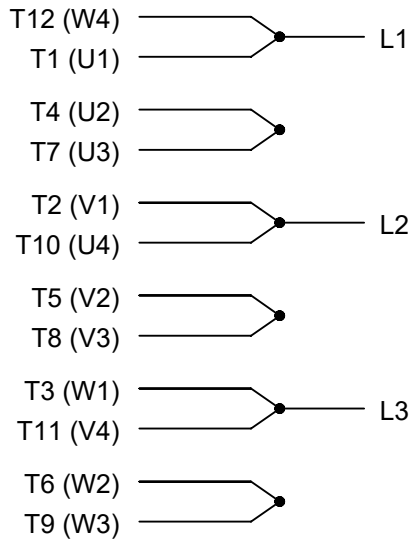

HIGH VOLTAGE

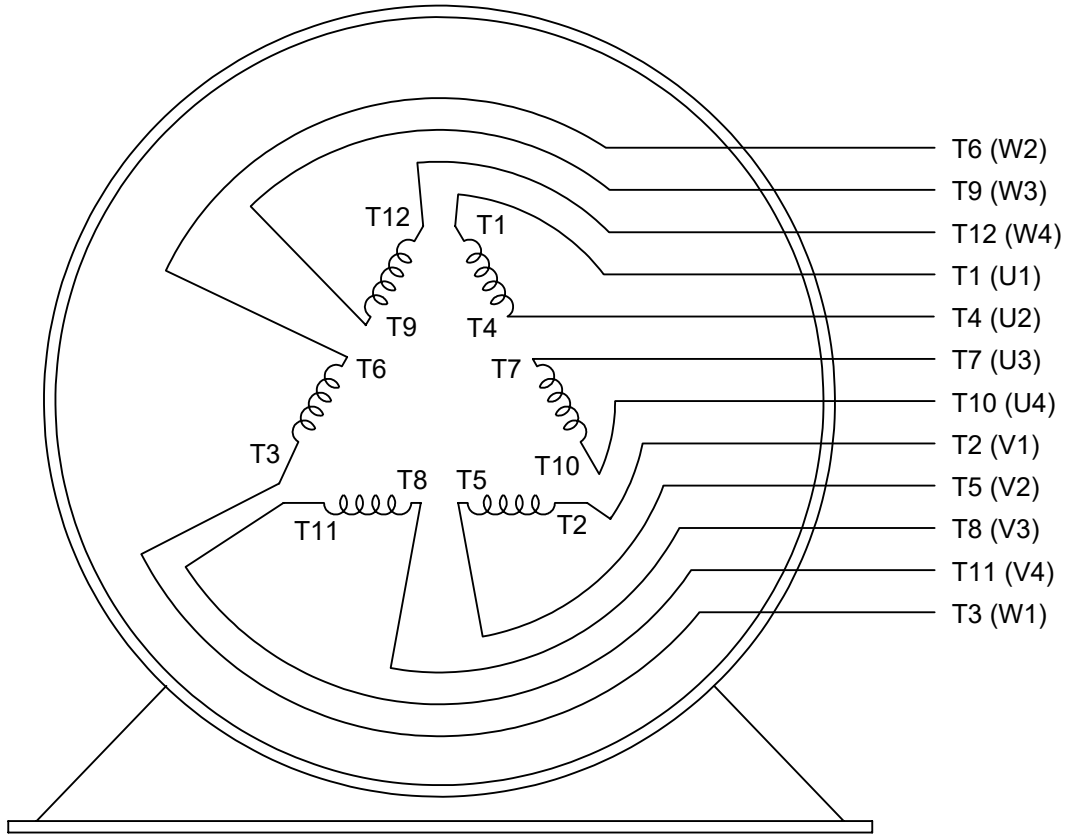

VIEW OF TERMINAL END

DRAWING REVISION: L	REVISION BY: SB	REV DATE/© DATE: 08/01/2025	PRIMARY DIMENSIONS ARE INCH mm DIMENSIONS IN [BRACKETS] ARE FOR REFERENCE ONLY	DRAWN BY: LZ	marathon™
REQUEST NUMBER: CR-0023654	APPROVED BY: SBD	DATE: 08/01/2025		DATE: 01-12-1994	
REQUEST NUMBER DESCRIPTION: DRAWING TITLE BLOCK UPDATED				APPROVED BY: GK	DESCRIPTION: CONN DIAGRAM-EXTERNAL 3Ø-2/1 DELTA-12 LEADS
				DATE: 01-14-1994	
				REFERENCE	MATERIAL / PROCESS/FINISH
				THIRD ANGLE PROJECTION	SIZE: A / DRAWING NUMBER: EE7308AA / SHEET: 1 OF 1

COPYRIGHT (PER REVISION DATE) MARATHON ELECTRIC, LLC. ALL RIGHTS RESERVED. PROPRIETARY AND CONFIDENTIAL INFORMATION - THIS DOCUMENT IS THE PROPERTY OF MARATHON ELECTRIC, LLC. ("OWNER") AND CONTAINS OWNER'S PROPRIETARY INFORMATION. ANY PERSON, CORPORATION OR OTHER FIRM RECEIVING IT IS DEEMED, BY RECEIVING IT, TO AGREE THAT IT, AND/OR ANY PART OF IT, SHALL NOT BE DISCLOSED TO ANY PERSON, CORPORATION OR OTHER ENTITY, DUPLICATED, AND/OR USED, EXCEPT AS EXPRESSLY APPROVED IN WRITING IN ADVANCE BY OWNER. THIS DOCUMENT SHALL BE RETURNED TO OWNER UPON REQUEST. IT MAY BE SUBJECT TO CERTAIN RESTRICTIONS UNDER APPLICABLE EXPORT CONTROL LAWS AND REGULATIONS.

Uncontrolled Copy

Data Sheet

Date: 12/13/2018
Customer:
Attention:
Submitted by: FAREEDA DUDEKULA

marathon® electric

326TSTDCD4024

Submittal

Data @ 460 V

Motor Load Data

Load	0%	25%	50%	75%	100%	115%	125%	LR	
Current (Amps)	16.5	23.5	36.5	51.0	68.0	78.0	86.0	385	
Torque (ft-lb)	0.00	22.0	44.0	66.0	88.5	102	111	132	
RPM	3600	3590	3582	3575	3565	3,558	3552	0	
Efficiency (%)		89.5	92.4	93.0	93.0	92.4	91.7		
P.F. (%)	8.5	68.0	83.0	88.0	89.0	89.0	89.0	33.0	

Motor Speed Data

	LR	Pull-Up	BD	Rated	Idle
Speed (RPM)	0	1800	3450	3565	3600
Current (Amps)	385	325	225	68.0	16.5
Torque (ft-lb)	132	90.0	190	88.5	0.00

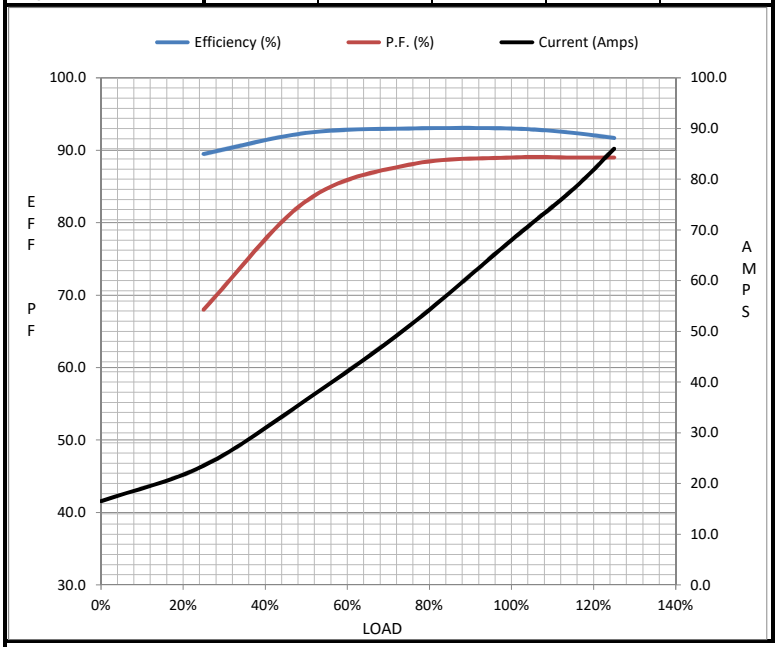

Information Block

HP	60.0
Sync. RPM	3600
Frame	326
Enclosure	DP
Construction	TDC
Voltage	230/460#190/380 V
Frequency	60 Hz
Design	B
LR Code letter	F
Service Factor	1.15
Temp Rise @ FL	45 ° C
Duty	CONT
Ambient	40 ° C
Elevation	1,000 feet
Rotor/Shaft wk²	0.00 Lb-Ft²
Ref Wdg	IE3L2002111 NONE
Sound Pressure @ 1M	999 dBA
VFD Rating	NONE
Outline Dwg	SS620744
Conn. Diag	EE7308AA
Additional Specifications:	
0	
0	

EQUIV CKT (OHMS / PHASE)

R1	R2	X1	X2	Xm
0.0830	0.0400	0.3740	0.4970	16.0910

Speed -Torque Curve

