marathon®

Fire Pump Motors

Model No: 326TSTDCD4022
Catalog No: U517A

Fire Pump Motor, 60 HP, 3 Ph, 60 Hz, 190/380-400 V, 3600 RPM, 326TS Frame, DP

©2026 Marathon, All Rights Reserved.

marathon®

Product Information Packet: Model No: 326TSTDCD4022, Catalog No: U517A Fire Pump Motor, 60 HP, 3 Ph, 60 Hz, 190/380-400 V, 3600 RPM, 326TS Frame, DP

Nameplate Specifications

Phase	**3**	Output HP	**60 Hp**
Output KW	**45.0 kW**	Voltage	**190/380-400 V**
Speed	**3565 r/min**	Synchronous RPM	**3600 r/min**
Service Factor	**1.15**	Frame	**326TS**
Enclosure	**Drip Proof**	Thermal Protection	**No Protection**
Efficiency	**93 %**	Ambient Temperature	**50 °C**
Frequency	**60 Hz**	Current	**165.0/82.5-77.5 A**
Power Factor	**88**	Duty	**Continuous**
Insulation Class	**F**	Design Code	**B**
KVA Code	**F**	Drive End Bearing Size	**6212**
Opp Drive End Bearing Size	**6212**	UL	**Listed**
CSA	**Y**	CE	**Y**
IP Code	**23**	Number of Speeds	**1**

Technical Specifications

Electrical Type	**Squirrel Cage Induction Run**	Starting Method	**Part Wdg Start & Wye Start Delta Run**
Poles	**2**	Rotation	**Reversible**
Resistance Main	**.138 O**	Mounting	**Rigid Base**
Motor Orientation	**Horizontal**	Drive End Bearing	**Ball**
Opp Drive End Bearing	**Ball**	Frame Material	**Cast Iron**
Shaft Type	**TS**	Overall Length	**28.23 in**
Frame Length	**15.74 in**	Shaft Diameter	**1 7/8 in**
Shaft Extension	**3.75 in**	Assembly/Box Mounting	**F1/F2 Capable**

Drawings

Connection Drawing	**EE7308AA**	Outline Drawing	**0232400025-326TS**

This is an uncontrolled document once printed or downloaded and is subject to change without notice. Date Created: 15/10/2026

Uncontrolled Copy

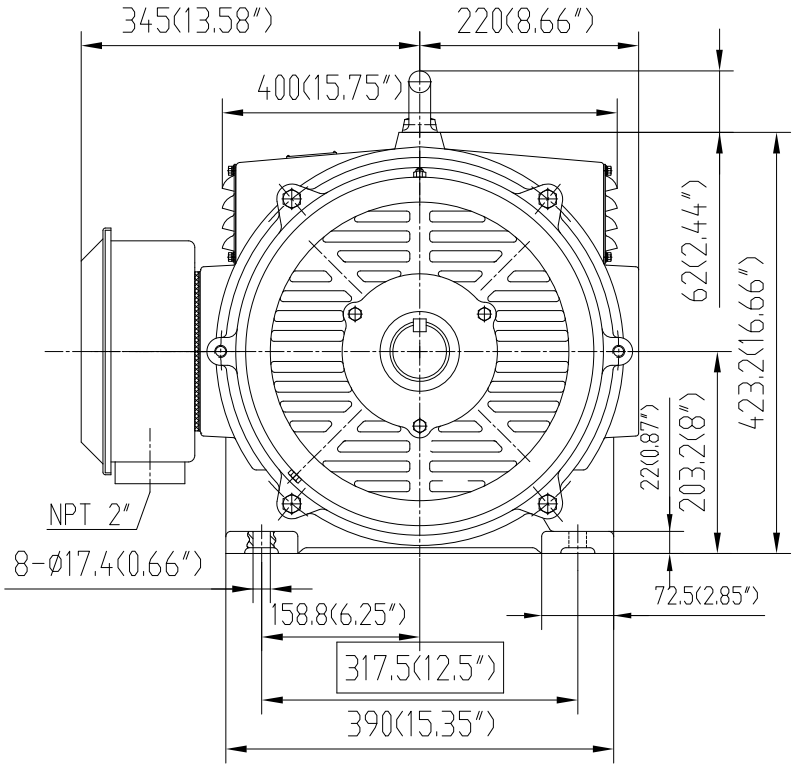

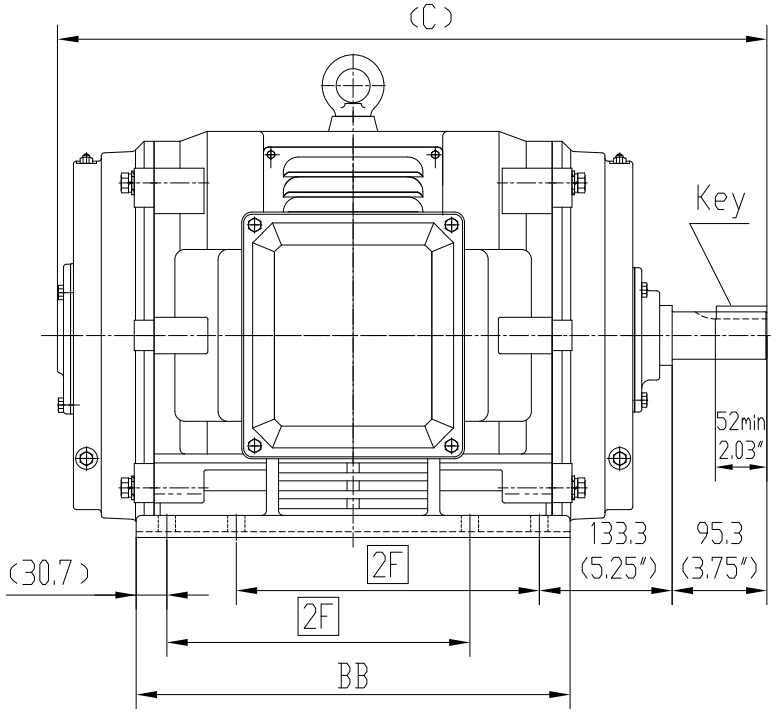

Frame Size	U	R	S	Key	2F	BB	C
324TS	Ø47.6(Ø1.875")	40.4(1.591")	12.7(0.5")	12.7X12.7X50.8 ($\frac{1}{2}$"X $\frac{1}{2}$"X 2")	266.7(10.5")	406(15.99")	687(27.05")
326TS					304.8(12")	436(17.17")	717(28.23")

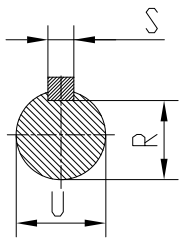

DRAWING REVISION B	REVISION BY SV	REV DATE/ © DATE 05/21/2026
REQUEST NUMBER CR-0026353	APPROVED BY RMS	DATE 05/21/2026
REQUEST NUMBER DESCRIPTION DRAWING TITLE BLOCK UPDATED		

COPYRIGHT (PER REVISION DATE) MARATHON ELECTRIC, LLC. ALL RIGHTS RESERVED. PROPRIETARY AND CONFIDENTIAL INFORMATION - THIS DOCUMENT IS THE PROPERTY OF MARATHON ELECTRIC, LLC. ("OWNER") AND CONTAINS OWNER'S PROPRIETARY INFORMATION. ANY PERSON, CORPORATION OR OTHER FIRM RECEIVING IT IS DEEMED, BY RECEIVING IT, TO AGREE THAT IT, AND/OR ANY PART OF IT, SHALL NOT BE DISCLOSED TO ANY PERSON, CORPORATION OR OTHER ENTITY, DUPLICATED, AND/OR USED, EXCEPT AS EXPRESSLY APPROVED IN WRITING IN ADVANCE BY OWNER. THIS DOCUMENT SHALL BE RETURNED TO OWNER UPON REQUEST. IT MAY BE SUBJECT TO CERTAIN RESTRICTIONS UNDER APPLICABLE EXPORT CONTROL LAWS AND REGULATIONS.

PRIMARY DIMENSIONS ARE INCH
mm DIMENSIONS IN [BRACKETS]
ARE FOR REFERENCE ONLY

DRAWN BY ZHU XIAOWEI	marathon™	
DATE 12/21/2016		
APPROVED BY ZOU YUNHAI	DESCRIPTION OUTLINE 320TS FR - DP FIRE PUMP	
DATE 12/21/2016		
REFERENCE	MATERIAL	PROCESS/FINISH
THIRD ANGLE PROJECTION	SIZE B / DRAWING NUMBER 0232400025	SHEET 1 OF 1

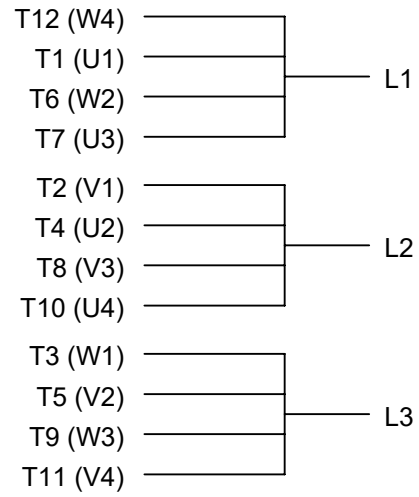

LOW VOLTAGE

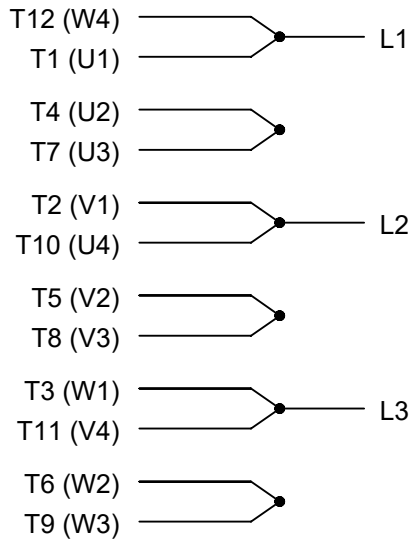

HIGH VOLTAGE

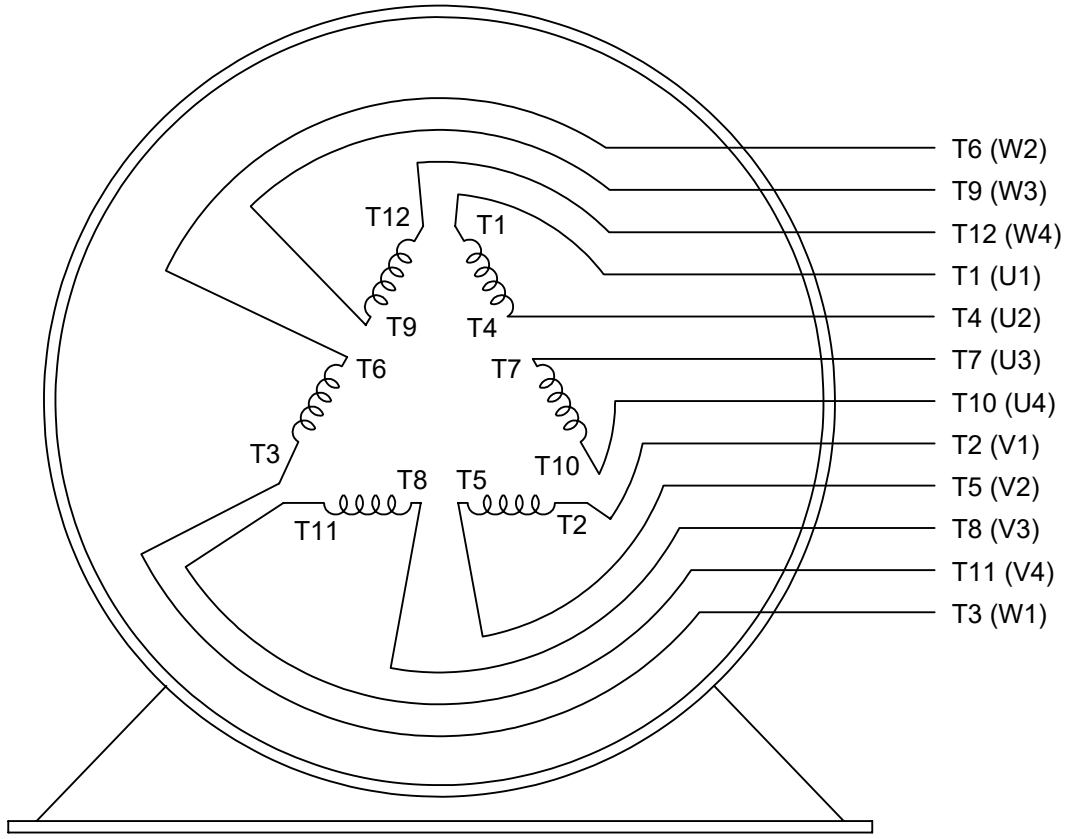

VIEW OF TERMINAL END

DRAWING REVISION: L	REVISION BY: SB	REV DATE/© DATE: 08/01/2025	PRIMARY DIMENSIONS ARE INCH mm DIMENSIONS IN [BRACKETS] ARE FOR REFERENCE ONLY	DRAWN BY: LZ	marathon™
REQUEST NUMBER: CR-0023654	APPROVED BY: SBD	DATE: 08/01/2025		DATE: 01-12-1994	
REQUEST NUMBER DESCRIPTION: DRAWING TITLE BLOCK UPDATED				APPROVED BY: GK	DESCRIPTION: CONN DIAGRAM-EXTERNAL 3Ø-2/1 DELTA-12 LEADS
				DATE: 01-14-1994	
				REFERENCE	MATERIAL / PROCESS/FINISH
				THIRD ANGLE PROJECTION	SIZE: A / DRAWING NUMBER: EE7308AA / SHEET: 1 OF 1

COPYRIGHT (PER REVISION DATE) MARATHON ELECTRIC, LLC. ALL RIGHTS RESERVED. PROPRIETARY AND CONFIDENTIAL INFORMATION - THIS DOCUMENT IS THE PROPERTY OF MARATHON ELECTRIC, LLC. ("OWNER") AND CONTAINS OWNER'S PROPRIETARY INFORMATION. ANY PERSON, CORPORATION OR OTHER FIRM RECEIVING IT IS DEEMED, BY RECEIVING IT, TO AGREE THAT IT, AND/OR ANY PART OF IT, SHALL NOT BE DISCLOSED TO ANY PERSON, CORPORATION OR OTHER ENTITY, DUPLICATED, AND/OR USED, EXCEPT AS EXPRESSLY APPROVED IN WRITING IN ADVANCE BY OWNER. THIS DOCUMENT SHALL BE RETURNED TO OWNER UPON REQUEST. IT MAY BE SUBJECT TO CERTAIN RESTRICTIONS UNDER APPLICABLE EXPORT CONTROL LAWS AND REGULATIONS.

Uncontrolled Copy

Data Sheet

Date: 12/13/2018
Customer:
Attention:
Submitted by: FAREEDA DUDEKULA

marathon® electric

326TSTDCD4022

Submittal

Data @ 380 V

Motor Load Data

Load	0%	25%	50%	75%	100%	115%	125%	LR	
Current (Amps)	20.0	28.5	44.2	61.7	82.3	94.4	104	466	
Torque (ft-lb)	0.00	22.0	44.0	66.0	88.5	102	111	132	
RPM	3600	3590	3582	3575	3565	3,558	3552	0	
Efficiency (%)		89.5	92.4	93.0	93.0	92.4	91.7		
P.F. (%)	8.5	68.0	83.0	88.0	89.0	89.0	89.0	33.0	

Motor Speed Data

	LR	Pull-Up	BD	Rated	Idle
Speed (RPM)	0	1800	3450	3565	3600
Current (Amps)	466	393	272	82.3	20.0
Torque (ft-lb)	132	90.0	190	88.5	0.00

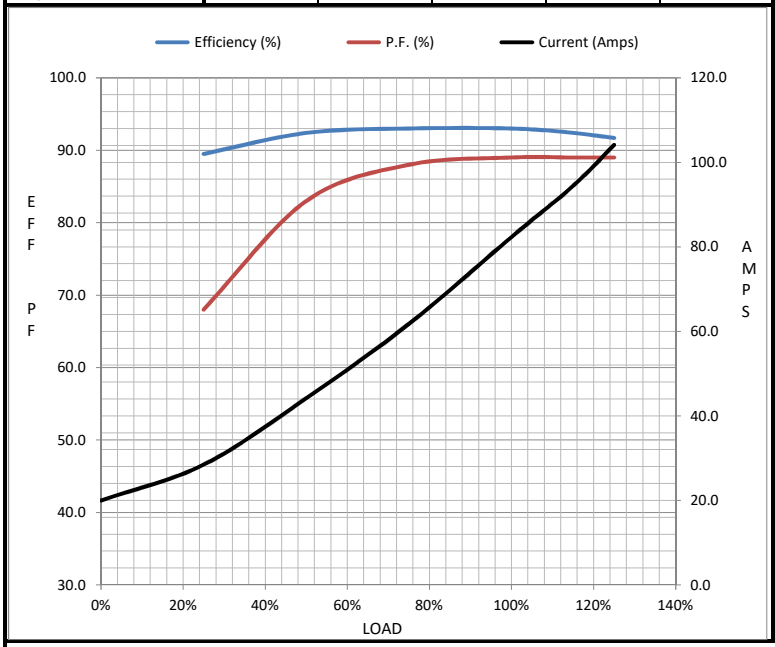

Information Block

HP	60.0	
Sync. RPM	3600	
Frame	326	
Enclosure	DP	
Construction	TDC	
Voltage	190/380	V
Frequency	60	Hz
Design	B	
LR Code letter	F	
Service Factor	1.15	
Temp Rise @ FL	45	° C
Duty	CONT	
Ambient	40	° C
Elevation	1,000	feet
Rotor/Shaft wk²	0.00	Lb-Ft²
Ref Wdg	IE3L2002111 NONE	
Sound Pressure @ 1M	999	dBA
VFD Rating	NONE	
Outline Dwg	SS620744	
Conn. Diag	EE7308AA	
Additional Specifications:		
0		
0		

EQUIV CKT (OHMS / PHASE)

R1	R2	X1	X2	Xm
0.0560	0.0270	0.2550	0.3390	10.9810

Speed -Torque Curve

