marathon®

Fire Pump Motors

Model No: 326TSTDCD4008
Catalog No: U1112

Fire Pump Motor, 60 HP, 3 Ph, 60 Hz, 575 V, 3600 RPM, 326TS Frame, DP

©2026 Marathon, All Rights Reserved.

marathon®

Product Information Packet: Model No: 326TSTDCD4008, Catalog No: U1112 Fire Pump Motor, 60 HP, 3 Ph, 60 Hz, 575 V, 3600 RPM, 326TS Frame, DP

Nameplate Specifications

Phase	**3**	Output HP	**60 Hp**
Output KW	**45.0 kW**	Voltage	**575 V**
Speed	**3565 r/min**	Synchronous RPM	**3600 r/min**
Service Factor	**1.15**	Frame	**326TS**
Enclosure	**Drip Proof**	Thermal Protection	**No Protection**
Efficiency	**93 %**	Ambient Temperature	**50 °C**
Frequency	**60 Hz**	Current	**54.5 A**
Power Factor	**88**	Duty	**Continuous**
Insulation Class	**F**	Design Code	**B**
KVA Code	**F**	Drive End Bearing Size	**6212**
Opp Drive End Bearing Size	**6212**	UL	**Listed**
CSA	**Y**	CE	**Y**
IP Code	**23**	Number of Speeds	**1**

Technical Specifications

Electrical Type	**Squirrel Cage Induction Run**	Starting Method	**Part Wdg Start & Wye Start Delta Run**
Poles	**2**	Rotation	**Reversible**
Resistance Main	**.138 O**	Mounting	**Rigid Base**
Motor Orientation	**Horizontal**	Drive End Bearing	**Ball**
Opp Drive End Bearing	**Ball**	Frame Material	**Cast Iron**
Shaft Type	**TS**	Overall Length	**28.23 in**
Frame Length	**15.74 in**	Shaft Diameter	**1 7/8 in**
Shaft Extension	**3.75 in**	Assembly/Box Mounting	**F1/F2 Capable**

Drawings

Connection Drawing	**EE7300BH**	Outline Drawing	**SS620744-326TS**

This is an uncontrolled document once printed or downloaded and is subject to change without notice. Date Created: 16/10/2026

DASH NO.	B	C	D	E	2E	2F	2FF	BA	BS	MOUNTING	FRAME
100	14.85	26.85	8.00	6.25	12.50	10.50	12.00	5.25	11.90	F1 OR F2	324TS
200		28.03							13.08		326TS

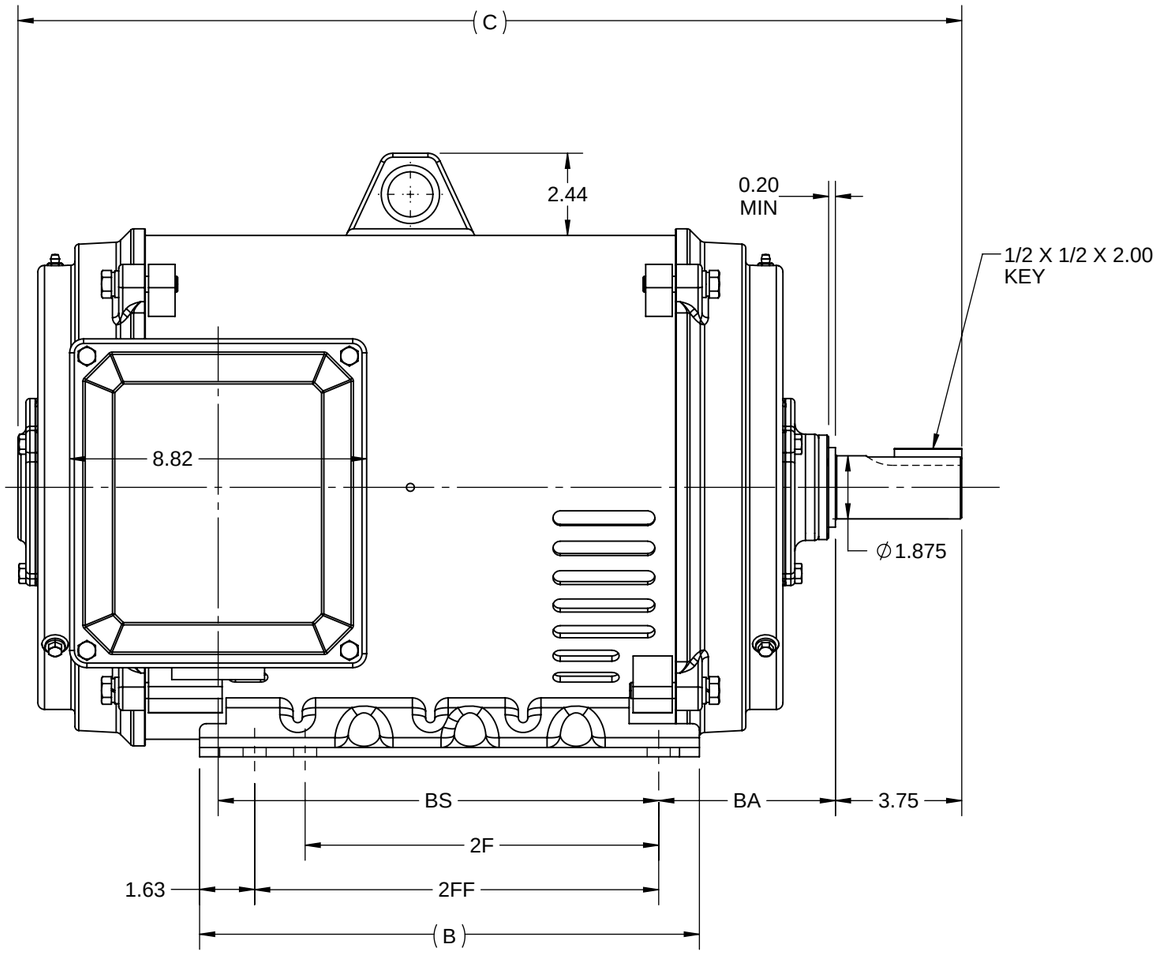

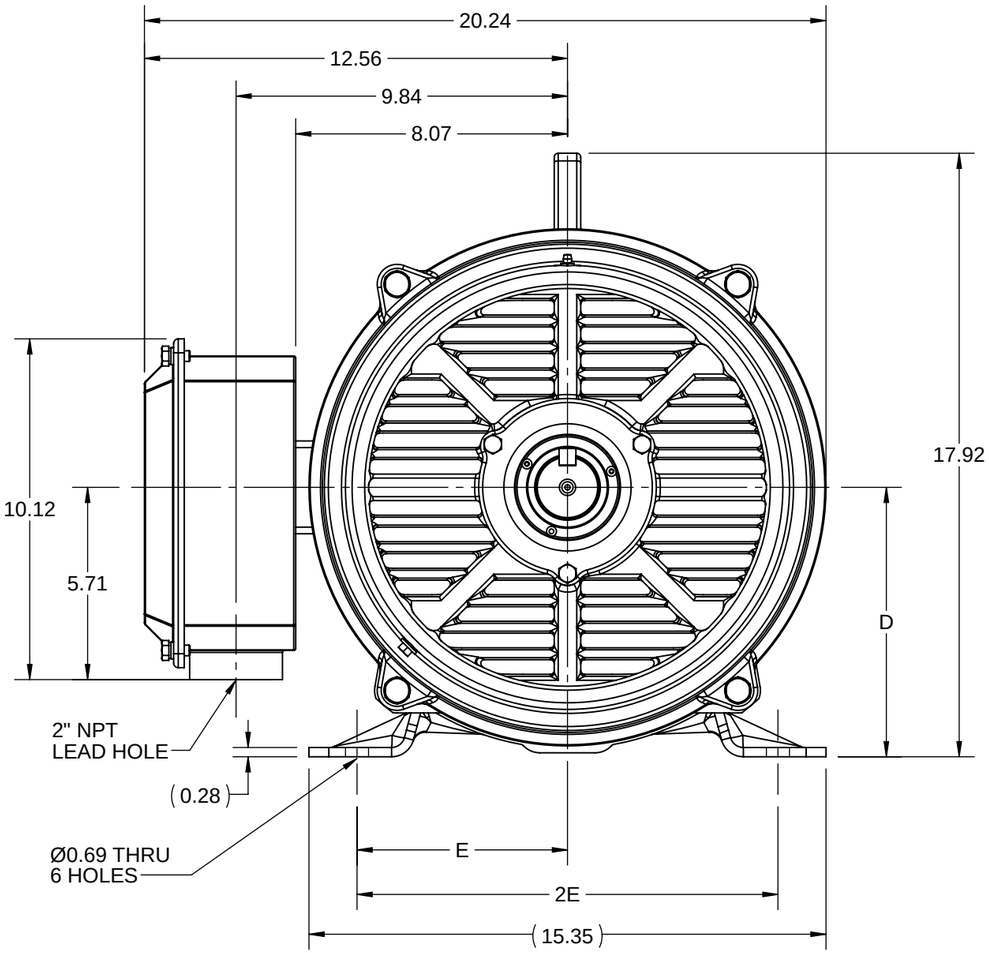

F2 VIEW

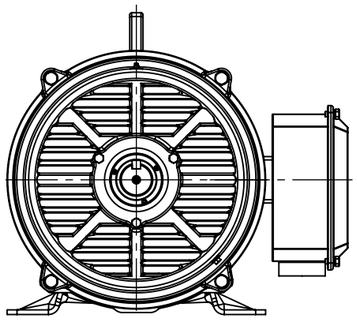

DRAWING REVISION	REVISION BY	REV DATE/© DATE
D	SV	05/22/2026
REQUEST NUMBER	APPROVED BY	DATE
CR-0026372	RMS	05/22/2026

REQUEST NUMBER DESCRIPTION
DRAWING TITLE BLOCK UPDATED

COPYRIGHT (PER REVISION DATE) MARATHON ELECTRIC, LLC. ALL RIGHTS RESERVED. PROPRIETARY AND CONFIDENTIAL INFORMATION - THIS DOCUMENT IS THE PROPERTY OF MARATHON ELECTRIC, LLC. ("OWNER") AND CONTAINS OWNER'S PROPRIETARY INFORMATION. ANY PERSON, CORPORATION OR OTHER FIRM RECEIVING IT IS DEEMED, BY RECEIVING IT, TO AGREE THAT IT, AND/OR ANY PART OF IT, SHALL NOT BE DISCLOSED TO ANY PERSON, CORPORATION OR OTHER ENTITY, DUPLICATED, AND/OR USED, EXCEPT AS EXPRESSLY APPROVED IN WRITING IN ADVANCE BY OWNER. THIS DOCUMENT SHALL BE RETURNED TO OWNER UPON REQUEST. IT MAY BE SUBJECT TO CERTAIN RESTRICTIONS UNDER APPLICABLE EXPORT CONTROL LAWS AND REGULATIONS.

PRIMARY DIMENSIONS ARE INCH
mm DIMENSIONS IN [BRACKETS]
ARE FOR REFERENCE ONLY

DRAWN BY	DESCRIPTION
XZ	OUTLINE
DATE: 25/02/2016	324/326TS FR NEMA ODP RS
APPROVED BY	
DATE	
REFERENCE	MATERIAL / PROCESS/FINISH
THIRD ANGLE PROJECTION	SIZE: B / DRAWING NUMBER: SS620744 / SHEET: 1 OF 1

marathon™

Uncontrolled Copy

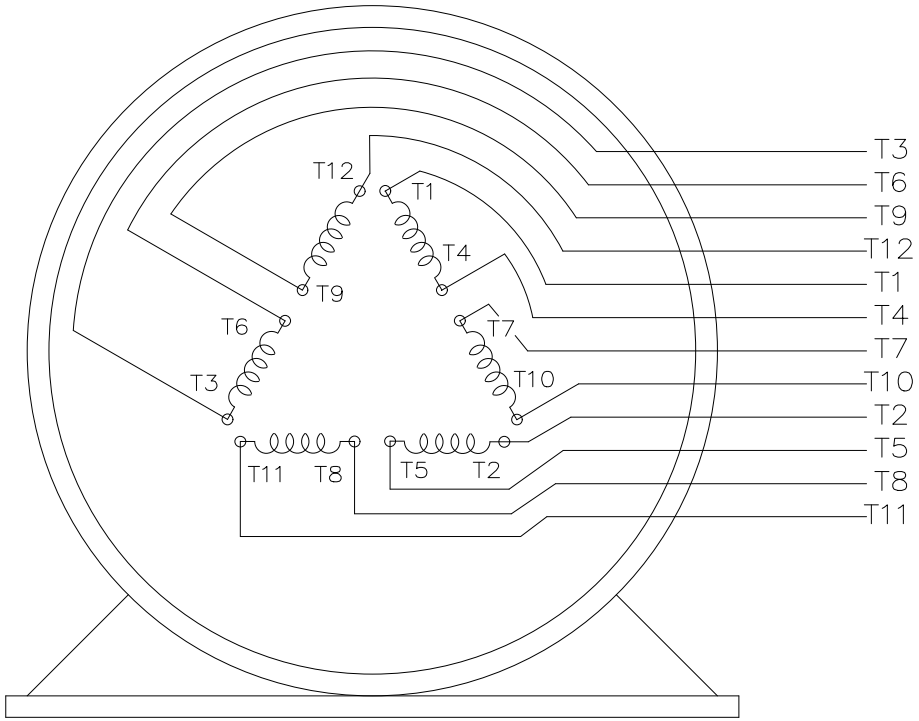

VIEW OF TERMINAL END

T12(W4)
T1(U1)
T6(W2)
T7(U3)
LINE 1

T2(V1)
T4(U2)
T8(V3)
T10(U4)
LINE 2

T3(W1)
T5(V2)
T9(W3)
T11(V4)
LINE 3

DRAWING REVISION: E	REVISION BY: SB	REV DATE/ © DATE: 08/04/2025
REQUEST NUMBER: CR-0023654	APPROVED BY: SBD	DATE: 08/04/2025
REQUEST NUMBER DESCRIPTION: DRAWING TITLE BLOCK UPDATED		

COPYRIGHT (PER REVISION DATE) MARATHON ELECTRIC, LLC. ALL RIGHTS RESERVED.
PROPRIETARY AND CONFIDENTIAL INFORMATION - THIS DOCUMENT IS THE PROPERTY OF MARATHON ELECTRIC, LLC. ("OWNER") AND CONTAINS OWNER'S PROPRIETARY INFORMATION. ANY PERSON, CORPORATION OR OTHER FIRM RECEIVING IT IS DEEMED, BY RECEIVING IT, TO AGREE THAT IT, AND/OR ANY PART OF IT, SHALL NOT BE DISCLOSED TO ANY PERSON, CORPORATION OR OTHER ENTITY, DUPLICATED, AND/OR USED, EXCEPT AS EXPRESSLY APPROVED IN WRITING IN ADVANCE BY OWNER. THIS DOCUMENT SHALL BE RETURNED TO OWNER UPON REQUEST. IT MAY BE SUBJECT TO CERTAIN RESTRICTIONS UNDER APPLICABLE EXPORT CONTROL LAWS AND REGULATIONS.

PRIMARY DIMENSIONS ARE INCH
mm DIMENSIONS IN [BRACKETS]
ARE FOR REFERENCE ONLY

DRAWN BY: RJW	marathon™	
DATE: 02/11/2005		
APPROVED BY: GK	DESCRIPTION: CONNECTION DIAGRAM 12 LEAD - SINGLE VOLTAGE	
DATE: 02/11/2005		
REFERENCE	MATERIAL	PROCESS/FINISH
THIRD ANGLE PROJECTION	SIZE: A / DRAWING NUMBER: EE7300BH	SHEET: 1 OF 1

Uncontrolled Copy

Data Sheet

Date: 12/14/2018
Customer:
Attention:
Submitted by: FAREEDA DUDEKULA

marathon® electric

326TSTDCD4008

Submittal

Data @ 575 V

Motor Load Data

Load	0%	25%	50%	75%	100%	115%	125%	LR	
Current (Amps)	13.2	18.8	29.2	40.8	54.4	62.4	68.8	308	
Torque (ft-lb)	0.00	22.0	44.0	66.0	88.5	102	111	132	
RPM	3600	3590	3582	3575	3565	3,558	3552	0	
Efficiency (%)		89.5	92.4	93.0	93.0	92.4	91.7		
P.F. (%)	8.5	68.0	83.0	88.0	89.0	89.0	89.0	33.0	

Motor Speed Data

	LR	Pull-Up	BD	Rated	Idle
Speed (RPM)	0	1800	3450	3565	3600
Current (Amps)	308	260	180	54.4	13.2
Torque (ft-lb)	132	90.0	190	88.5	0.00

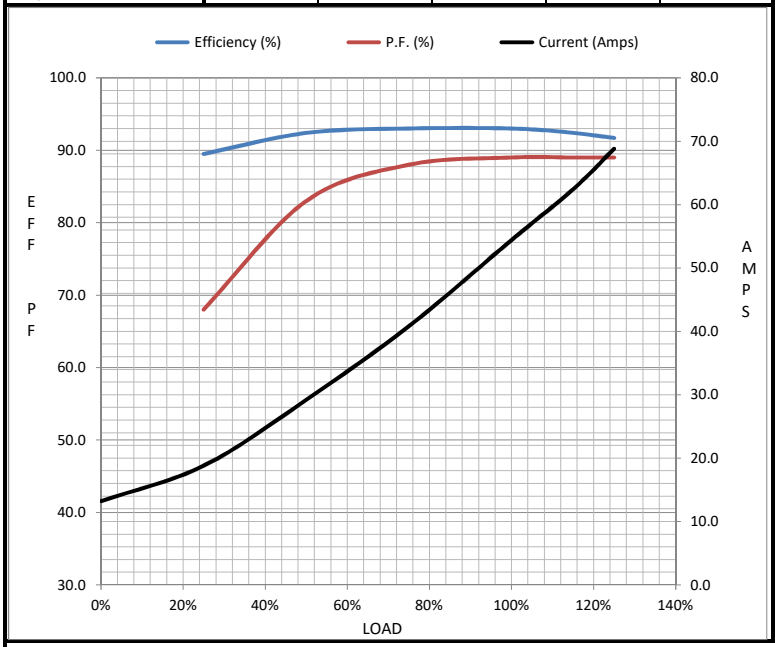

Information Block

HP	60.0	
Sync. RPM	3600	
Frame	326	
Enclosure	DP	
Construction	TDC	
Voltage	575	V
Frequency	60	Hz
Design	B	
LR Code letter	F	
Service Factor	1.15	
Temp Rise @ FL	45	° C
Duty	CONT	
Ambient	40	° C
Elevation	1,000	feet
Rotor/Shaft wk²	0.00	Lb-Ft²
Ref Wdg	IE3L2002111 NONE	
Sound Pressure @ 1M	999	dBA
VFD Rating	NONE	
Outline Dwg	SS620744	
Conn. Diag	EE7300BH	
Additional Specifications:		
0		
0		

EQUIV CKT (OHMS / PHASE)

R1	R2	X1	X2	Xm
0.1290	0.0630	0.5840	0.7760	25.1430

Speed -Torque Curve

