marathon®

Inverter (Vector) Duty Motors

Model No: 324THFCD8028
Catalog No: Y571A

Inverter (Vector) Duty Motor, 40 HP, 3 Ph, 60 Hz, 230/460 V, 1800 RPM, 324T Frame, TEFC

©2026 Marathon, All Rights Reserved.

marathon®

Product Information Packet: Model No: 324THFCD8028, Catalog No: Y571A Inverter (Vector) Duty Motor, 40 HP, 3 Ph, 60 Hz, 230/460 V, 1800 RPM, 324T Frame, TEFC

Nameplate Specifications

Phase	**3**	Output HP	**40 Hp**
Output KW	**30.0 kW**	Voltage	**230/460 V**
Speed	**1775 r/min**	Synchronous RPM	**1800 r/min**
Service Factor	**1.00**	Frame	**324T**
Enclosure	**Totally Enclosed Fan Cooled**	Thermal Protection	**Thermostat**
Efficiency	**92.4 %**	Ambient Temperature	**40 °C**
Frequency	**60 Hz**	Current	**89.0/44.5 A**
Power Factor	**89.5**	Duty	**Continuous**
Insulation Class	**H**	Design Code	**INV**
KVA Code	**H**	Drive End Bearing Size	**6312**
Opp Drive End Bearing Size	**6212**	UL	**Recognized**
CSA	**Y**	CE	**Y**
IP Code	**55**	Number of Speeds	**1**

Technical Specifications

Electrical Type	**Squirrel Cage Inverter Duty**	Starting Method	**Inverter Only**
Poles	**4**	Rotation	**Reversible**
Resistance Main	**.2192 O**	Mounting	**Rigid Base**
Motor Orientation	**Horizontal**	Drive End Bearing	**Ball**
Opp Drive End Bearing	**Ball**	Frame Material	**Cast Iron**
Shaft Type	**T**	Shaft Diameter	**2.125 in**
Assembly/Box Mounting	**F1/F2 Capable**	Inverter Load	**Constant 2000:1**

Drawings

Connection Drawing	**EE7308T**	Outline Drawing	**SS313116-100**

This is an uncontrolled document once printed or downloaded and is subject to change without notice. Date Created: 15/10/2026

DASH NO.	B	C	E	2E	2F	2FF	BA	BS	MOUNTING	FRAME
100	12.71	32.04	6.25	12.50	---	10.50	5.25	5.25	F1 OR F2	324T
200	14.21	33.54			10.50	12.00		6.00		324/326T

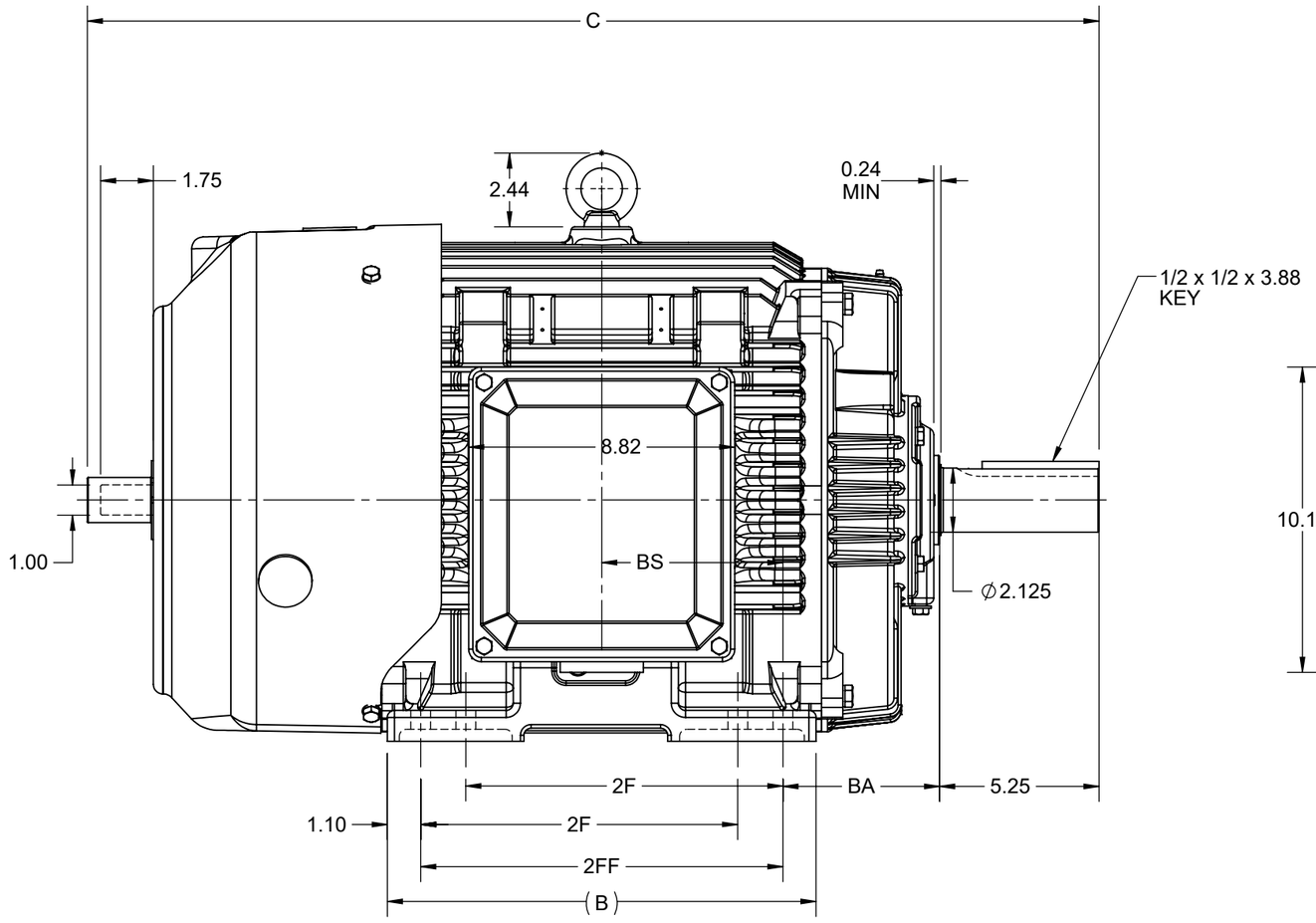

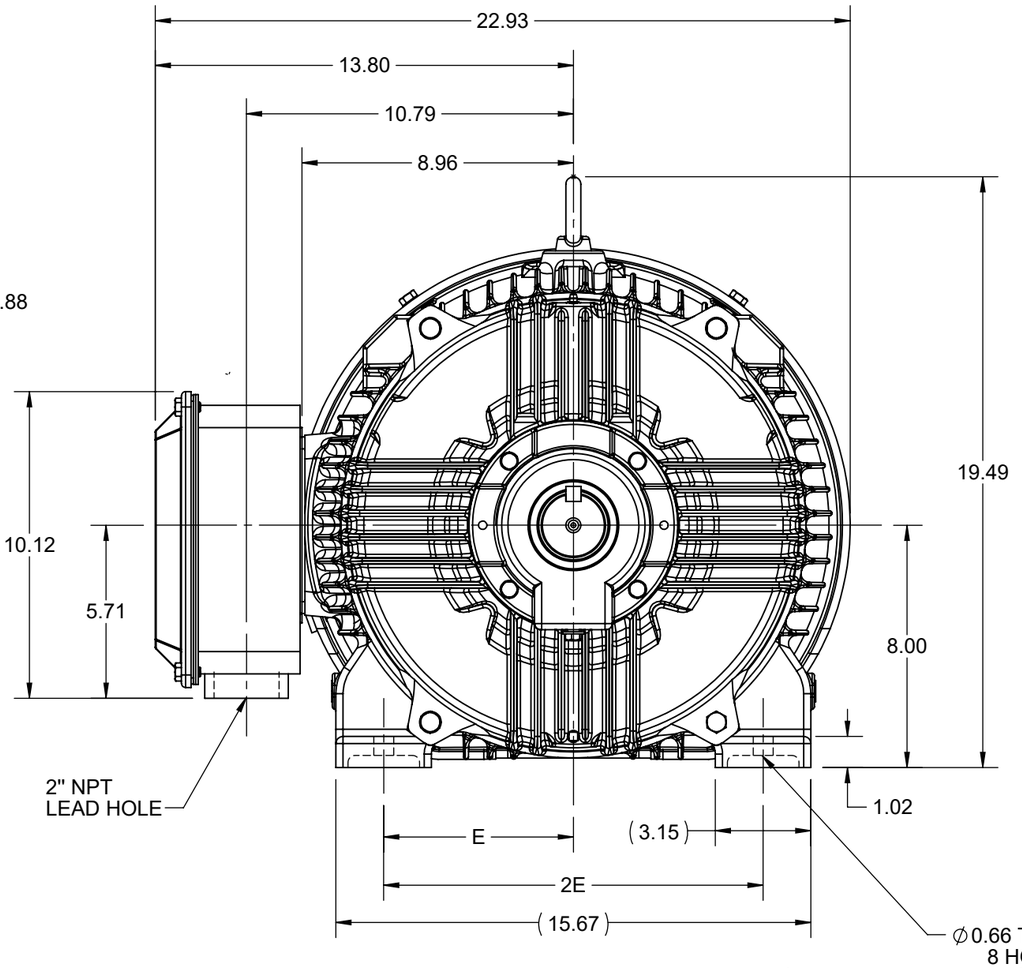

F2 VIEW

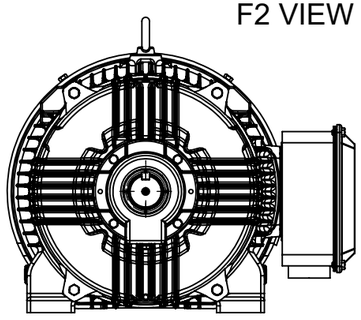

DRAWING REVISION: C	REVISION BY: SB	REV DATE/© DATE: 08/20/2025
REQUEST NUMBER: CR-0023556	APPROVED BY: SBD	DATE: 08/20/2025
REQUEST NUMBER DESCRIPTION: DRAWING TITLE BLOCK UPDATED		

COPYRIGHT (PER REVISION DATE) MARATHON ELECTRIC, LLC. ALL RIGHTS RESERVED. PROPRIETARY AND CONFIDENTIAL INFORMATION - THIS DOCUMENT IS THE PROPERTY OF MARATHON ELECTRIC, LLC. ("OWNER") AND CONTAINS OWNER'S PROPRIETARY INFORMATION. ANY PERSON, CORPORATION OR OTHER FIRM RECEIVING IT IS DEEMED, BY RECEIVING IT, TO AGREE THAT IT, AND/OR ANY PART OF IT, SHALL NOT BE DISCLOSED TO ANY PERSON, CORPORATION OR OTHER ENTITY, DUPLICATED, AND/OR USED, EXCEPT AS EXPRESSLY APPROVED IN WRITING IN ADVANCE BY OWNER. THIS DOCUMENT SHALL BE RETURNED TO OWNER UPON REQUEST. IT MAY BE SUBJECT TO CERTAIN RESTRICTIONS UNDER APPLICABLE EXPORT CONTROL LAWS AND REGULATIONS.

PRIMARY DIMENSIONS ARE INCH
mm DIMENSIONS IN [BRACKETS]
ARE FOR REFERENCE ONLY

DRAWN BY: MSH	marathon™	
DATE: 25/08/2020	DESCRIPTION: OUTLINE 324/326T FR-NEMA-TEFC-CAST IRON-TACH MTG.	
APPROVED BY: SBD		
DATE: 25/08/2020		
REFERENCE	MATERIAL: -	PROCESS/FINISH
THIRD ANGLE PROJECTION	SIZE: B / DRAWING NUMBER: SS313116	SHEET: 1 OF 1

HIGH VOLTAGE

(U1) T1 — L1
(V1) T2 — L2
(W1) T3 — L3
(U2) T4
(U3) T7
(V2) T5
(V3) T8
(W2) T6
(W3) T9

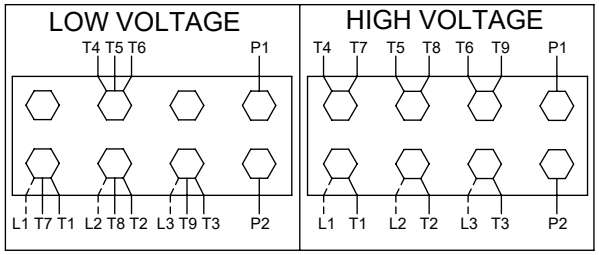

THREE PHASE
DUAL VOLTAGE MOTOR

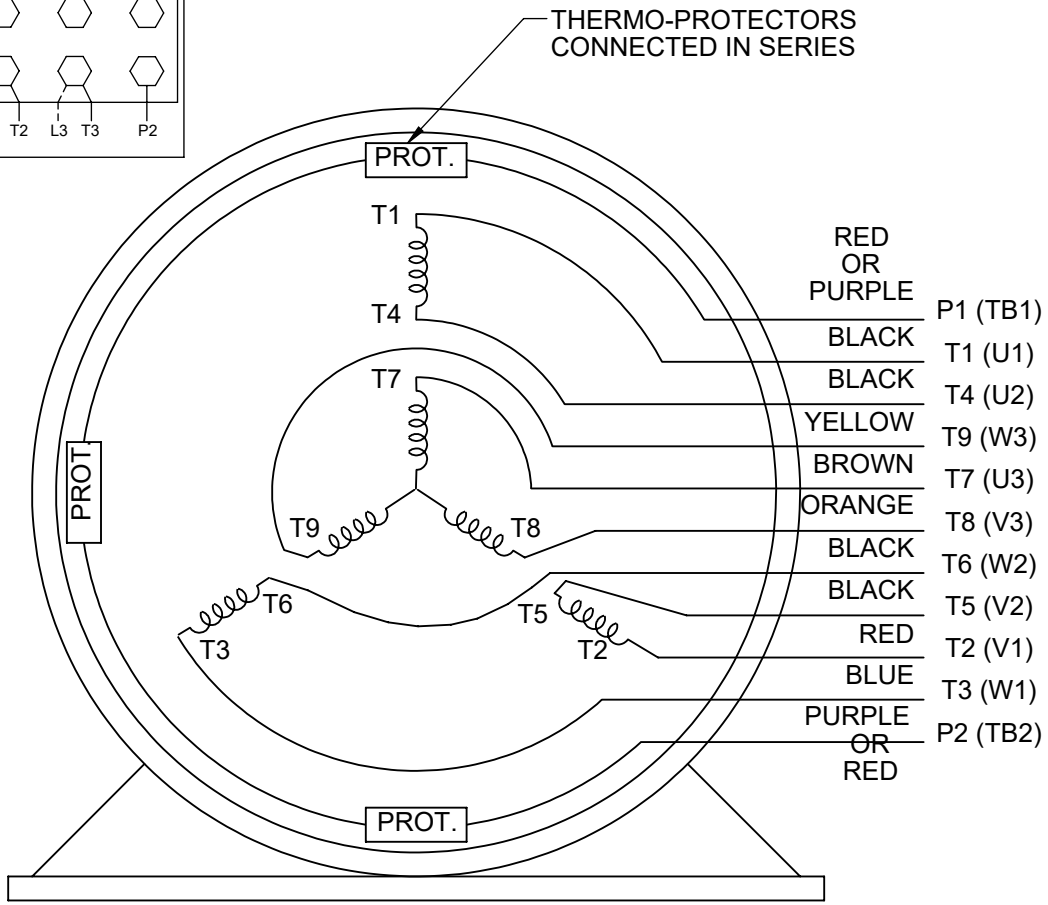

VIEW OF TERMINAL END

NOTE FOR FACTORY USE ONLY:
TO SURGE TEST FOR COMMON CONNECT:
HIGH VOLT: CONNECT P1 TO T1
THEN P2 TO L1
LOW VOLT: CONNECT P1 TO T1 & T7,
THEN P2 TO L1

LOW VOLTAGE

(U1) T1 — L1
(U3) T7 — L1
(V1) T2 — L2
(V3) T8 — L2
(W1) T3 — L3
(W3) T9 — L3
(U2) T4
(V2) T5
(W2) T6

NOTE: LEAD'S COLOR CAN BE YELLOW OR WHITE FOR IMG PLANT

DRAWING REVISION: U	REVISION BY: SB	REV DATE/© DATE: 08/01/2025	PRIMARY DIMENSIONS ARE INCH mm DIMENSIONS IN [BRACKETS] ARE FOR REFERENCE ONLY	DRAWN BY: SMC	marathon™
REQUEST NUMBER: CR-0023654	APPROVED BY: SBD	DATE: 08/01/2025		DATE: 05-13-1992	
REQUEST NUMBER DESCRIPTION: DRAWING TITLE BLOCK UPDATED				APPROVED BY: TB	DESCRIPTION: CONN DIAGRAM-EXTERNAL
				DATE: 05-13-1992	3 PHASE - DUAL VOLTAGE MOTOR
				REFERENCE: EE7308/EE7300	MATERIAL / PROCESS/FINISH
				THIRD ANGLE PROJECTION	SIZE: A — DRAWING NUMBER: EE7308T — SHEET: 1 OF 1

COPYRIGHT (PER REVISION DATE) MARATHON ELECTRIC, LLC. ALL RIGHTS RESERVED. PROPRIETARY AND CONFIDENTIAL INFORMATION - THIS DOCUMENT IS THE PROPERTY OF MARATHON ELECTRIC, LLC. ("OWNER") AND CONTAINS OWNER'S PROPRIETARY INFORMATION. ANY PERSON, CORPORATION OR OTHER FIRM RECEIVING IT IS DEEMED, BY RECEIVING IT, TO AGREE THAT IT, AND/OR ANY PART OF IT, SHALL NOT BE DISCLOSED TO ANY PERSON, CORPORATION OR OTHER ENTITY, DUPLICATED, AND/OR USED, EXCEPT AS EXPRESSLY APPROVED IN WRITING IN ADVANCE BY OWNER. THIS DOCUMENT SHALL BE RETURNED TO OWNER UPON REQUEST. IT MAY BE SUBJECT TO CERTAIN RESTRICTIONS UNDER APPLICABLE EXPORT CONTROL LAWS AND REGULATIONS.

Data Sheet

Date: 9/27/2021
Customer:
Attention:
Submitted by:

marathon® Motors

324THFCD8028

Submittal

Data @ 460 V

Motor Load Data

Load	0%	25%	50%	75%	100%	115%	125%	LR	
Current (Amps)	12.0	16.0	24.0	34.0	44.5	51.5	56.5	356	
Torque (ft-lb)	0.00	29.3	58.7	88.4	118	136	148	170	
RPM	1800	1795	1788	1782	1775	1,772	1770	0	
Efficiency (%)		89.6	93.0	93.0	92.4	92.6	92.2		
P.F. (%)	8.0	64.5	82.5	88.0	89.5	90.0	89.5	33.5	

Motor Speed Data

	LR	Pull-Up	BD	Rated	Idle
Speed (RPM)	0	888	1600	1775	1800
Current (Amps)	356	320	227	44.5	12.0
Torque (ft-lb)	170	145	385	118	0.00

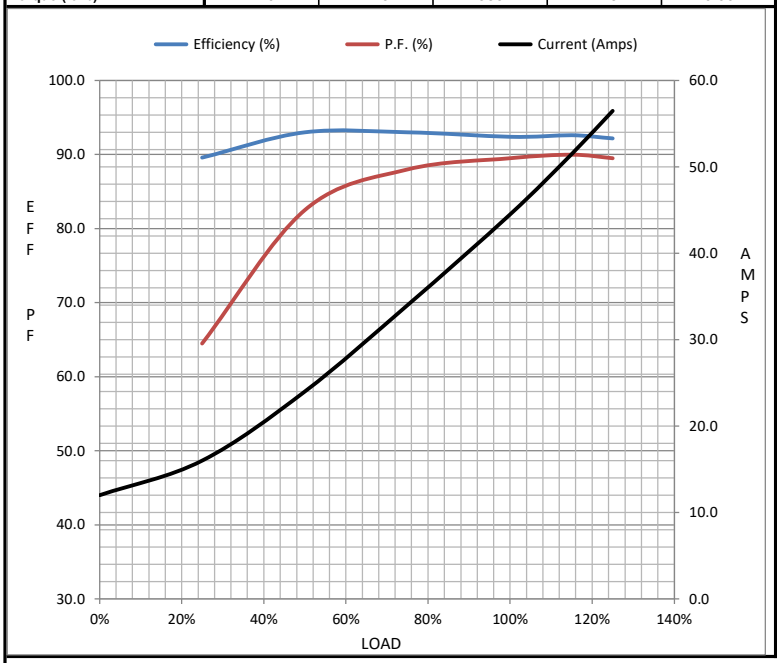

Information Block

HP	40.0	
Sync. RPM	1800	
Frame	324	
Enclosure	TEFC	
Construction	TFN	
Voltage	230/460	V
Frequency	60	Hz
Design	INV	
LR Code letter	H	
Service Factor	1.15	
Temp Rise @ FL	60	° C
Duty	CONT	
Ambient	40	° C
Elevation	3,300	feet
Rotor/Shaft wk²	11.467	Lb-Ft²
Ref Wdg	HA32004021 NONE	
Sound Pressure @ 1M	66	dBA
VFD Rating	CONSTANT 2000:1	
Outline Dwg	SS313116-100	
Conn. Diag	EE7308T	

Additional Specifications:

0

0

EQUIV CKT (OHMS / PHASE)

R1	R2	X1	X2	Xm
0.1370	0.0750	0.6490	0.6130	21.5750

Speed -Torque Curve

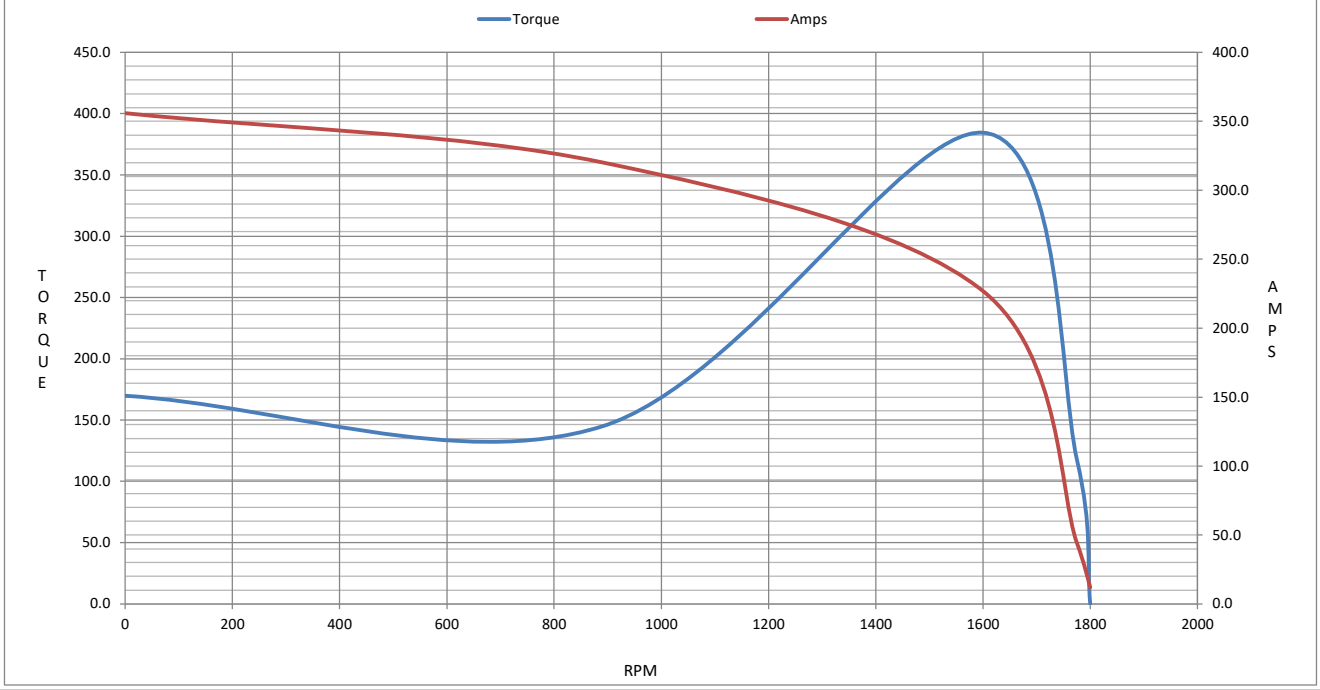

P.O. BOX 8003
WAUSAU, WI 54401-8003
PH. 715-675-3311

marathon® Motors

DATA VOLTS: 460

CERTIFICATION DATA SHEET

CUSTOMER:
ORDER #:
CONN. DIAGRAM: EE7308T
OUTLINE: SS313116-100
WINDING: HA32004021 NONE 2
SPEED:

CUSTOMER P.O. #:
REFERENCE MODEL #: 324THFCD8028
CAT #: Y571A
CUSTOMER PART #:
MOUNTING: F1/F2 CAPABLE

TYPICAL MOTOR PERFORMANCE DATA

HP	KW	SYNC RPM	FL RPM	FRAME	ENCLOSURE	TYPE	KVA CODE	DESIGN
40	30	1800	1775	324T	TEFC	TFN	H	INV

PH	HZ	VOLTS	AMPS	START TYPE	DUTY	INSL	S.F.	AMB	ELEV.
3	60	230/460	89/44.5	INVERTER ONLY	CONT	H	1.15	40	3300

F.L. EFF	92.4	3/4 LD EFF	93.0	1/2 LD EFF	93.0	GTD EFF	ELECT. TYPE
F.L. PF	89.5	3/4 LD PF	88.0	1/2 LD PF	82.5	91.7	SQ CAGE INV DUTY

F.L. TORQUE	LR AMPS @ 460 V	L.R. TORQUE	B.D. TORQUE	F.L. RISE (° C)	
118 LB-FT	356	170 LB-FT 144%	385 LB-FT 326%	60	

SOUND PRESSURE @ 3 FT.	SOUND POWER	ROTOR WK²	MAX. LOAD WK²	SAFE STALL TIME	STARTS/HOUR	APROX. MOTOR WGT
66 dBA	75 dBA	11.467 LB-FT²	50 LB-FT²	25 SEC.	2	610 LB.

*** SUPPLEMENTAL INFORMATION ***

DE BRACKET TYPE	ODE BRACKET TYPE	MOUNT TYPE	MOTOR ORIENTATION	SEVERE DUTY	HAZARDOUS LOCATION	DRIP COVER	SCREENS	PAINT
STANDARD	ENCODER	RIGID	HORIZONTAL	NO	NONE	YES	NONE	BLUE (ENAMEL)

BEARINGS DE	BEARINGS ODE	GREASE	SHAFT TYPE	SPECIAL DE	SPECIAL ODE	SHAFT MATERIAL	FRAME MATERIAL
BALL	BALL	POLYREX EM	T	NONE	NONE	1045 HOT ROLLED (C-204)	CAST IRON
6312	6212						

THERMOSTATS	PROTECTORS	WDG RTD's	BRG RTD's	THERMISTORS	CONTROL	SPACE HEATERS
TSTATS (N/C)	NOT	NONE	NONE	NONE	FALSE	NA

R1 (ohms/ph)	R2 (ohms/ph)	X1 (ohms/ph)	X2 (ohms/ph)	Xm (ohms/ph)	VIBRATION (in/sec)	FLOAT
0.137	0.075	0.649	0.613	21.575	0.150	ODE

* NOTES *

INVERTER TORQUE: CONSTANT 2000:1
INV. HP SPEED RANGE: 1.5 X BASE SPEED

ENCODER: NONE
NONE
NONE NONE PPR

BRAKE: NONE
NONE NONE
FT-LB: NA
VOLTAGE: NONE HZ:

UL: V-INS, CONST, OVERHEAT PRT DEV UL REC

PREPARED BY:
DATE: 9/27/2021

FORM: 3531 REV_4 2/27/06