marathon®

Fire Pump Motors

Model No: 286TTDBD4041
Catalog No: U554

Fire Pump Motor, 30 & 25 HP, 3 Ph, 60 & 50 Hz, 230/460 & 190/380 V, 1800 RPM, 286T Frame, DP

©2026 Marathon, All Rights Reserved.

marathon®

Product Information Packet: Model No: 286TTDBD4041, Catalog No: U554 Fire Pump Motor, 30 & 25 HP, 3 Ph, 60 & 50 Hz, 230/460 & 190/380 V, 1800 RPM, 286T Frame, DP

Nameplate Specifications

Phase	**3**	Output HP	**30 & 25 Hp**
Output KW	**22.4 & 18.7 kW**	Voltage	**230/460 & 190/380 V**
Speed	**1770 & 1468 r/min**	Synchronous RPM	**1800 & 1500 r/min**
Service Factor	**1.15 & 1.15**	Frame	**286T**
Enclosure	**Drip Proof**	Thermal Protection	**No Protection**
Efficiency	**92.4 & 91 %**	Ambient Temperature	**50 °C**
Frequency	**60 & 50 Hz**	Current	**72/36 & 73/36.5 A**
Power Factor	**84**	Duty	**Continuous**
Insulation Class	**F**	Design Code	**B**
KVA Code	**F**	Drive End Bearing Size	**6311**
Opp Drive End Bearing Size	**6210**	UL	**Listed**
CSA	**Y**	CE	**Y**
IP Code	**23**	Number of Speeds	**1**

Technical Specifications

Electrical Type	**Squirrel Cage Induction Run**	Starting Method	**Part Wdg Start Low Volt Only & Wye Start Delta Run**
Poles	**4**	Rotation	**Reversible**
Resistance Main	**.43 O**	Mounting	**Rigid Base**
Motor Orientation	**Horizontal**	Drive End Bearing	**Ball**
Opp Drive End Bearing	**Ball**	Frame Material	**Rolled Steel**
Shaft Type	**T**	Overall Length	**27.09 in**
Frame Length	**13.97 in**	Shaft Diameter	**1 7/8 in**
Shaft Extension	**4.62 in**	Assembly/Box Mounting	**F1/F2 Capable**

Drawings

Connection Drawing	**EE7308AA**	Outline Drawing	**SS620687-286T**

This is an uncontrolled document once printed or downloaded and is subject to change without notice. Date Created: 16/10/2026

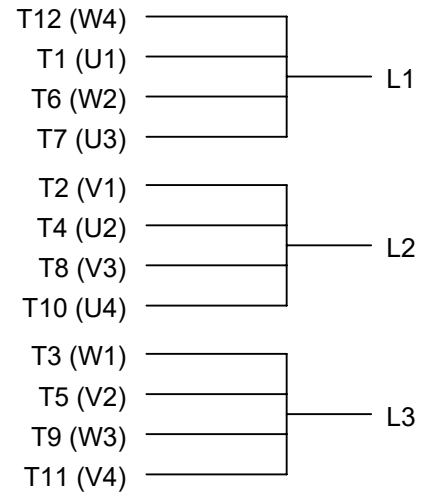

LOW VOLTAGE

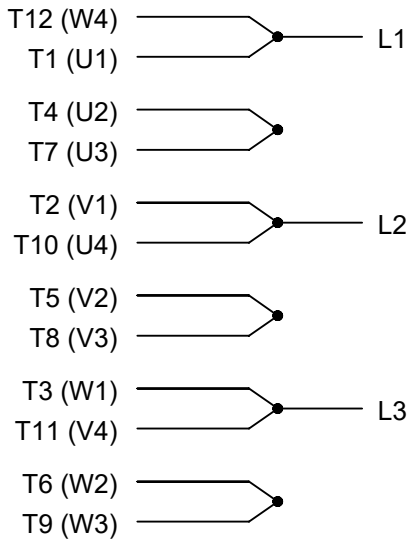

HIGH VOLTAGE

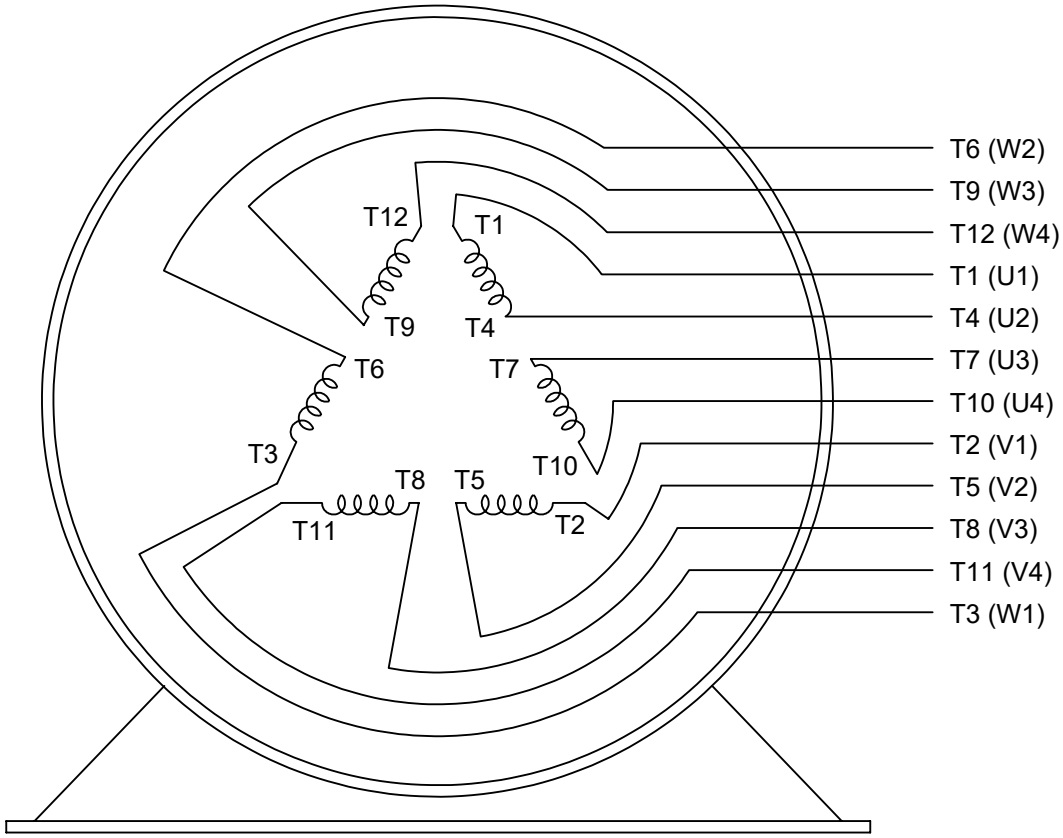

VIEW OF TERMINAL END

DRAWING REVISION: L	REVISION BY: SB	REV DATE/© DATE: 08/01/2025	PRIMARY DIMENSIONS ARE INCH mm DIMENSIONS IN [BRACKETS] ARE FOR REFERENCE ONLY	DRAWN BY: LZ	marathon™
REQUEST NUMBER: CR-0023654	APPROVED BY: SBD	DATE: 08/01/2025		DATE: 01-12-1994	
REQUEST NUMBER DESCRIPTION: DRAWING TITLE BLOCK UPDATED				APPROVED BY: GK	DESCRIPTION: CONN DIAGRAM-EXTERNAL 3Ø-2/1 DELTA-12 LEADS
				DATE: 01-14-1994	
				REFERENCE	MATERIAL / PROCESS/FINISH
				THIRD ANGLE PROJECTION	SIZE: A / DRAWING NUMBER: EE7308AA / SHEET: 1 OF 1

COPYRIGHT (PER REVISION DATE) MARATHON ELECTRIC, LLC. ALL RIGHTS RESERVED. PROPRIETARY AND CONFIDENTIAL INFORMATION - THIS DOCUMENT IS THE PROPERTY OF MARATHON ELECTRIC, LLC. ("OWNER") AND CONTAINS OWNER'S PROPRIETARY INFORMATION. ANY PERSON, CORPORATION OR OTHER FIRM RECEIVING IT IS DEEMED, BY RECEIVING IT, TO AGREE THAT IT, AND/OR ANY PART OF IT, SHALL NOT BE DISCLOSED TO ANY PERSON, CORPORATION OR OTHER ENTITY, DUPLICATED, AND/OR USED, EXCEPT AS EXPRESSLY APPROVED IN WRITING IN ADVANCE BY OWNER. THIS DOCUMENT SHALL BE RETURNED TO OWNER UPON REQUEST. IT MAY BE SUBJECT TO CERTAIN RESTRICTIONS UNDER APPLICABLE EXPORT CONTROL LAWS AND REGULATIONS.

Uncontrolled Copy

Data Sheet

Date: 12/12/2018
Customer:
Attention:
Submitted by: FAREEDA DUDEKULA

marathon® electric

286TTDBD4041

Submittal

Data @ 460 V

Motor Load Data

Load	0%	25%	50%	75%	100%	115%	125%	LR	
Current (Amps)	13.0	15.0	21.0	28.0	36.0	41.0	45.0	200	
Torque (ft-lb)	0.00	22.2	44.4	66.6	88.8	102	111	150	
RPM	1800	1792	1785	1778	1770	1,765	1760	0	
Efficiency (%)		90.2	91.0	92.4	92.4	91.7	94.0		
P.F. (%)	4.5	51.0	73.0	81.0	84.0	85.0	83.0	42.0	

Motor Speed Data

	LR	Pull-Up	BD	Rated	Idle
Speed (RPM)	0	900	1675	1770	1800
Current (Amps)	200	175	120	36.0	13.0
Torque (ft-lb)	150	130	200	88.8	0.00

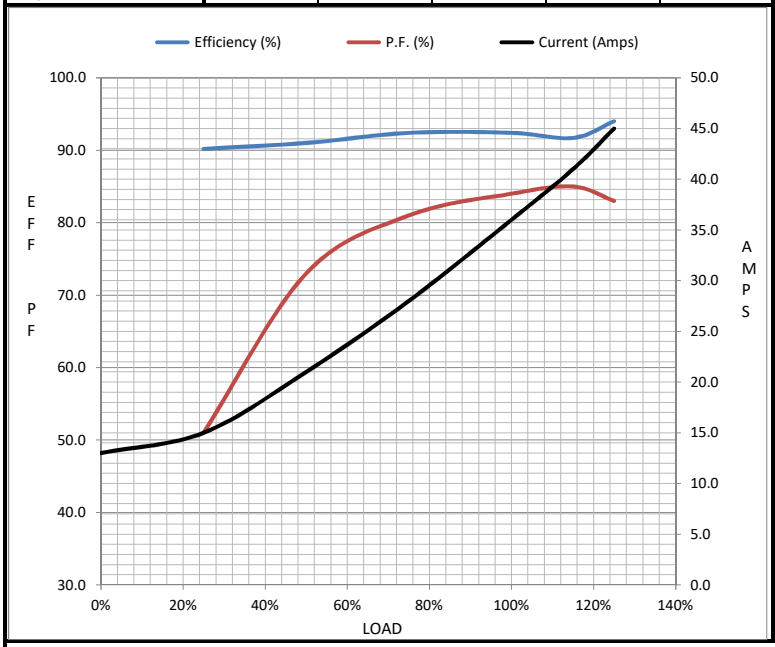

Information Block

HP	30.0	
Sync. RPM	1800	
Frame	286	
Enclosure	DP	
Construction	TDB	
Voltage	230/460#190/380	V
Frequency	60	Hz
Design	B	
LR Code letter	F	
Service Factor	1.15	
Temp Rise @ FL	0	° C
Duty	CONT	
Ambient	40	° C
Elevation	1,000	feet
Rotor/Shaft wk²	0.00	Lb-Ft²
Ref Wdg	IE3L1804111 NONE	
Sound Pressure @ 1M	999	dBA
VFD Rating	NONE	
Outline Dwg	SS620687	
Conn. Diag	EE7308AA	
Additional Specifications:		
0		
0		

EQUIV CKT (OHMS / PHASE)

R1	R2	X1	X2	Xm
0.2650	0.1230	0.7190	0.9740	20.7650

Speed -Torque Curve

