marathon®

Inverter (Vector) Duty Motors

Model No: 286THFCD8038
Catalog No: Y512A

Inverter (Vector) Duty Motor, 30 HP, 3 Ph, 60 Hz, 230/460 V, 1800 RPM, 286TC Frame, TEBC-AXIAL

©2026 Marathon, All Rights Reserved.

marathon®

Product Information Packet: Model No: 286THFCD8038, Catalog No: Y512A Inverter (Vector) Duty Motor, 30 HP, 3 Ph, 60 Hz, 230/460 V, 1800 RPM, 286TC Frame, TEBC-AXIAL

Nameplate Specifications

Phase	**3**	Output HP	**30 Hp**
Output KW	**22.4 kW**	Voltage	**230/460 V**
Speed	**1776 r/min**	Synchronous RPM	**1800 r/min**
Service Factor	**1.00**	Frame	**286TC**
Enclosure	**Totally Enclosed Blower cooled - Axial**	Thermal Protection	**Thermostat**
Efficiency	**93.6 %**	Ambient Temperature	**40 °C**
Frequency	**60 Hz**	Current	**70.5/35.5 A**
Power Factor	**85**	Duty	**Continuous**
Insulation Class	**H**	Design Code	**INV**
KVA Code	**K**	Drive End Bearing Size	**6311**
Opp Drive End Bearing Size	**6211**	UL	**Recognized**
CSA	**Y**	CE	**Y**
IP Code	**55**	Number of Speeds	**1**

Technical Specifications

Electrical Type	**Squirrel Cage Inverter Duty**	Starting Method	**Inverter Only**
Poles	**4**	Rotation	**Reversible**
Resistance Main	**.248 O**	Mounting	**Rigid Base**
Motor Orientation	**Horizontal**	Drive End Bearing	**Ball**
Opp Drive End Bearing	**Ball**	Frame Material	**Cast Iron**
Shaft Type	**T**	Shaft Diameter	**1.875 in**
Assembly/Box Mounting	**F1/F2 Capable**	Inverter Load	**Constant 2000:1**

Drawings

Connection Drawing	**EE7308T**	Outline Drawing	**SS621113-200**

This is an uncontrolled document once printed or downloaded and is subject to change without notice. Date Created: 15/10/2026

DASH NO.	B	C	E	2E	2F	2FF	AG	AH	BA	BV	MOUNTING	FRAME
100	10.83	33.77	5.50	11.00	---	9.50	29.40	4.38	4.75	9.76	F1 OR F2	284TC
200	12.68	35.27			9.50	11.00	30.90			10.50		284/286TC

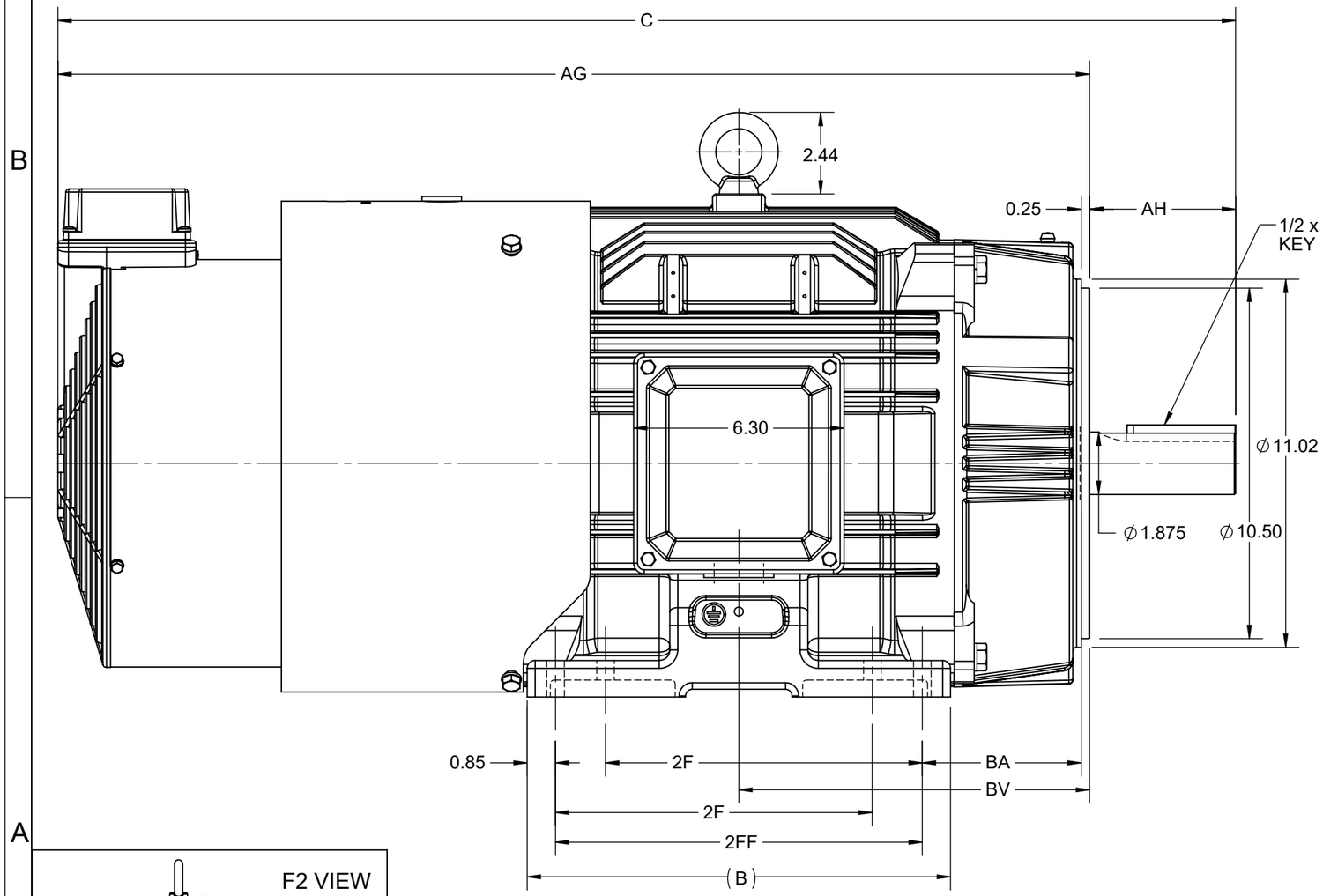

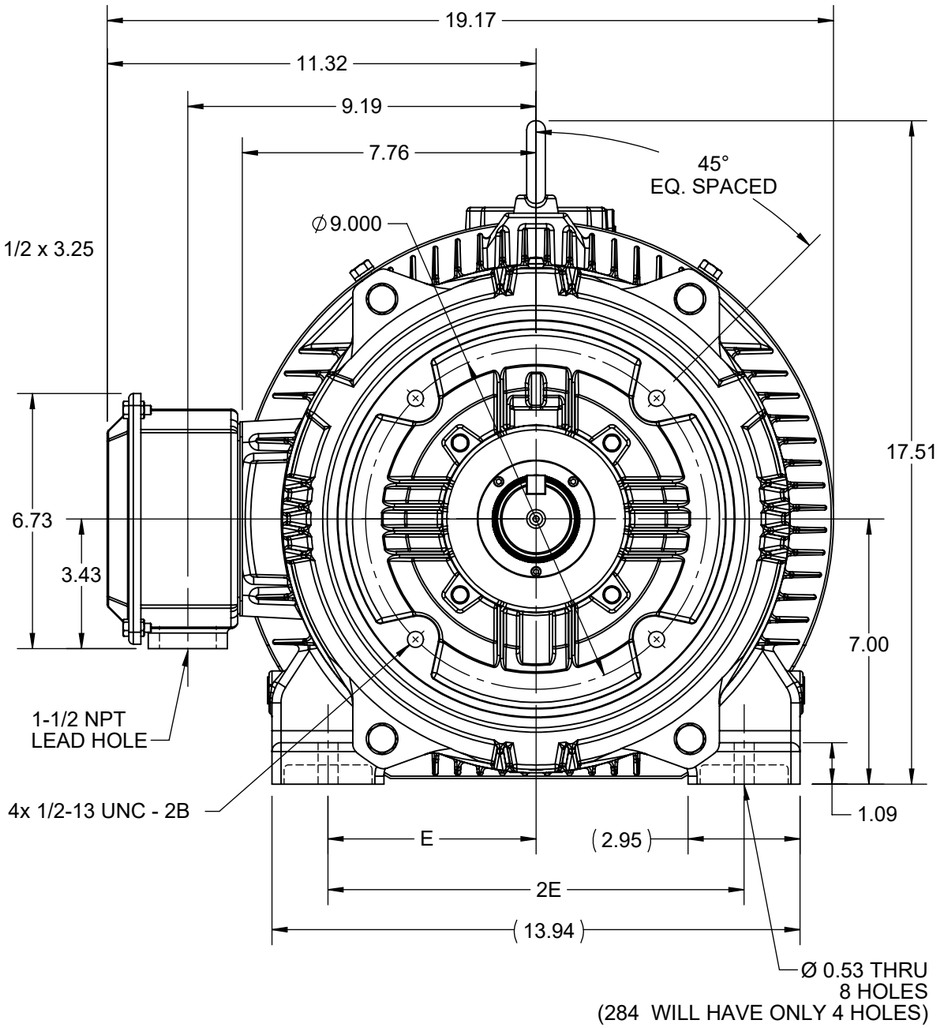

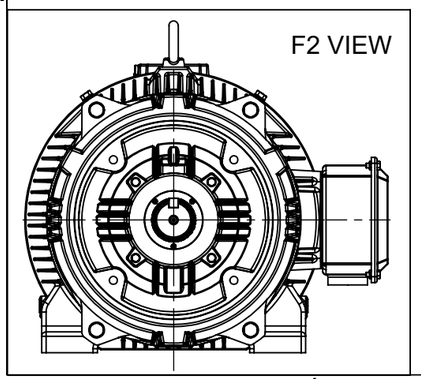

DRAWING REVISION: B	REVISION BY: SB	REV DATE/© DATE: 07/25/2025
REQUEST NUMBER: CR-0023600	APPROVED BY: SBD	DATE: 07/25/2025
REQUEST NUMBER DESCRIPTION: DRAWING TITLE BLOCK UPDATED		

COPYRIGHT (PER REVISION DATE) MARATHON ELECTRIC, LLC. ALL RIGHTS RESERVED. PROPRIETARY AND CONFIDENTIAL INFORMATION - THIS DOCUMENT IS THE PROPERTY OF MARATHON ELECTRIC, LLC. ("OWNER") AND CONTAINS OWNER'S PROPRIETARY INFORMATION. ANY PERSON, CORPORATION OR OTHER FIRM RECEIVING IT IS DEEMED, BY RECEIVING IT, TO AGREE THAT IT, AND/OR ANY PART OF IT, SHALL NOT BE DISCLOSED TO ANY PERSON, CORPORATION OR OTHER ENTITY, DUPLICATED, AND/OR USED, EXCEPT AS EXPRESSLY APPROVED IN WRITING IN ADVANCE BY OWNER. THIS DOCUMENT SHALL BE RETURNED TO OWNER UPON REQUEST. IT MAY BE SUBJECT TO CERTAIN RESTRICTIONS UNDER APPLICABLE EXPORT CONTROL LAWS AND REGULATIONS.

PRIMARY DIMENSIONS ARE INCH
mm DIMENSIONS IN [BRACKETS]
ARE FOR REFERENCE ONLY

DRAWN BY: BISWA	marathon™	
DATE: 15/12/2020	DESCRIPTION: OUTLINE 284/286TC FR-NEMA-TEBC AXIAL BLOWER	
APPROVED BY: SBD		
DATE: 15/12/2020		
REFERENCE	MATERIAL	PROCESS/FINISH
THIRD ANGLE PROJECTION	SIZE: B / DRAWING NUMBER: SS621113	SHEET: 1 OF 1

HIGH VOLTAGE

(U1) T1 — L1
(V1) T2 — L2
(W1) T3 — L3
(U2) T4
(U3) T7
(V2) T5
(V3) T8
(W2) T6
(W3) T9

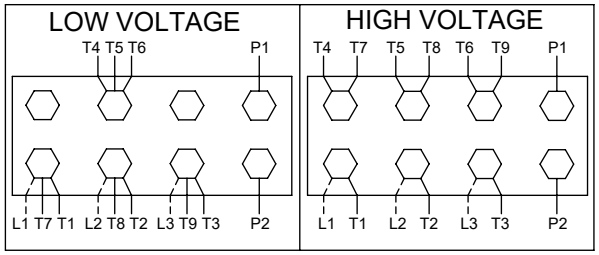

THREE PHASE
DUAL VOLTAGE MOTOR

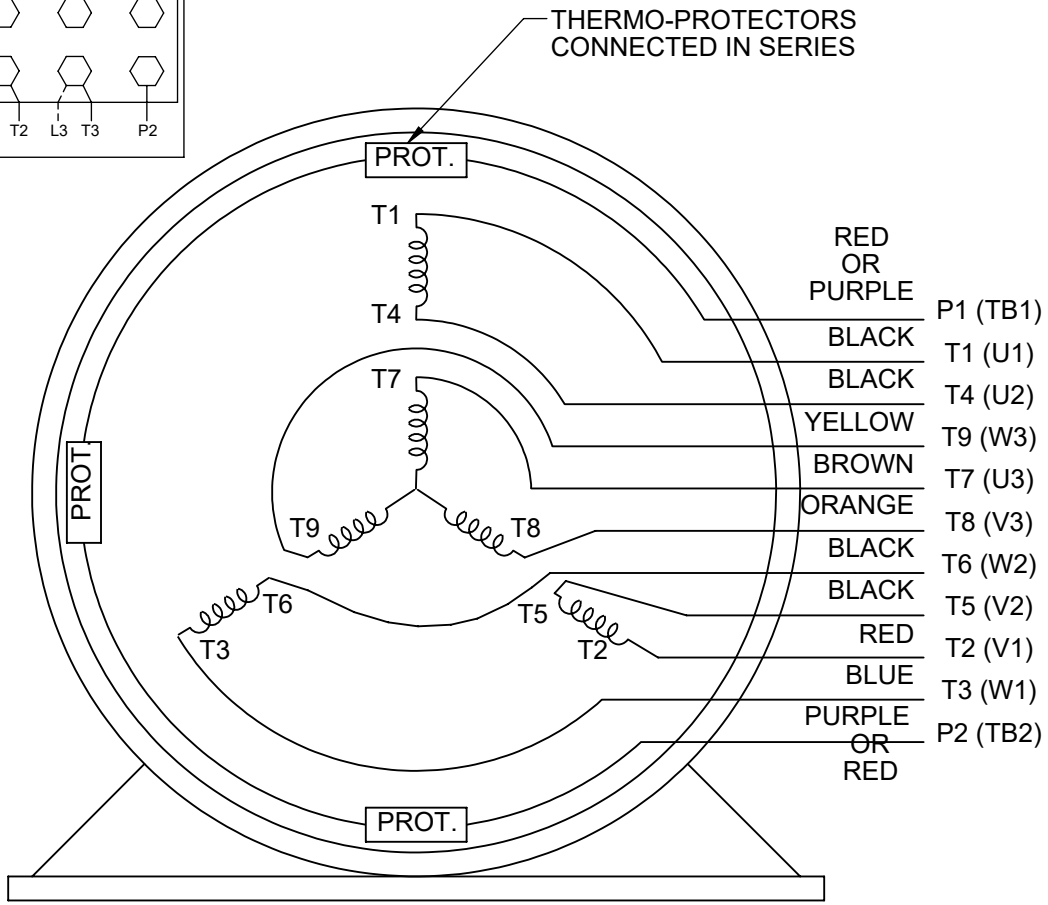

VIEW OF TERMINAL END

NOTE FOR FACTORY USE ONLY:
TO SURGE TEST FOR COMMON CONNECT:
HIGH VOLT: CONNECT P1 TO T1
THEN P2 TO L1
LOW VOLT: CONNECT P1 TO T1 & T7,
THEN P2 TO L1

LOW VOLTAGE

(U1) T1 — L1
(U3) T7 — L1
(V1) T2 — L2
(V3) T8 — L2
(W1) T3 — L3
(W3) T9 — L3
(U2) T4
(V2) T5
(W2) T6

NOTE: LEAD'S COLOR CAN BE YELLOW OR WHITE FOR IMG PLANT

DRAWING REVISION: U	REVISION BY: SB	REV DATE/© DATE: 08/01/2025	PRIMARY DIMENSIONS ARE INCH mm DIMENSIONS IN [BRACKETS] ARE FOR REFERENCE ONLY	DRAWN BY: SMC	marathon™
REQUEST NUMBER: CR-0023654	APPROVED BY: SBD	DATE: 08/01/2025		DATE: 05-13-1992	
REQUEST NUMBER DESCRIPTION: DRAWING TITLE BLOCK UPDATED				APPROVED BY: TB	DESCRIPTION: CONN DIAGRAM-EXTERNAL
				DATE: 05-13-1992	3 PHASE - DUAL VOLTAGE MOTOR
				REFERENCE: EE7308/EE7300	MATERIAL / PROCESS/FINISH
				THIRD ANGLE PROJECTION	SIZE: A — DRAWING NUMBER: EE7308T — SHEET: 1 OF 1

COPYRIGHT (PER REVISION DATE) MARATHON ELECTRIC, LLC. ALL RIGHTS RESERVED. PROPRIETARY AND CONFIDENTIAL INFORMATION - THIS DOCUMENT IS THE PROPERTY OF MARATHON ELECTRIC, LLC. ("OWNER") AND CONTAINS OWNER'S PROPRIETARY INFORMATION. ANY PERSON, CORPORATION OR OTHER FIRM RECEIVING IT IS DEEMED, BY RECEIVING IT, TO AGREE THAT IT, AND/OR ANY PART OF IT, SHALL NOT BE DISCLOSED TO ANY PERSON, CORPORATION OR OTHER ENTITY, DUPLICATED, AND/OR USED, EXCEPT AS EXPRESSLY APPROVED IN WRITING IN ADVANCE BY OWNER. THIS DOCUMENT SHALL BE RETURNED TO OWNER UPON REQUEST. IT MAY BE SUBJECT TO CERTAIN RESTRICTIONS UNDER APPLICABLE EXPORT CONTROL LAWS AND REGULATIONS.

Data Sheet

Date: 11/17/2021
Customer:
Attention:
Submitted by:

marathon® Motors

286THFCD8038

Submittal

Data @ 460 V

Motor Load Data

Load	0%	25%	50%	75%	100%	115%	125%	LR	
Current (Amps)	15.5	17.0	22.0	28.0	35.3	40.0	43.0	303	
Torque (ft-lb)	0.00	22.0	44.0	66.0	88.6	102	111	146	
RPM	1800	1794	1788	1782	1776	1,772	1769	0	
Efficiency (%)		89.4	93.1	93.7	93.6	93.2	92.9		
P.F. (%)	4.6	45.5	68.9	79.9	85.0	86.6	87.3	32.8	

Motor Speed Data

	LR	Pull-Up	BD	Rated	Idle
Speed (RPM)	0	888	1566	1776	1800
Current (Amps)	303	273	192	35.3	15.5
Torque (ft-lb)	146	124	333	88.6	0.00

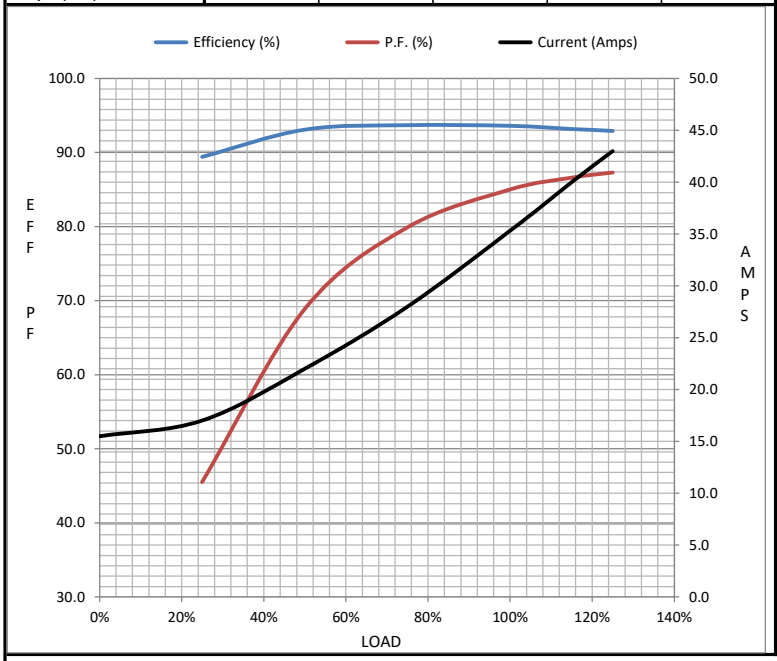

Information Block

HP	30.0	
Sync. RPM	1800	
Frame	286	
Enclosure	TEBC-AXIAL	
Construction	TFS	
Voltage	230/460	V
Frequency	60	Hz
Design	INV	
LR Code letter	K	
Service Factor	1.15	
Temp Rise @ FL	63	° C
Duty	CONT	
Ambient	40	° C
Elevation	3,300	feet
Rotor/Shaft wk²	4.78	Lb-Ft²
Ref Wdg	HA31804026 NONE	
Sound Pressure @ 1M	62	dBA
VFD Rating	CONSTANT 2000:1	
Outline Dwg	SS621113-200	
Conn. Diag	EE7308T	

Additional Specifications:

0

0

EQUIV CKT (OHMS / PHASE)

R1	R2	X1	X2	Xm
0.1550	0.1070	0.6710	0.6050	17.5770

Speed -Torque Curve

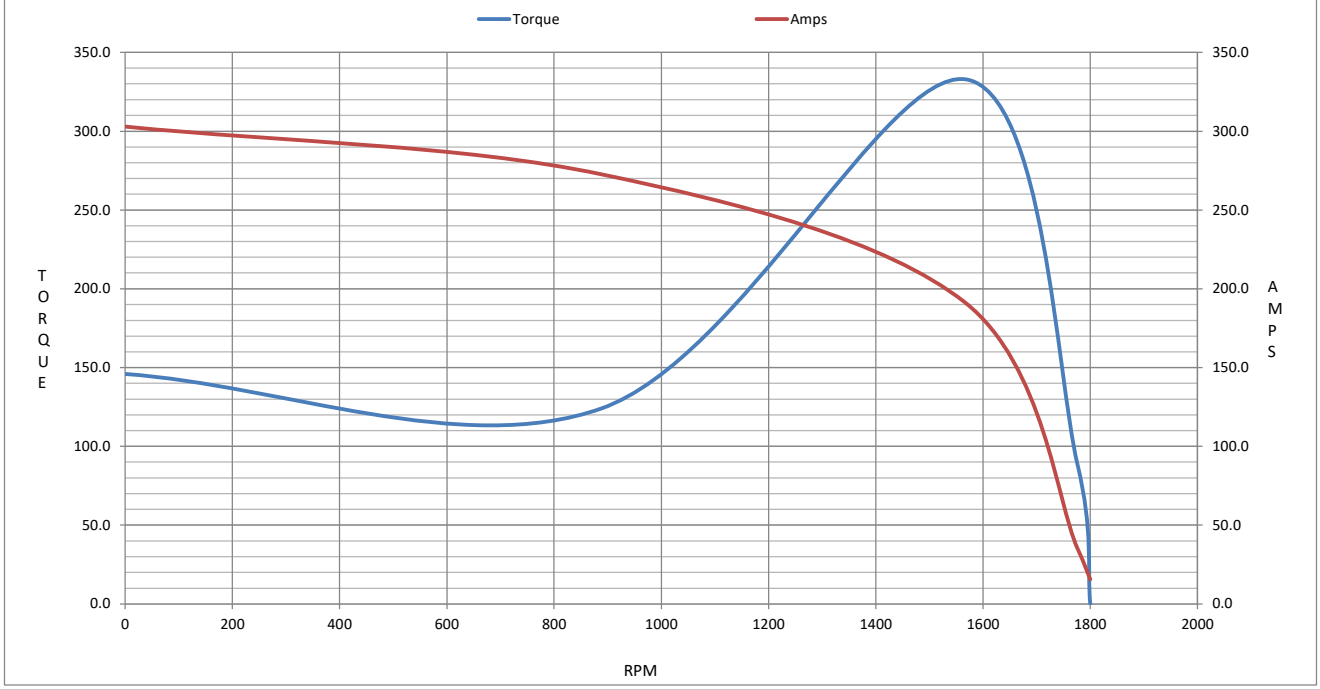

P.O. BOX 8003
WAUSAU, WI 54401-8003
PH. 715-675-3311

marathon® Motors

DATA VOLTS: 460

CERTIFICATION DATA SHEET

CUSTOMER:
ORDER #:
CONN. DIAGRAM: EE7308T
OUTLINE: SS621113-200
WINDING: HA31804026 NONE 2
SPEED:

CUSTOMER P.O. #:
REFERENCE MODEL #: 286THFCD8038
CAT #: Y512A
CUSTOMER PART #:
MOUNTING: F1/F2 CAPABLE

TYPICAL MOTOR PERFORMANCE DATA

HP	KW	SYNC RPM	FL RPM	FRAME	ENCLOSURE	TYPE	KVA CODE	DESIGN
30	22.4	1800	1776	286TC	TEBC-AXIAL	TFS	K	INV

PH	HZ	VOLTS	AMPS	START TYPE	DUTY	INSL	S.F.	AMB	ELEV.
3	60	230/460	70.5/35.5	INVERTER ONLY	CONT	H	1.15	40	3300

F.L. EFF	93.6	3/4 LD EFF	93.7	1/2 LD EFF	93.1	GTD EFF	ELECT. TYPE
F.L. PF	85.0	3/4 LD PF	79.9	1/2 LD PF	68.9	93.0	SQ CAGE INV DUTY

F.L. TORQUE	LR AMPS @ 460 V	L.R. TORQUE	B.D. TORQUE	F.L. RISE (° C)	
88.6 LB-FT	303	146 LB-FT 165%	333 LB-FT 376%	63	

SOUND PRESSURE @ 3 FT.	SOUND POWER	ROTOR WK²	MAX. LOAD WK²	SAFE STALL TIME	STARTS/HOUR	APROX. MOTOR WGT
62 dBA	71 dBA	4.78 LB-FT²	40 LB-FT²	25 SEC.	2	452 LB.

*** SUPPLEMENTAL INFORMATION ***

DE BRACKET TYPE	ODE BRACKET TYPE	MOUNT TYPE	MOTOR ORIENTATION	SEVERE DUTY	HAZARDOUS LOCATION	DRIP COVER	SCREENS	PAINT
C-FACE	ENCODER	RIGID	HORIZONTAL	NO	NONE	NO	NONE	BLUE (ENAMEL)

BEARINGS DE	BEARINGS ODE	GREASE	SHAFT TYPE	SPECIAL DE	SPECIAL ODE	SHAFT MATERIAL	FRAME MATERIAL
BALL	BALL	POLYREX EM	T	NONE	NONE	1045 HOT ROLLED (C-204)	CAST IRON
6311	6211						

THERMOSTATS	PROTECTORS	WDG RTD's	BRG RTD's	THERMISTORS	CONTROL	SPACE HEATERS
TSTATS (N/C)	NOT	NONE	NONE	NONE	FALSE	NA

R1 (ohms/ph)	R2 (ohms/ph)	X1 (ohms/ph)	X2 (ohms/ph)	Xm (ohms/ph)	VIBRATION (in/sec)	FLOAT
0.155	0.107	0.671	0.605	17.577	0.150	ODE

* NOTES *

INVERTER TORQUE: CONSTANT 2000:1
INV. HP SPEED RANGE: 1.5 X BASE SPEED

ENCODER: NONE
NONE
NONE NONE PPR

BRAKE: NONE
NONE NONE
FT-LB: NA
VOLTAGE: NONE HZ:

UL: V-INS, CONST, OVERHEAT PRT DEV UL REC

PREPARED BY:
DATE: 11/17/2021

FORM: 3531 REV_4 2/27/06