marathon®

Kiln Duty Motors

Model No: 284TTTCD18101
Catalog No: S567A

Kiln Duty Motor, 10 HP, 3 Ph, 60 Hz, 575 V, 900 RPM, 284T Frame, TEAO

©2026 Marathon, All Rights Reserved.

marathon®

Product Information Packet: Model No: 284TTTCD18101, Catalog No: S567A Kiln Duty Motor, 10 HP, 3 Ph, 60 Hz, 575 V, 900 RPM, 284T Frame, TEAO

Nameplate Specifications

Phase	**3**	Output HP	**10 Hp**
Output KW	**7.5 kW**	Voltage	**575 V**
Speed	**880 r/min**	Synchronous RPM	**900 r/min**
Service Factor	**1.15**	Frame	**284T**
Enclosure	**Totally Enclosed Air Over**	Thermal Protection	**Thermostat**
Efficiency	**88.5 %**	Ambient Temperature	**90 °C**
Frequency	**60 Hz**	Current	**11.0 A**
Power Factor	**75**	Duty	**Continuous**
Insulation Class	**H**	Design Code	**B**
KVA Code	**H**	Drive End Bearing Size	**6311**
Opp Drive End Bearing Size	**6211**	UL	**Recognized**
CSA	**Y**	CE	**Y**
IP Code	**55**	Number of Speeds	**1**

Technical Specifications

Electrical Type	**Squirrel Cage Inverter Rated**	Starting Method	**Line Or Inverter**
Poles	**8**	Rotation	**Reversible**
Resistance Main	**1.3739 O**	Mounting	**Rigid Base**
Motor Orientation	**Horizontal**	Drive End Bearing	**Ball / Heat Stabilized**
Opp Drive End Bearing	**Ball / Heat Stabilized**	Frame Material	**Cast Iron**
Shaft Type	**T**	Assembly/Box Mounting	**F1/F2 Capable**
Inverter Load	**Variable 20:1**		

Drawings

Connection Drawing	**EE7300T**	Outline Drawing	**SS620956-100**

This is an uncontrolled document once printed or downloaded and is subject to change without notice. Date Created: 15/10/2026

DASH NO.	B	C	E	2E	2F	2FF	BA	BS	MOUNTING	FRAME
100	10.83	23.34	5.50	11.00	---	9.50	4.75	4.75	F1 OR F2	284T
200	12.68	24.84			9.50	11.00		5.50		284/286T

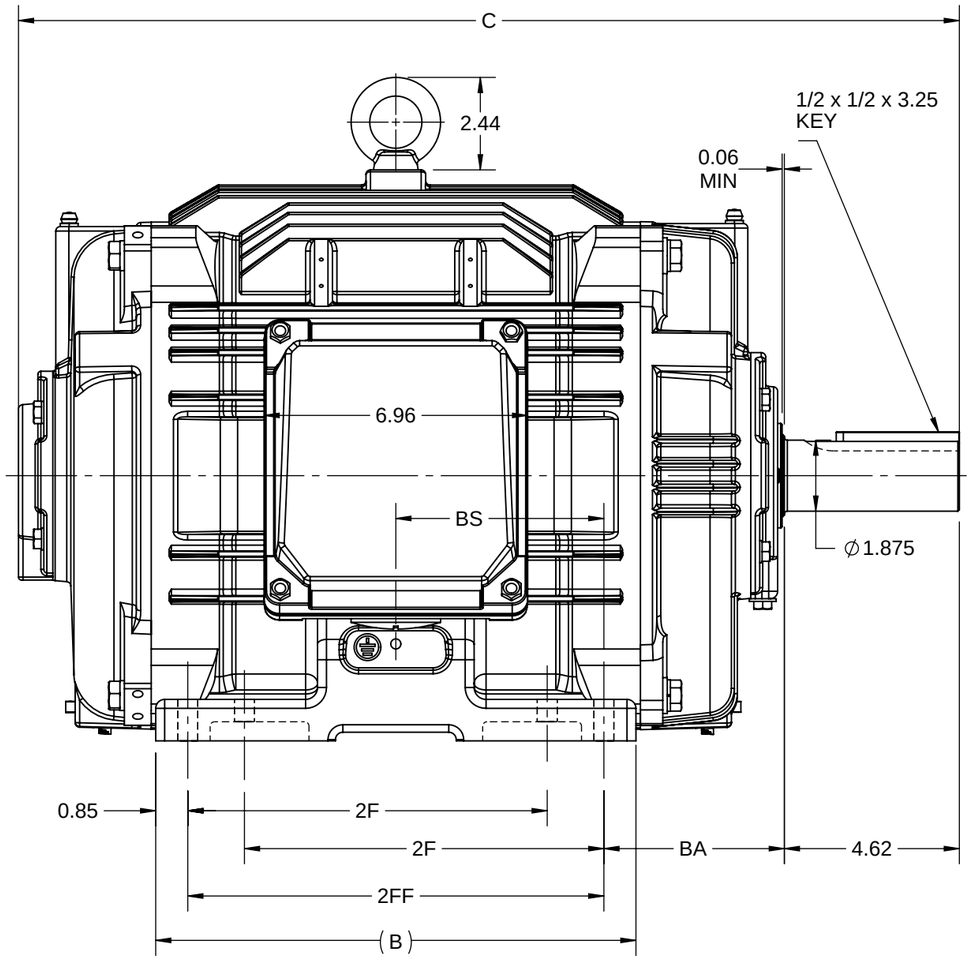

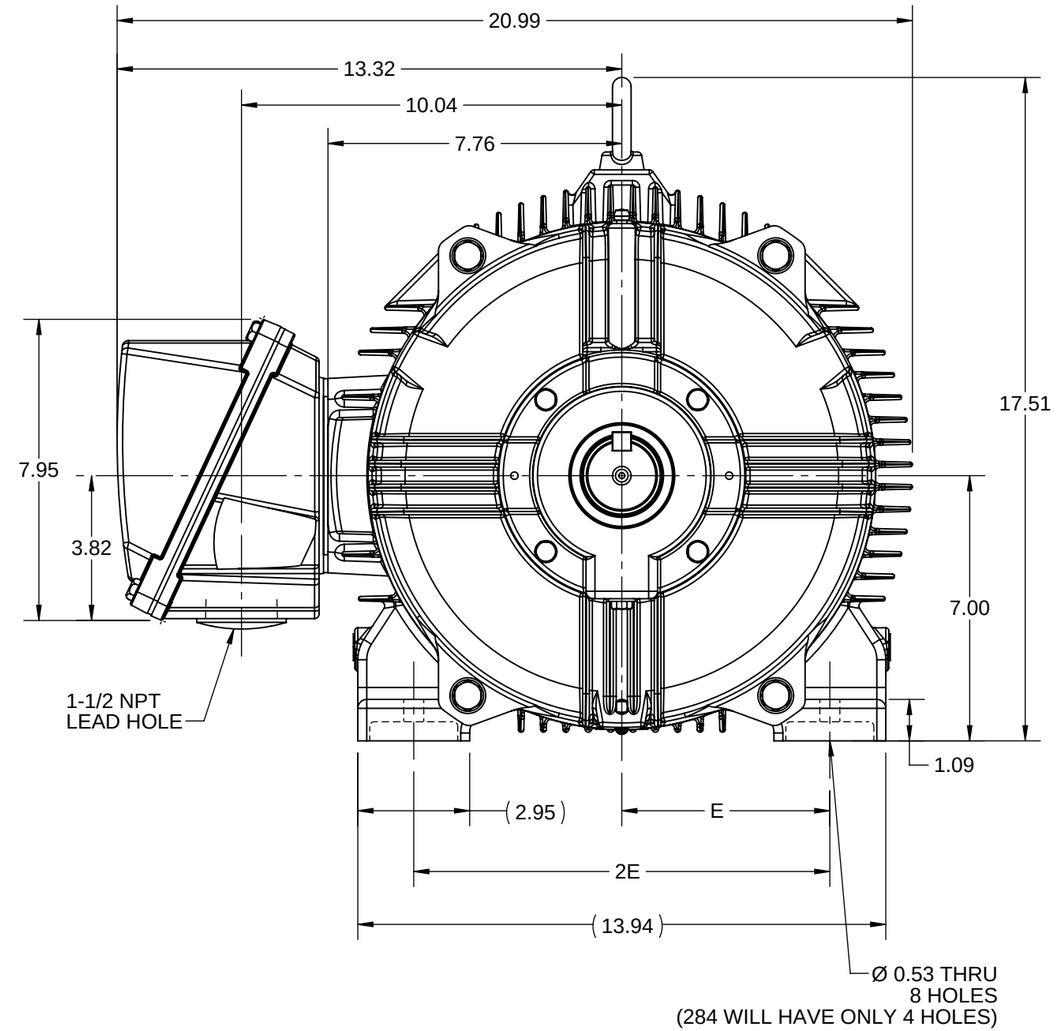

F2 VIEW

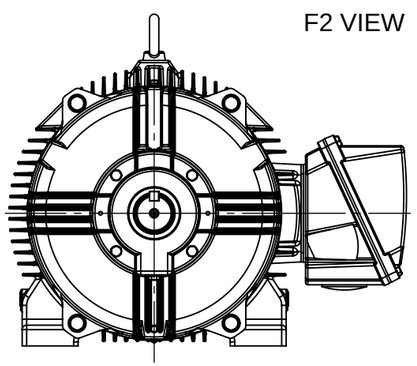

DRAWING REVISION C	REVISION BY SB	REV DATE/© DATE 05/20/2026
REQUEST NUMBER CR-0026330	APPROVED BY RMS	DATE 05/20/2026
REQUEST NUMBER DESCRIPTION DRAWING TITLE BLOCK UPDATED		

COPYRIGHT (PER REVISION DATE) MARATHON ELECTRIC, LLC. ALL RIGHTS RESERVED. PROPRIETARY AND CONFIDENTIAL INFORMATION - THIS DOCUMENT IS THE PROPERTY OF MARATHON ELECTRIC, LLC. ("OWNER") AND CONTAINS OWNER'S PROPRIETARY INFORMATION. ANY PERSON, CORPORATION OR OTHER FIRM RECEIVING IT IS DEEMED, BY RECEIVING IT, TO AGREE THAT IT, AND/OR ANY PART OF IT, SHALL NOT BE DISCLOSED TO ANY PERSON, CORPORATION OR OTHER ENTITY, DUPLICATED, AND/OR USED, EXCEPT AS EXPRESSLY APPROVED IN WRITING IN ADVANCE BY OWNER. THIS DOCUMENT SHALL BE RETURNED TO OWNER UPON REQUEST. IT MAY BE SUBJECT TO CERTAIN RESTRICTIONS UNDER APPLICABLE EXPORT CONTROL LAWS AND REGULATIONS.

PRIMARY DIMENSIONS ARE INCH
mm DIMENSIONS IN [BRACKETS]
ARE FOR REFERENCE ONLY

DRAWN BY	SAI
DATE	24/01/2020
APPROVED BY	SBD
DATE	24/01/2020
REFERENCE	
THIRD ANGLE PROJECTION	

marathon™

DESCRIPTION
OUTLINE
284/286T FR-NEMA-TEAO/TENV

MATERIAL	PROCESS/FINISH

SIZE	DRAWING NUMBER	SHEET
B	SS620956	1 OF 1

THREE PHASE - SINGLE VOLTAGE
MOTOR - CONDUIT BOX @ 'A'

TO REVERSE ROTATION:
INTERCHANGE ANY TWO LINE
LEAD CONNECTIONS

NOTE FOR FACTORY USE ONLY:
TO SURGE TEST:
FOR 3 LEAD COMMON CONNECT:
CONNECT P1 TO T1 THEN P2 TO L1
FOR 6 LEAD COMMON CONNECT:
CONNECT P1 TO BOTH T1
THEN P2 TO L1

TERMINIAL BLOCK WHEN SPECIFIED

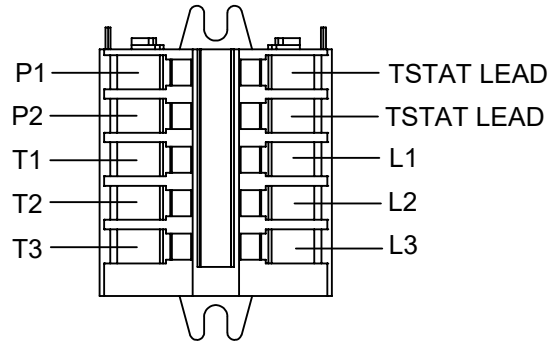

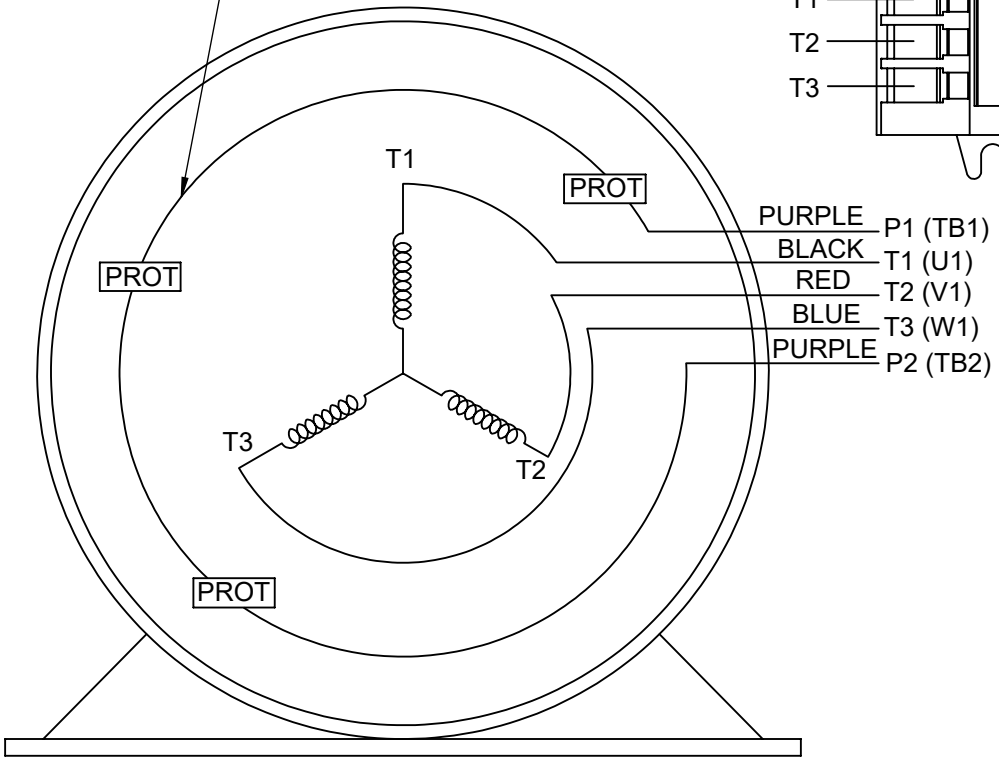

VIEW OF TERMINAL END

T2BM
T6AW
T6AL
T6Z
T4EG
T4BF
T8A
T6H
T6A
T4AX
T4A
T2A
T2F

IF MOTOR HAS MULTIPLE
T'S PER LEAD CONNECT
TOGETHER LIKE T'S

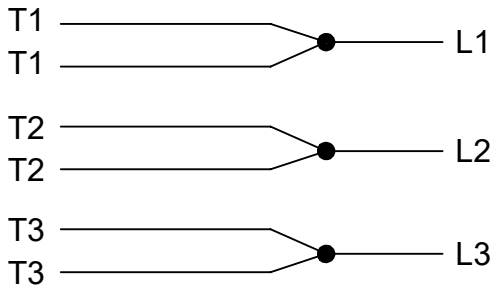

A-9806 DECAL

DRAWING REVISION AC	REVISION BY SB	REV DATE/© DATE 08/01/2025	PRIMARY DIMENSIONS ARE INCH mm DIMENSIONS IN [BRACKETS] ARE FOR REFERENCE ONLY	DRAWN BY LZ	marathon™
REQUEST NUMBER CR-0023654	APPROVED BY SBD	DATE 08/01/2025		DATE 01-04-1994	
REQUEST NUMBER DESCRIPTION DRAWING TITLE BLOCK UPDATED				APPROVED BY GK	DESCRIPTION CONN DIAGRAM-EXTERNAL 3Ø-SINGLE VOLT-MOTOR WITH PROTECTOR
				DATE 01-20-1994	
				REFERENCE	MATERIAL / PROCESS/FINISH
				THIRD ANGLE PROJECTION	SIZE A / DRAWING NUMBER EE7300T / SHEET 1 OF 1

COPYRIGHT (PER REVISION DATE) MARATHON ELECTRIC, LLC. ALL RIGHTS RESERVED. PROPRIETARY AND CONFIDENTIAL INFORMATION - THIS DOCUMENT IS THE PROPERTY OF MARATHON ELECTRIC, LLC. ("OWNER") AND CONTAINS OWNER'S PROPRIETARY INFORMATION. ANY PERSON, CORPORATION OR OTHER FIRM RECEIVING IT IS DEEMED, BY RECEIVING IT, TO AGREE THAT IT, AND/OR ANY PART OF IT, SHALL NOT BE DISCLOSED TO ANY PERSON, CORPORATION OR OTHER ENTITY, DUPLICATED, AND/OR USED, EXCEPT AS EXPRESSLY APPROVED IN WRITING IN ADVANCE BY OWNER. THIS DOCUMENT SHALL BE RETURNED TO OWNER UPON REQUEST. IT MAY BE SUBJECT TO CERTAIN RESTRICTIONS UNDER APPLICABLE EXPORT CONTROL LAWS AND REGULATIONS.