marathon®

Multispeed Motors

Model No: 284TTDP7205
Catalog No: Y472

Multispeed Motor, 15 & 3.75 HP, 3 Ph, 60 & 60 Hz, 460 & 460 V, 1800 RPM, 284T Frame, DP

©2026 Marathon, All Rights Reserved.

marathon®

Product Information Packet: Model No: 284TTDP7205, Catalog No: Y472 Multispeed Motor, 15 & 3.75 HP, 3 Ph, 60 & 60 Hz, 460 & 460 V, 1800 RPM, 284T Frame, DP

Nameplate Specifications

Phase	**3**	Output HP	**15 & 3.75 Hp**
Output KW	**11.2 & 2.8 kW**	Voltage	**460 & 460 V**
Speed	**1775 & 885 r/min**	Synchronous RPM	**1800 & 900 r/min**
Service Factor	**1.15 & 1.15**	Frame	**284T**
Enclosure	**Drip Proof**	Thermal Protection	**No Protection**
Efficiency	**88.5 & 81 %**	Ambient Temperature	**40 °C**
Frequency	**60 & 60 Hz**	Current	**18 & 6.5 A**
Power Factor	**88**	Duty	**Continuous**
Insulation Class	**B**	Design Code	**2VT**
KVA Code	**G**	Drive End Bearing Size	**6311**
Opp Drive End Bearing Size	**6210**	UL	**Recognized**
CSA	**Y**	CE	**Y**
IP Code	**12**	Number of Speeds	**2**

Technical Specifications

Electrical Type	**Squirrel Cage Induction Run**	Starting Method	**Across The Line**
Poles	**4//8**	Rotation	**Reversible**
Resistance Main	**1.055 O**	Mounting	**Rigid Base**
Motor Orientation	**Horizontal**	Drive End Bearing	**Ball**
Opp Drive End Bearing	**Ball**	Frame Material	**Cast Iron**
Shaft Type	**T**	Overall Length	**23.49 in**
Frame Length	**12.75 in**	Shaft Diameter	**1 7/8 in**
Shaft Extension	**4.82 in**	Assembly/Box Mounting	**F1/F2 Capable**

Drawings

Connection Drawing	**A-EE7317**	Outline Drawing	**B-SS200030-1275**

This is an uncontrolled document once printed or downloaded and is subject to change without notice. Date Created: 16/10/2026

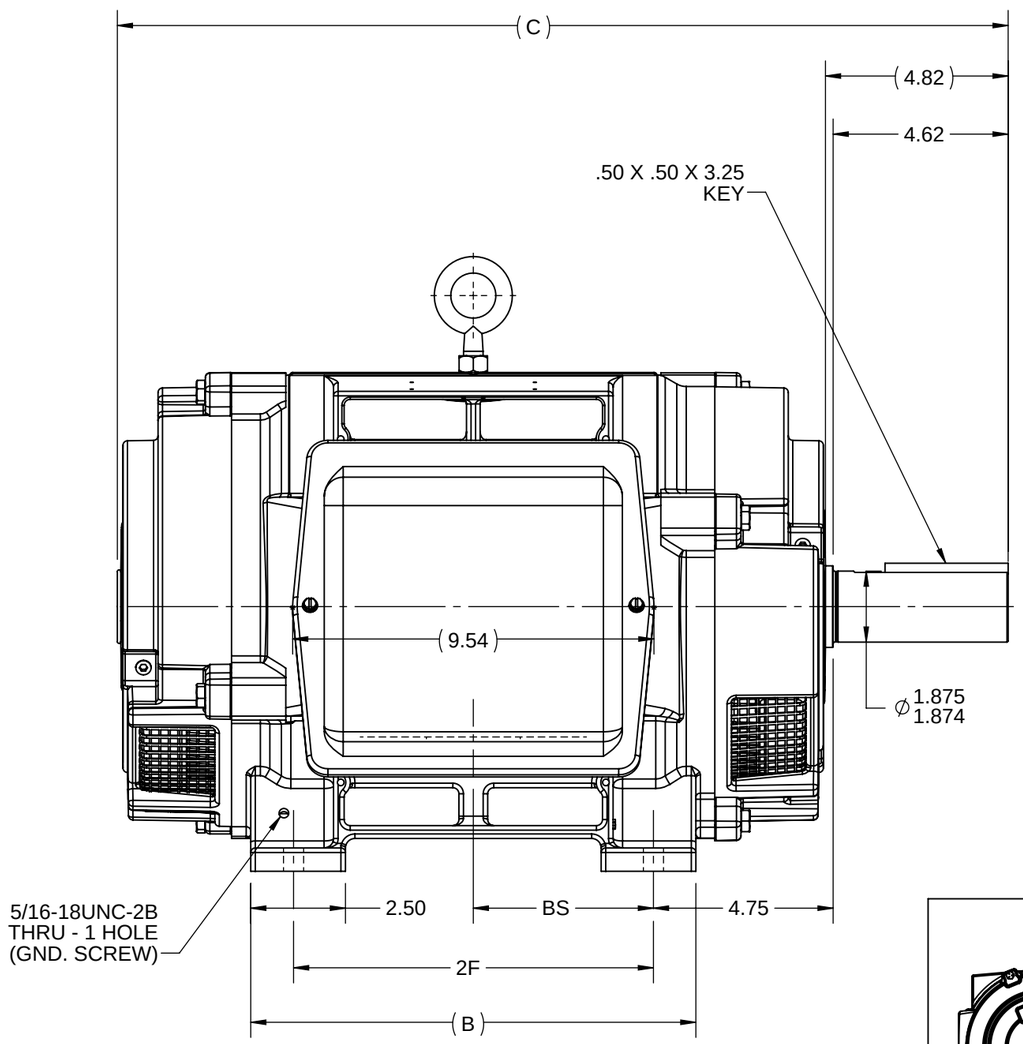

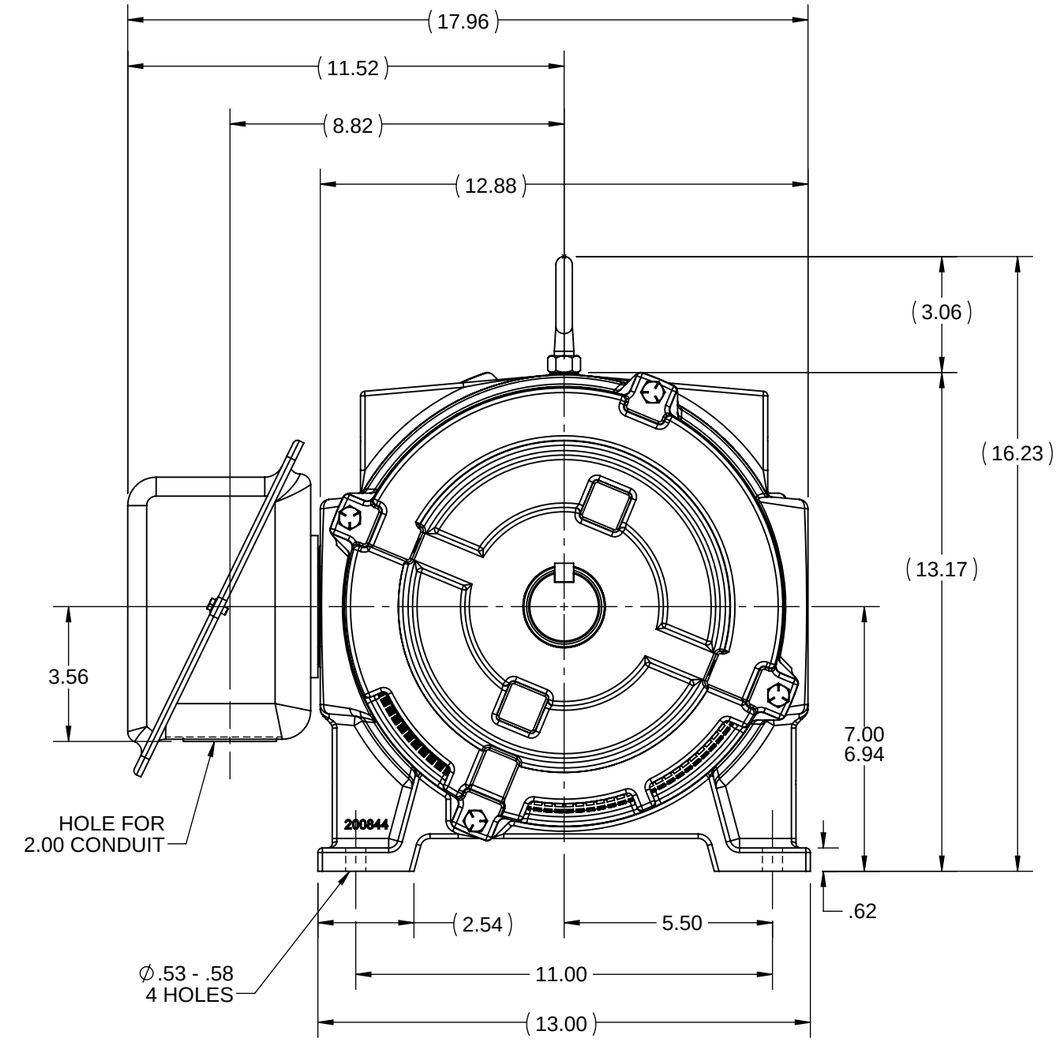

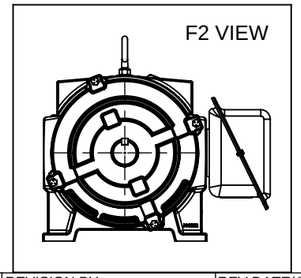

NOTES
1. BOX CAN BE ROTATED IN 90° STEPS
2. BOX CAN BE MOUNTED ON OPPOSITE SIDE BY REMOVING BRACKETS AND TURNING FRAME 180°
3. NAMEPLATE TO BE READ FROM CONDUIT BOX SIDE OF MOTOR.

DASH	FRAME	B	C	2F	BS
1275	284T	11.75	23.49	9.50	4.75
1425	286T	13.25	24.99	11.00	5.50

DRAWING REVISION	REVISION BY	REV DATE/© DATE
R	BISWA	20/05/2026
REQUEST NUMBER	APPROVED BY	DATE
CR-0026330	RMS	20/05/2026

REQUEST NUMBER DESCRIPTION
DRAWING TITTLE BLOCK UPDATED

COPYRIGHT (PER REVISION DATE) MARATHON ELECTRIC, LLC. ALL RIGHTS RESERVED. PROPRIETARY AND CONFIDENTIAL INFORMATION - THIS DOCUMENT IS THE PROPERTY OF MARATHON ELECTRIC, LLC. ("OWNER") AND CONTAINS OWNER'S PROPRIETARY INFORMATION. ANY PERSON, CORPORATION OR OTHER FIRM RECEIVING IT IS DEEMED, BY RECEIVING IT, TO AGREE THAT IT, AND/OR ANY PART OF IT, SHALL NOT BE DISCLOSED TO ANY PERSON, CORPORATION OR OTHER ENTITY, DUPLICATED, AND/OR USED, EXCEPT AS EXPRESSLY APPROVED IN WRITING IN ADVANCE BY OWNER. THIS DOCUMENT SHALL BE RETURNED TO OWNER UPON REQUEST. IT MAY BE SUBJECT TO CERTAIN RESTRICTIONS UNDER APPLICABLE EXPORT CONTROL LAWS AND REGULATIONS.

TOLERANCES (EXCEPT AS NOTED):

DEC.	INCH	mm	ANGLE
.X	±0.1	[±3]	±7' 30"
.XX	±0.03	[±0.8]	
.XXX	±0.005	[±0.13]	
.XXXX	±0.0005	[±0.013]	

REMOVE BURRS & BREAK SHARP EDGES: .003/.015 [.08/.38] X 45°
CORNER FILLETS: R.02 [.5]
MACHINED SURFACES: 200 INCH / 5.1 mm
mm DIMENSIONS IN [BRACKETS] ARE FOR REFERENCE ONLY

DRAWN BY	JL
DATE	11-17-1987
APPROVED BY	LS
DATE	11-25-1987
REFERENCE	
THIRD ANGLE PROJECTION	

marathon™

DESCRIPTION
OUTLINE
DR. PR. - CAST IRON - 280T FR. - TS

MATERIAL | PROCESS/FINISH

SIZE B | DRAWING NUMBER SS200030 | SHEET 1 OF 1

LOW SPEED

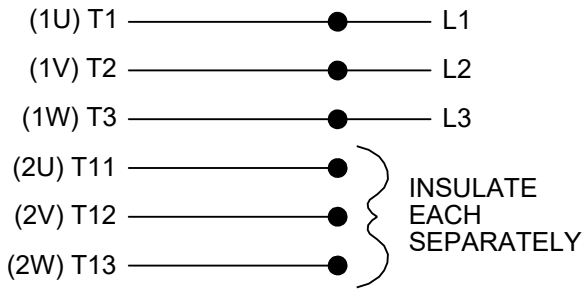

HIGHSPEED

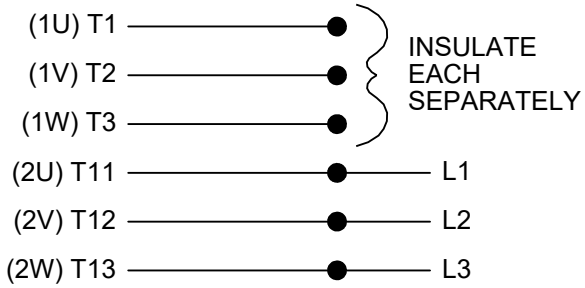

TO REVERSE ROTATION ON EITHER SPEED: INTERCHANGE ANY 2 LEADS ON THE WINDING IN USE.

THREE PHASE, SINGLE VOLT, 6 LEAD 2 SPEED REVERSIBLE MOTOR

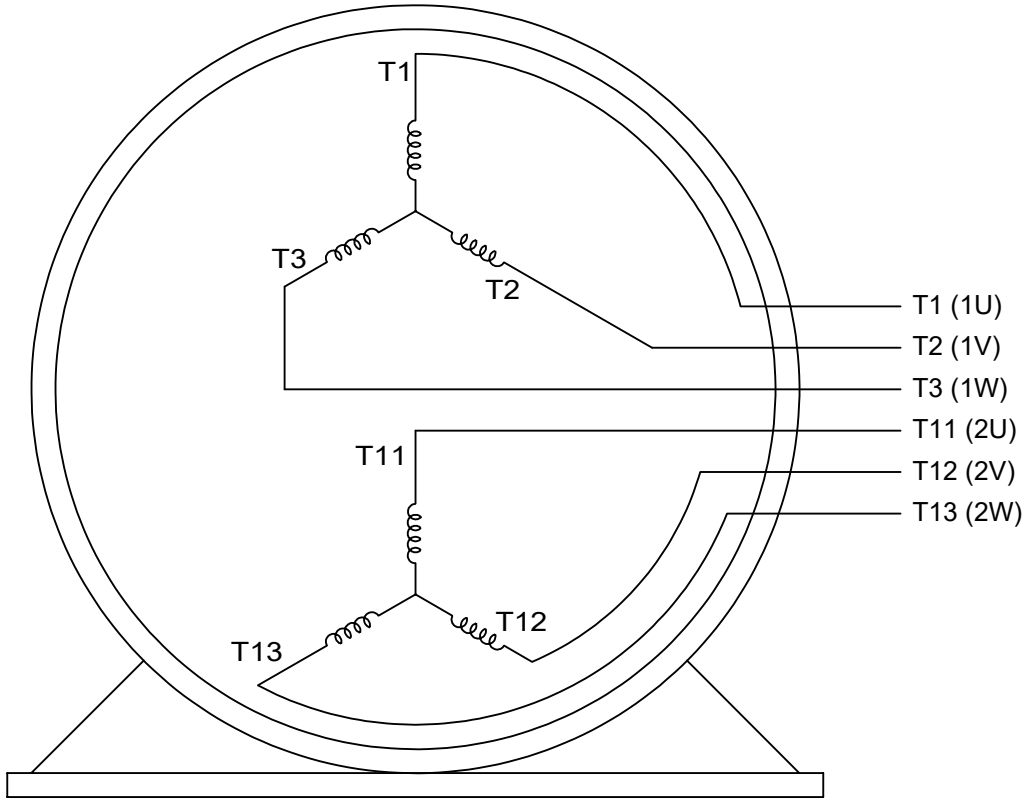

VIEW OF TERMINAL END

DRAWING REVISION D	REVISION BY SB	REV DATE/© DATE 10/08/2025	PRIMARY DIMENSIONS ARE INCH mm DIMENSIONS IN [BRACKETS] ARE FOR REFERENCE ONLY	DRAWN BY LZ	marathon™
REQUEST NUMBER CR-0024284	APPROVED BY RMS	DATE 10/08/2025		DATE 01-05-1994	
REQUEST NUMBER DESCRIPTION DRAWING TITLE BLOCK UPDATED				APPROVED BY GK	DESCRIPTION CONN DIAGRAM-INTERNAL 3 PHASE - SINGLE - 2 SPEED REVERSIBLE
				DATE 01-17-1994	
				REFERENCE	MATERIAL / PROCESS/FINISH
				THIRD ANGLE PROJECTION	SIZE A / DRAWING NUMBER EE7317 / SHEET 1 OF 1

COPYRIGHT (PER REVISION DATE) MARATHON ELECTRIC, LLC. ALL RIGHTS RESERVED. PROPRIETARY AND CONFIDENTIAL INFORMATION - THIS DOCUMENT IS THE PROPERTY OF MARATHON ELECTRIC, LLC. ("OWNER") AND CONTAINS OWNER'S PROPRIETARY INFORMATION. ANY PERSON, CORPORATION OR OTHER FIRM RECEIVING IT IS DEEMED, BY RECEIVING IT, TO AGREE THAT IT, AND/OR ANY PART OF IT, SHALL NOT BE DISCLOSED TO ANY PERSON, CORPORATION OR OTHER ENTITY, DUPLICATED, AND/OR USED, EXCEPT AS EXPRESSLY APPROVED IN WRITING IN ADVANCE BY OWNER. THIS DOCUMENT SHALL BE RETURNED TO OWNER UPON REQUEST. IT MAY BE SUBJECT TO CERTAIN RESTRICTIONS UNDER APPLICABLE EXPORT CONTROL LAWS AND REGULATIONS.

Uncontrolled Copy

CERTIFICATION DATA SHEET

Model#:	284TTDP7205 BE	**WINDING#:**	256(4-8)65 NONE 2
CONN. DIAGRAM:	A-EE7317	**ASSEMBLY:**	F1/F2 CAPABLE
OUTLINE:	B-SS200030-1275		

TYPICAL MOTOR PERFORMANCE DATA

HP	KW	SYNC. RPM	F.L. RPM	FRAME	ENCLOSURE	KVA CODE	DESIGN
15&3 3/4	11.2&2.8	900	1775&885	284T	DP	G	2VT

PH	Hz	VOLTS	FL AMPS	START TYPE	DUTY	INSL	S.F	AMB°C	ELEVATION
3	60/60	460	18&6.5	ACROSS THE LINE	CONTINUOUS	B3	1.15/1.15	40	3300

FULL LOAD EFF: 88.5&81	3/4 LOAD EFF: 80	1/2 LOAD EFF: 77	GTD. EFF	ELEC. TYPE	NO LOAD AMPS
FULL LOAD PF: 88&68	3/4 LOAD PF: 60	1/2 LOAD PF: 47	77.2	SQ CAGE IND RUN	4

F.L. TORQUE	LOCKED ROTOR AMPS	L.R. TORQUE	B.D. TORQUE	F.L. RISE°C
22.5 LB-FT	34	44 LB-FT 196	62 LB-FT 276	47

SOUND PRESSURE @ 3 FT.	SOUND POWER	ROTOR WK^2	MAX. WK^2	SAFE STALL TIME	STARTS /HOUR	APPROX. MOTOR WGT
63 dBA	73 dBA	2.2 LB-FT^2	- LB-FT^2	- SEC.	-	310 LBS.

*** SUPPLEMENTAL INFORMATION ***

DE BRACKET TYPE	ODE BRACKET TYPE	MOUNT TYPE	ORIENTATION	SEVERE DUTY	HAZARDOUS LOCATION	DRIP COVER	SCREENS	PAINT
STANDARD	STANDARD	RIGID	HORIZONTAL	FALSE	NONE	FALSE	NONE	GREEN (ENAMEL)

BEARINGS		GREASE	SHAFT TYPE	SPECIAL DE	SPECIAL ODE	SHAFT MATERIAL	FRAME MATERIAL
DE	OPE						
BALL	BALL	POLYREX EM	T	NONE	NONE	1045 HOT ROLLED (C-204)	CAST IRON
6311	6210						

THERMO-PROTECTORS				THERMISTORS	CONTROL	SPACE /n HEATERS
THERMOSTATS	PROTECTORS	WDG RTDs	BRG RTDs			
NONE	NOT	NONE	NONE	NONE	FALSE	NONE VOLTS

If Inverter equals NONE, contact factory for further information

INVERTER TORQUE: NONE
INV. HP SPEED RANGE: NONE

ENCODER: NONE
NONE NONE
NONE NONE PPR

BRAKE: NONE NONE
NONE P/N NONE
NONE NONE
NONE FT-LB NONE V NONE Hz

*
N
O
T
E
S
*

DATE: 06/27/2017 12:52:02 AM
FORM 3531 REV.3 02/07/99
** Subject to change without notice.