marathon®

Inverter (Vector) Duty Motors

Model No: 284THTCD7036
Catalog No: Y567A

Inverter (Vector) Duty Motor, 25 HP, 3 Ph, 60 Hz, 575 V, 1800 RPM, 284TC Frame, TENV

©2026 Marathon, All Rights Reserved.

marathon®

Product Information Packet: Model No: 284THTCD7036, Catalog No: Y567A Inverter (Vector) Duty Motor, 25 HP, 3 Ph, 60 Hz, 575 V, 1800 RPM, 284TC Frame, TENV

Nameplate Specifications

Phase	**3**	Output HP	**25 Hp**
Output KW	**18.7 kW**	Voltage	**575 V**
Speed	**1778 r/min**	Synchronous RPM	**1800 r/min**
Service Factor	**1.00**	Frame	**284TC**
Enclosure	**Totally Enclosed Non Ventilated**	Thermal Protection	**Thermostat**
Efficiency	**93.6 %**	Ambient Temperature	**40 °C**
Frequency	**60 Hz**	Current	**23.6 A**
Power Factor	**84.8**	Duty	**Continuous**
Insulation Class	**H**	Design Code	**INV**
KVA Code	**L**	Drive End Bearing Size	**6311**
Opp Drive End Bearing Size	**6311**	UL	**Recognized**
CSA	**Y**	CE	**Y**
IP Code	**55**	Number of Speeds	**1**

Technical Specifications

Electrical Type	**Squirrel Cage Inverter Duty**	Starting Method	**Inverter Only**
Poles	**4**	Rotation	**Reversible**
Resistance Main	**.282 O**	Mounting	**Rigid Base**
Motor Orientation	**Horizontal**	Drive End Bearing	**Ball**
Opp Drive End Bearing	**Ball**	Frame Material	**Cast Iron**
Shaft Type	**T**	Shaft Diameter	**1.875 in**
Assembly/Box Mounting	**F1/F2 Capable**	Inverter Load	**Constant 1000:1**

Drawings

Connection Drawing	**EE7300T**	Outline Drawing	**SS313097-100**

This is an uncontrolled document once printed or downloaded and is subject to change without notice. Date Created: 16/10/2026

DASH NO.	B	C	E	2E	2F	2FF	AG	AH	BA	BV	MOUNTING	FRAME
100	10.83	27.00	5.50	11.00	---	9.50	22.63	4.38	4.75	9.76	F1 OR F2	284TC
200	12.68	28.50			9.50	11.00	24.13			10.48		284/286TC

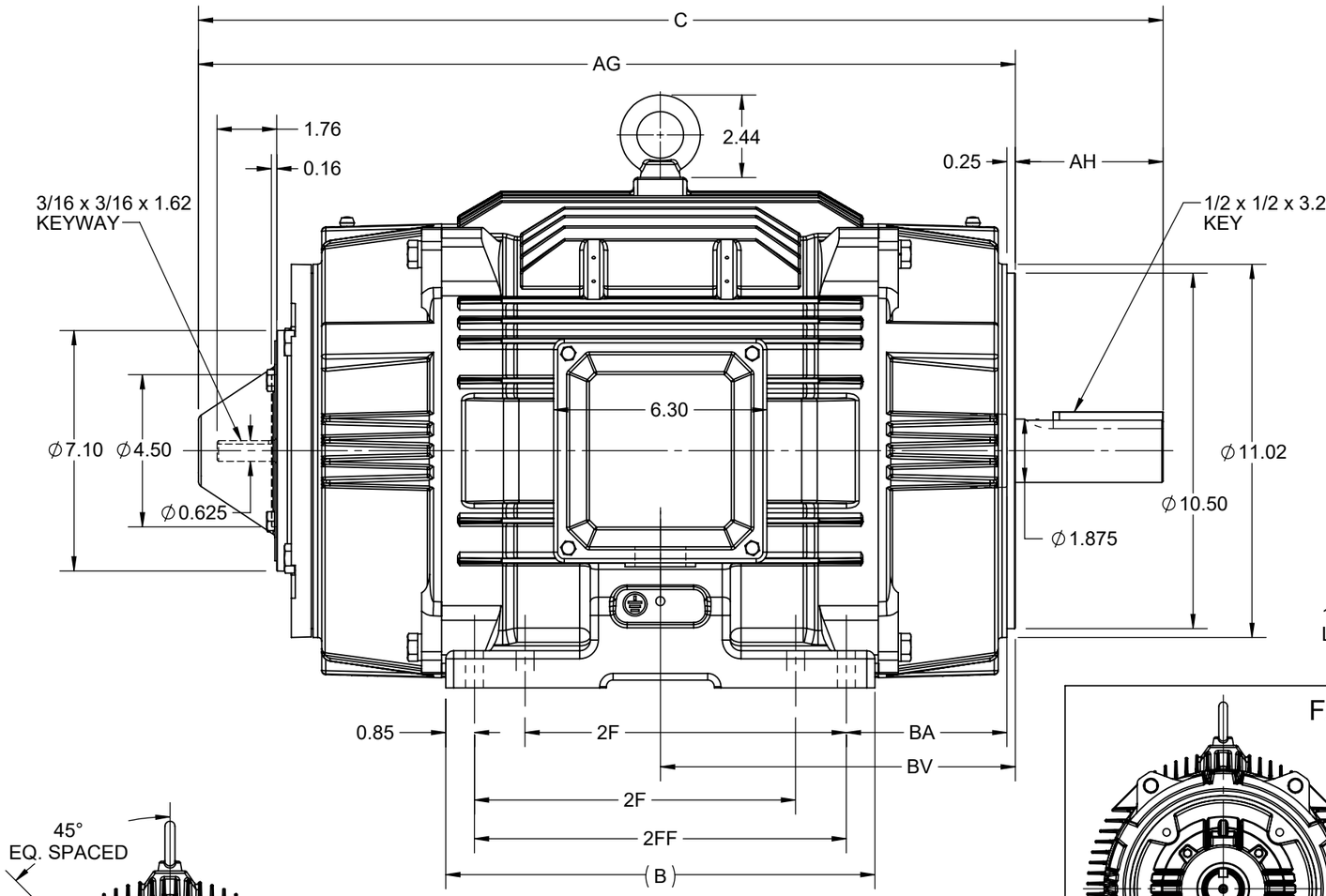

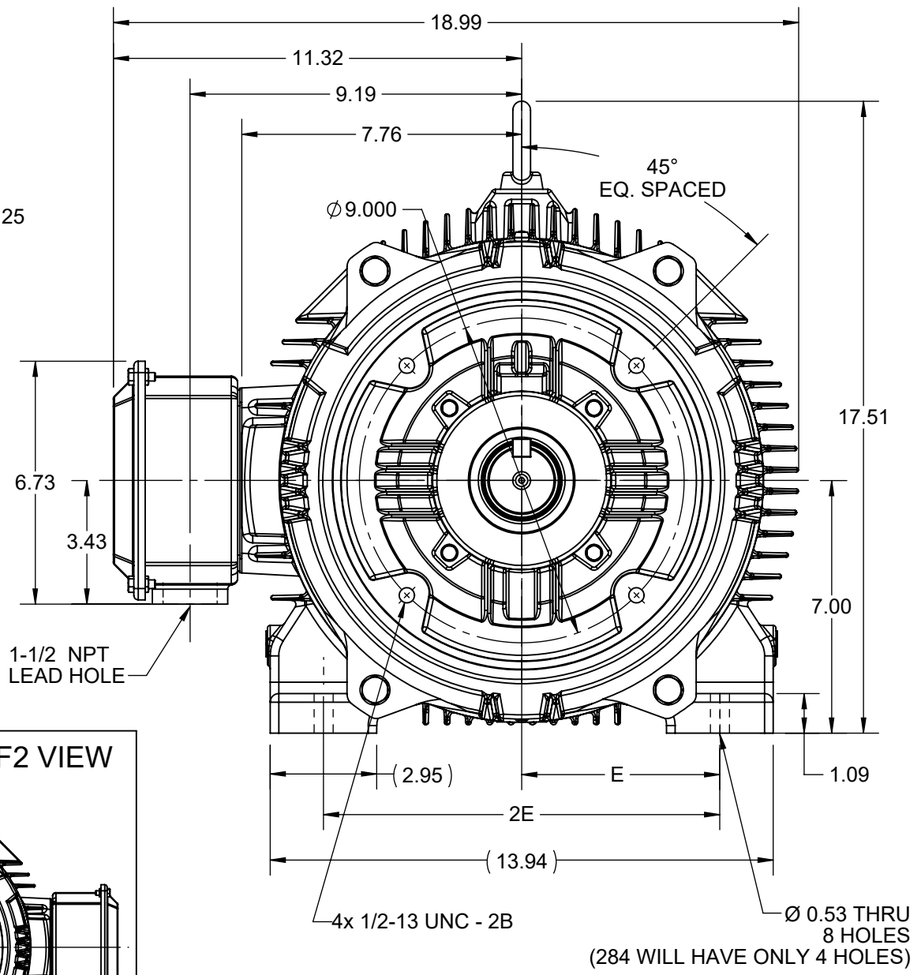

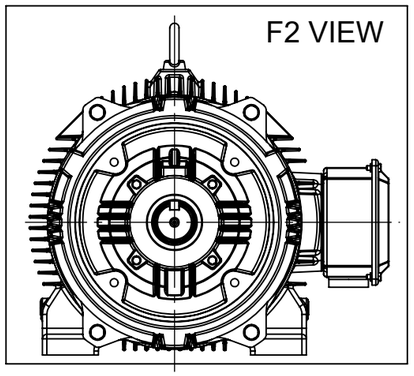

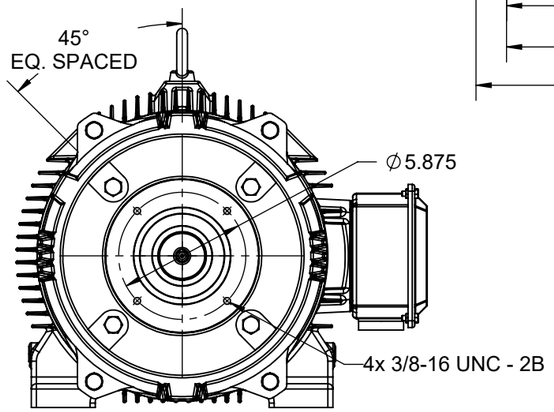

ODE VIEW
COVER REMOVED

DRAWING REVISION: E	REVISION BY: SB	REV DATE/© DATE: 07/23/2025
REQUEST NUMBER: CR-0023556	APPROVED BY: SBD	DATE: 07/23/2025
REQUEST NUMBER DESCRIPTION: DRAWING TITLE BLOCK UPDATED		

COPYRIGHT (PER REVISION DATE) MARATHON ELECTRIC, LLC. ALL RIGHTS RESERVED. PROPRIETARY AND CONFIDENTIAL INFORMATION - THIS DOCUMENT IS THE PROPERTY OF MARATHON ELECTRIC, LLC. ("OWNER") AND CONTAINS OWNER'S PROPRIETARY INFORMATION. ANY PERSON, CORPORATION OR OTHER FIRM RECEIVING IT IS DEEMED, BY RECEIVING IT, TO AGREE THAT IT, AND/OR ANY PART OF IT, SHALL NOT BE DISCLOSED TO ANY PERSON, CORPORATION OR OTHER ENTITY, DUPLICATED, AND/OR USED, EXCEPT AS EXPRESSLY APPROVED IN WRITING IN ADVANCE BY OWNER. THIS DOCUMENT SHALL BE RETURNED TO OWNER UPON REQUEST. IT MAY BE SUBJECT TO CERTAIN RESTRICTIONS UNDER APPLICABLE EXPORT CONTROL LAWS AND REGULATIONS.

PRIMARY DIMENSIONS ARE INCH
mm DIMENSIONS IN [BRACKETS]
ARE FOR REFERENCE ONLY

DRAWN BY: VS	marathon™	
DATE: 04-06-2020	DESCRIPTION: OUTLINE 284/286TC FR-NEMA-TENV-ODE 4.5AK	
APPROVED BY: SBD		
DATE: 04-06-2020		
REFERENCE	MATERIAL	PROCESS/FINISH
THIRD ANGLE PROJECTION	SIZE: B / DRAWING NUMBER: SS313097	SHEET: 1 OF 1

THREE PHASE - SINGLE VOLTAGE
MOTOR - CONDUIT BOX @ 'A'

TO REVERSE ROTATION:
INTERCHANGE ANY TWO LINE
LEAD CONNECTIONS

NOTE FOR FACTORY USE ONLY:
TO SURGE TEST:
FOR 3 LEAD COMMON CONNECT:
CONNECT P1 TO T1 THEN P2 TO L1
FOR 6 LEAD COMMON CONNECT:
CONNECT P1 TO BOTH T1
THEN P2 TO L1

TERMINIAL BLOCK WHEN SPECIFIED

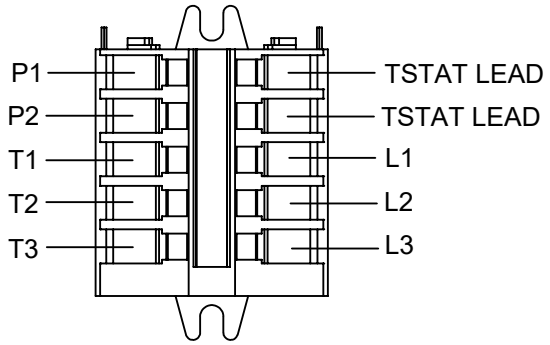

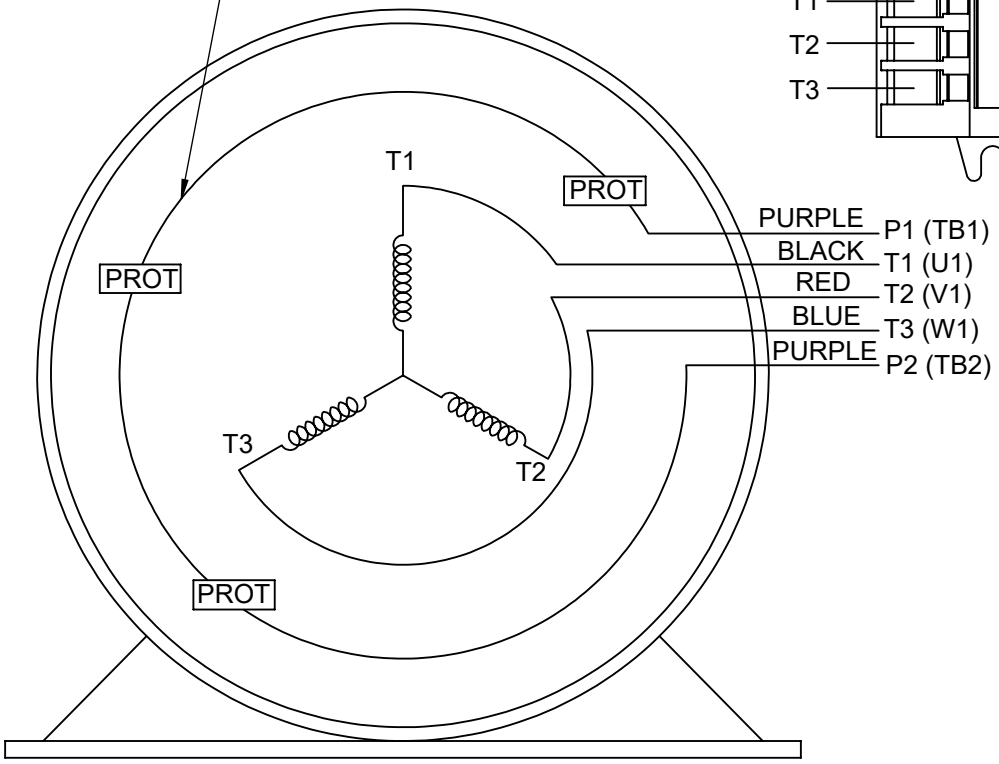

VIEW OF TERMINAL END

T2BM
T6AW
T6AL
T6Z
T4EG
T4BF
T8A
T6H
T6A
T4AX
T4A
T2A
T2F

IF MOTOR HAS MULTIPLE
T'S PER LEAD CONNECT
TOGETHER LIKE T'S

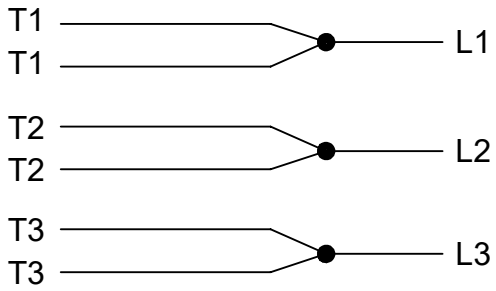

A-9806 DECAL

DRAWING REVISION AC	REVISION BY SB	REV DATE/© DATE 08/01/2025	PRIMARY DIMENSIONS ARE INCH mm DIMENSIONS IN [BRACKETS] ARE FOR REFERENCE ONLY	DRAWN BY LZ	marathon™
REQUEST NUMBER CR-0023654	APPROVED BY SBD	DATE 08/01/2025		DATE 01-04-1994	
REQUEST NUMBER DESCRIPTION DRAWING TITLE BLOCK UPDATED				APPROVED BY GK	DESCRIPTION CONN DIAGRAM-EXTERNAL 3Ø-SINGLE VOLT-MOTOR WITH PROTECTOR
				DATE 01-20-1994	
				REFERENCE	MATERIAL / PROCESS/FINISH
				THIRD ANGLE PROJECTION	SIZE A / DRAWING NUMBER EE7300T / SHEET 1 OF 1

COPYRIGHT (PER REVISION DATE) MARATHON ELECTRIC, LLC. ALL RIGHTS RESERVED. PROPRIETARY AND CONFIDENTIAL INFORMATION - THIS DOCUMENT IS THE PROPERTY OF MARATHON ELECTRIC, LLC. ("OWNER") AND CONTAINS OWNER'S PROPRIETARY INFORMATION. ANY PERSON, CORPORATION OR OTHER FIRM RECEIVING IT IS DEEMED, BY RECEIVING IT, TO AGREE THAT IT, AND/OR ANY PART OF IT, SHALL NOT BE DISCLOSED TO ANY PERSON, CORPORATION OR OTHER ENTITY, DUPLICATED, AND/OR USED, EXCEPT AS EXPRESSLY APPROVED IN WRITING IN ADVANCE BY OWNER. THIS DOCUMENT SHALL BE RETURNED TO OWNER UPON REQUEST. IT MAY BE SUBJECT TO CERTAIN RESTRICTIONS UNDER APPLICABLE EXPORT CONTROL LAWS AND REGULATIONS.

Data Sheet

Date: 11/28/2022
Customer:
Attention:
Submitted by:

marathon electric

284THTCD7036
NONE FAN
Submittal
Data @ 575 V

Motor Load Data

Load	0%	25%	50%	75%	100%	115%	125%	LR	
Current (Amps)	10.5	11.8	14.8	18.8	23.6	26.8	28.8	220	
Torque (ft-lb)	0.00	18.3	36.7	55.2	73.9	85.1	92.6	129	
RPM	1800	1795	1789	1784	1778	1,775	1772	0	
Efficiency (%)		88.7	92.8	93.7	93.6	93.4	93.1		
P.F. (%)	5.2	44.8	68.1	79.4	84.8	86.6	87.4	32.8	

Motor Speed Data

	LR	Pull-Up	BD	Rated	Idle
Speed (RPM)	0	889	1573	1778	1800
Current (Amps)	220	198	138	23.6	10.5
Torque (ft-lb)	129	110	289	73.9	0.00

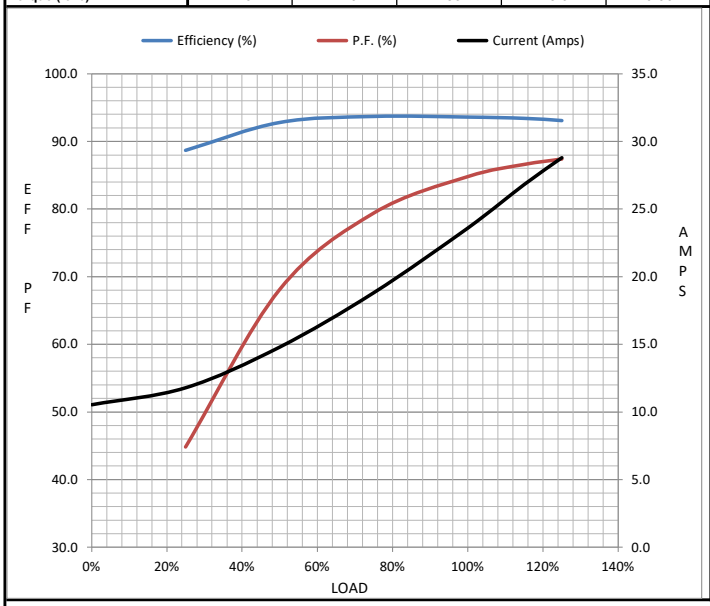

Information Block

HP	25.0
Sync. RPM	1800
Frame	284
Enclosure	TENV
Construction	TTC
Voltage	575 V
Frequency	60 Hz
Design	A
LR Code letter	L
Service Factor	1
Temp Rise @ FL	105 ° C
Duty	CONT
Ambient	40 ° C
Elevation	1,000 feet
Rotor/Shaft wk²	4.8 Lb-Ft²
Ref Wdg	HA31804025 NONE
Sound Pressure @ 1M	72 dBA
VFD Rating	CONSTANT 1000:1
Outline Dwg	SS313097-100
Conn. Diag	EE7300T
Additional Specifications:	
0	
0	

EQUIV CKT (OHMS / PHASE)

R1	R2	X1	X2	Xm
0.2750	0.1790	1.1520	1.0280	31.6630

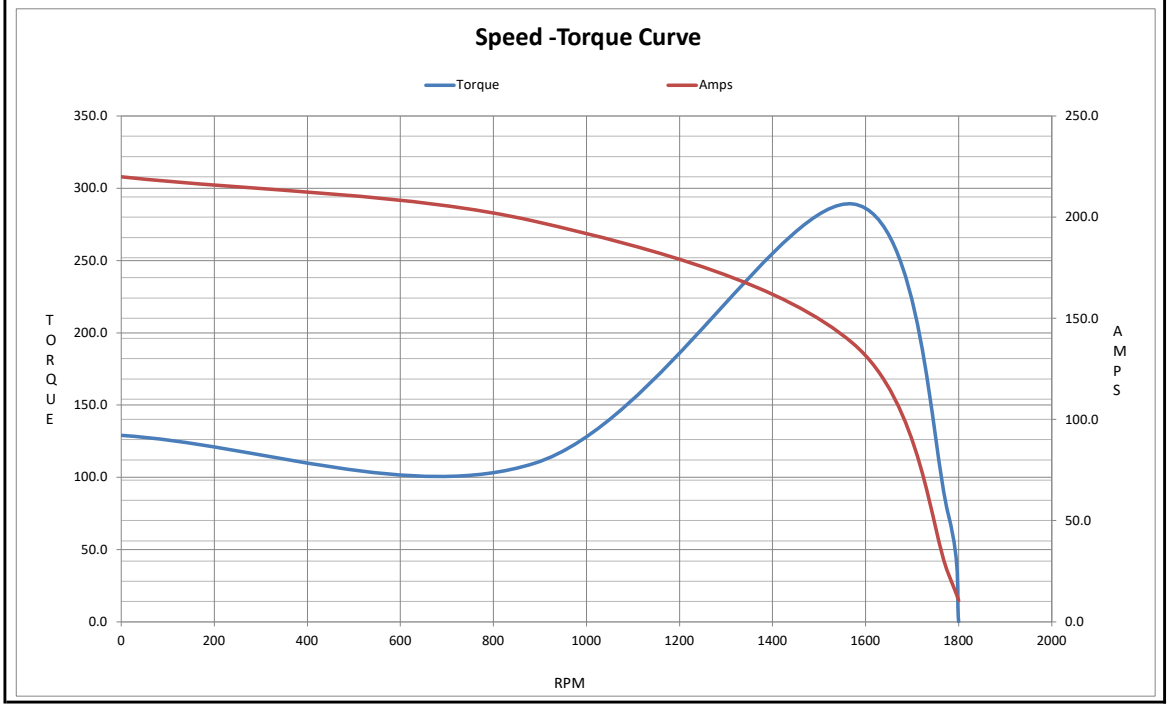

P.O. BOX 8003
WAUSAU, WI 54401-8003
PH. 715-675-3311

DATA VOLTS: 460

CERTIFICATION DATA SHEET

CUSTOMER:
ORDER #:
CONN. DIAGRAM: EE7300T
OUTLINE: SS313097-100
WINDING: HA31804025 NONE 3
SPEED:

CUSTOMER P.O. #:
REFERENCE MODEL #: 284THTCD7036
CAT #: Y567A
CUSTOMER PART #:
MOUNTING: F1/F2 CAPABLE
FAN: 504205B

TYPICAL MOTOR PERFORMANCE DATA

HP	KW	SYNC RPM	FL RPM	FRAME	ENCLOSURE	TYPE	KVA CODE	DESIGN
25	18.7	1800	1778	284TC	TENV	TTC	L	INF

PH	HZ	VOLTS	AMPS	START TYPE	DUTY	INSL	S.F.	AMB	ELEV.
3	60	575	23.6	INVERTER ONLY	CONT	H	1.15	40	3300

F.L. EFF	93.6	3/4 LD EFF	93.7	1/2 LD EFF	92.8	GTD EFF	ELECT. TYPE	
F.L. PF	84.8	3/4 LD PF	79.4	1/2 LD PF	68.1	93.2	SQ CAGE INV DUTY	

F.L. TORQUE	LR AMPS @ 460 V	L.R. TORQUE	B.D. TORQUE	F.L. RISE (° C)	
73.9 LB-FT	220	129 LB-FT 175%	289 LB-FT 391%	105	

SOUND PRESSURE	SOUND	ROTOR WK²	MAX. LOAD WK²	SAFE STALL TIME	STARTS/HOUR	APROX.
72 dBA	81 dBA	4.8 LB-FT²	40 LB-FT²	20 SEC.	2	0 LB.

*** SUPPLEMENTAL INFORMATION ***

DE BRACKET TYPE	ODE BRACKET TYPE	MOUNT TYPE	MOTOR ORIENTATION	SEVERE DUTY	HAZARDOUS LOCATION	DRIP COVER	SCREENS	PAINT
C-FACE	BRAKE OR ENCODER	RIGID	HORIZONTAL	NO	NONE	NO	NONE	BLACK (ENAMEL)

BEARINGS DE	BEARINGS ODE	GREASE	SHAFT TYPE	SPECIAL DE	SPECIAL ODE	SHAFT MATERIAL	FRAME MATERIAL
BALL 6311	BALL 6311	POLYREX EM	T	NONE	NONE	1045 HOT ROLLED (C-204	CAST IRON

THERMOSTATS	PROTECTORS	WDG RTD's	BRG RTD's	THERMISTORS	CONTROL	SPACE HEATERS
TSTATS (N/C)	NOT	NONE	NONE	NONE	FALSE	NA

R1 (ohms/ph)	R2 (ohms/ph)	X1 (ohms/ph)	X2 (ohms/ph)	Xm (ohms/ph)	VIBRATION (in/sec)	FLOAT
0.275	0.179	1.152	1.028	31.663	0.080	ODE

*
NOTES
*

INVERTER TORQUE: CONSTANT 1000:1
INV. HP SPEED RANGE: 2.0 X BASE SPEED

ENCODER: NORTHSTAR
ST56
NONE NONE **PPR**

BRAKE: NONE
NONE NONE
FT-LB: NA
VOLTAGE: NONE **HZ:**

PREPARED BY:
DATE: 11/28/2022

FORM: 3531 REV_4 2/27/06

UL: V-INS, CONST, OVERHEAT PRT DEV UL REC