marathon®

Inverter (Vector) Duty Motors

Model No: 284THFCD8028
Catalog No: Y569A

Inverter (Vector) Duty Motor, 25 HP, 3 Ph, 60 Hz, 230/460 V, 1800 RPM, 284T Frame, TEFC

©2026 Marathon, All Rights Reserved.

marathon®

Product Information Packet: Model No: 284THFCD8028, Catalog No: Y569A Inverter (Vector) Duty Motor, 25 HP, 3 Ph, 60 Hz, 230/460 V, 1800 RPM, 284T Frame, TEFC

Nameplate Specifications

Phase	**3**	Output HP	**25 Hp**
Output KW	**18.7 kW**	Voltage	**230/460 V**
Speed	**1770 r/min**	Synchronous RPM	**1800 r/min**
Service Factor	**1.00**	Frame	**284T**
Enclosure	**Totally Enclosed Fan Cooled**	Thermal Protection	**Thermostat**
Efficiency	**92.7 %**	Ambient Temperature	**40 °C**
Frequency	**60 Hz**	Current	**57.0/28.5 A**
Power Factor	**88.8**	Duty	**Continuous**
Insulation Class	**H**	Design Code	**INV**
KVA Code	**K**	Drive End Bearing Size	**6311**
Opp Drive End Bearing Size	**6211**	UL	**Recognized**
CSA	**Y**	CE	**Y**
IP Code	**55**	Number of Speeds	**1**

Technical Specifications

Electrical Type	**Squirrel Cage Inverter Duty**	Starting Method	**Inverter Only**
Poles	**4**	Rotation	**Reversible**
Resistance Main	**.393 O**	Mounting	**Rigid Base**
Motor Orientation	**Horizontal**	Drive End Bearing	**Ball**
Opp Drive End Bearing	**Ball**	Frame Material	**Cast Iron**
Shaft Type	**T**	Shaft Diameter	**1.875 in**
Assembly/Box Mounting	**F1/F2 Capable**	Inverter Load	**Constant 2000:1**

Drawings

Connection Drawing	**EE7308T**	Outline Drawing	**SS313098-100**

This is an uncontrolled document once printed or downloaded and is subject to change without notice. Date Created: 16/10/2026

DASH NO.	B	C	E	2E	2F	2FF	BA	BS	MOUNTING	FRAME
100	10.83	28.83	5.50	11.00	---	9.50	4.75	4.75	F1 OR F2	284T
200	12.68	30.33			9.50	11.00		5.50		284/286T

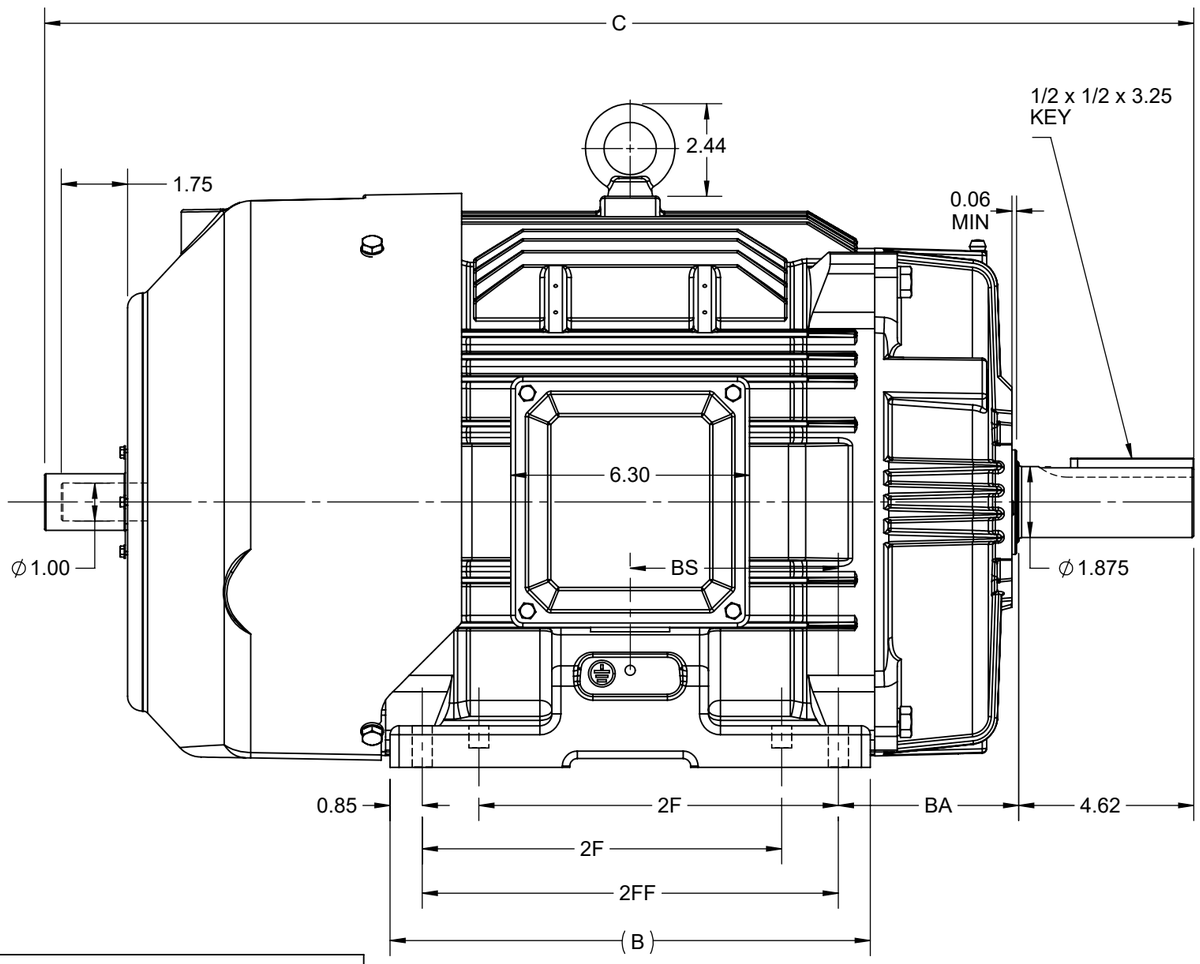

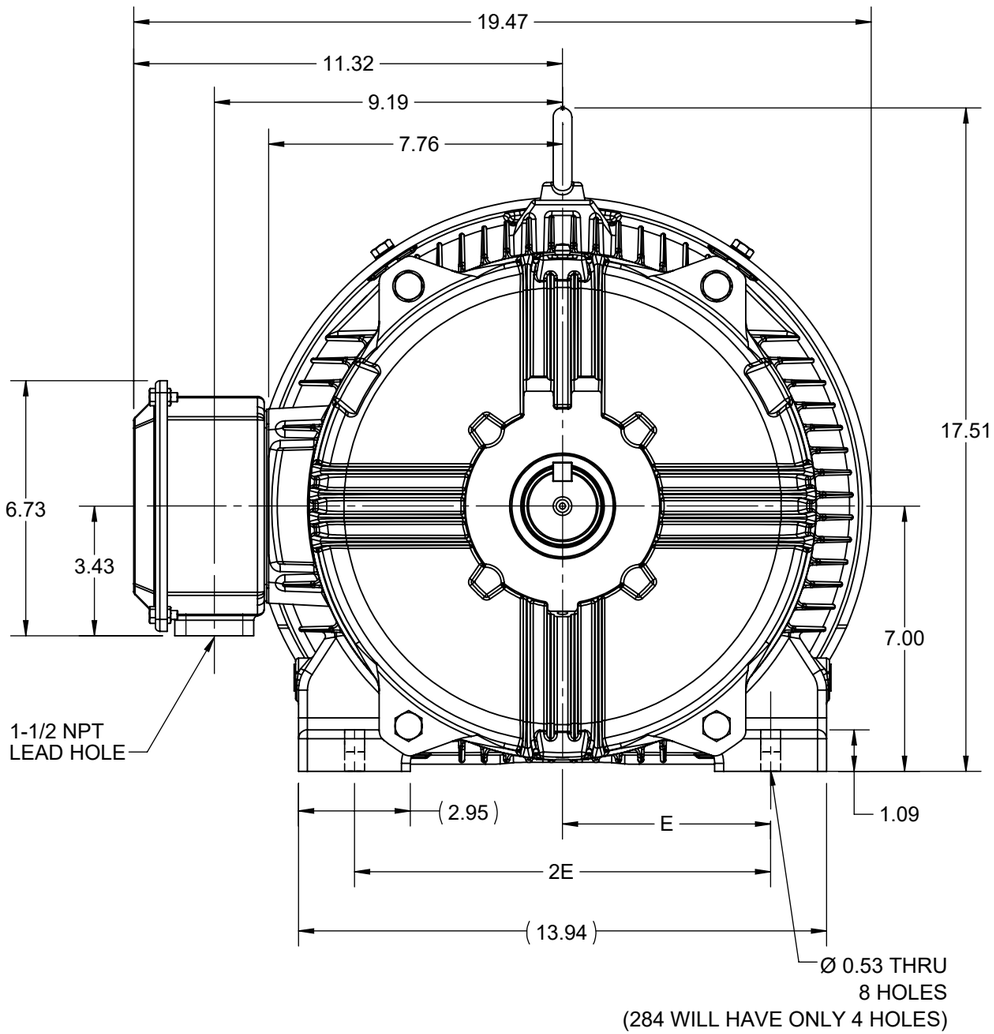

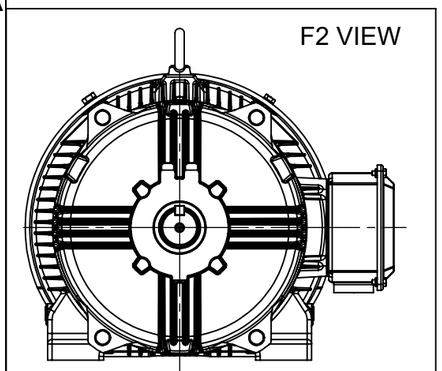

DRAWING REVISION	REVISION BY	REV DATE/© DATE
D	SB	07/24/2025
REQUEST NUMBER	APPROVED BY	DATE
CR-0023556	SBD	07/24/2025

REQUEST NUMBER DESCRIPTION
DRAWING TITLE BLOCK UPDATED

COPYRIGHT (PER REVISION DATE) MARATHON ELECTRIC, LLC. ALL RIGHTS RESERVED. PROPRIETARY AND CONFIDENTIAL INFORMATION - THIS DOCUMENT IS THE PROPERTY OF MARATHON ELECTRIC, LLC. ("OWNER") AND CONTAINS OWNER'S PROPRIETARY INFORMATION. ANY PERSON, CORPORATION OR OTHER FIRM RECEIVING IT IS DEEMED, BY RECEIVING IT, TO AGREE THAT IT, AND/OR ANY PART OF IT, SHALL NOT BE DISCLOSED TO ANY PERSON, CORPORATION OR OTHER ENTITY, DUPLICATED, AND/OR USED, EXCEPT AS EXPRESSLY APPROVED IN WRITING IN ADVANCE BY OWNER. THIS DOCUMENT SHALL BE RETURNED TO OWNER UPON REQUEST. IT MAY BE SUBJECT TO CERTAIN RESTRICTIONS UNDER APPLICABLE EXPORT CONTROL LAWS AND REGULATIONS.

PRIMARY DIMENSIONS ARE INCH
mm DIMENSIONS IN [BRACKETS]
ARE FOR REFERENCE ONLY

DRAWN BY	VS
DATE	29-05-2020
APPROVED BY	SBD
DATE	29-05-2020
REFERENCE	
THIRD ANGLE PROJECTION	

marathon™

DESCRIPTION
OUTLINE
284/286T FR-TEFC-CAST IRON-TACH MTG.

MATERIAL | PROCESS/FINISH

SIZE	DRAWING NUMBER	SHEET
B	SS313098	1 OF 1

HIGH VOLTAGE

(U1) T1 — L1
(V1) T2 — L2
(W1) T3 — L3
(U2) T4
(U3) T7
(V2) T5
(V3) T8
(W2) T6
(W3) T9

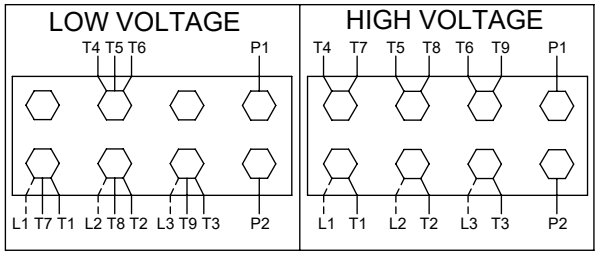

THREE PHASE
DUAL VOLTAGE MOTOR

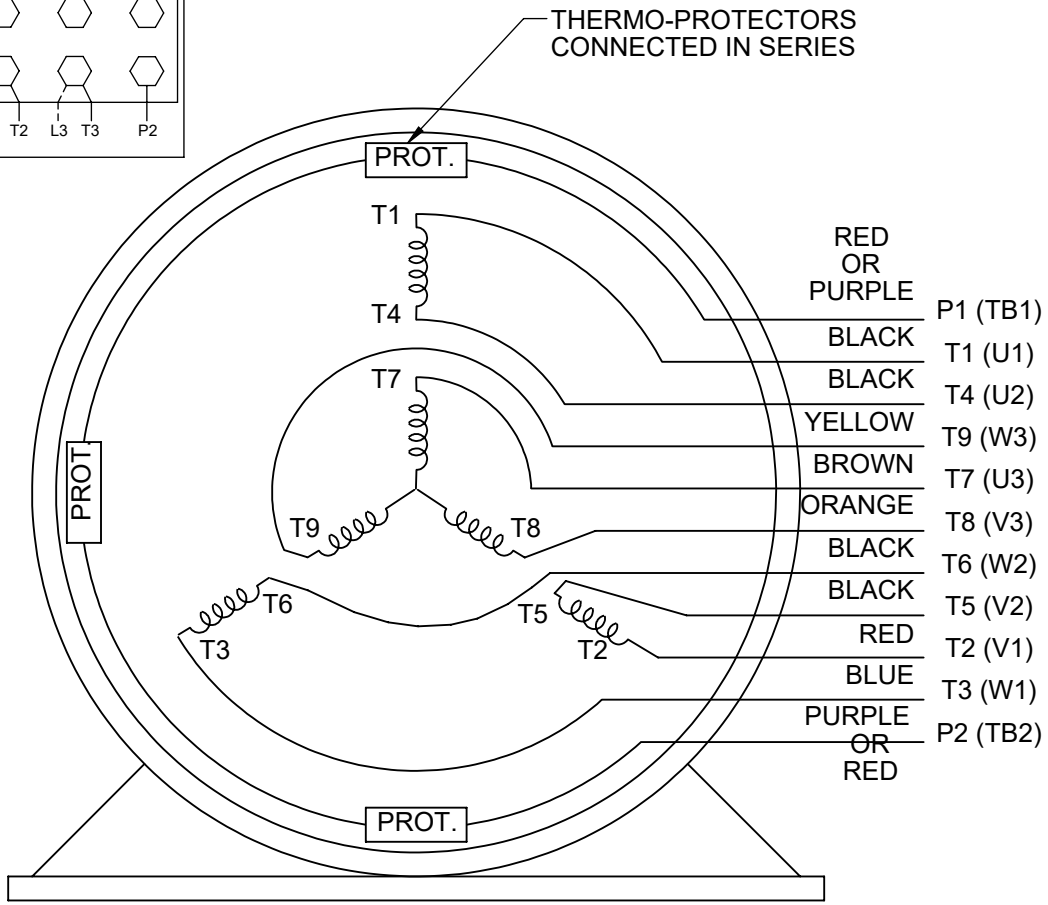

VIEW OF TERMINAL END

NOTE FOR FACTORY USE ONLY:
TO SURGE TEST FOR COMMON CONNECT:
HIGH VOLT: CONNECT P1 TO T1
THEN P2 TO L1
LOW VOLT: CONNECT P1 TO T1 & T7,
THEN P2 TO L1

LOW VOLTAGE

(U1) T1 — L1
(U3) T7 — L1
(V1) T2 — L2
(V3) T8 — L2
(W1) T3 — L3
(W3) T9 — L3
(U2) T4
(V2) T5
(W2) T6

NOTE: LEAD'S COLOR CAN BE YELLOW OR WHITE FOR IMG PLANT

DRAWING REVISION: U	REVISION BY: SB	REV DATE/© DATE: 08/01/2025	PRIMARY DIMENSIONS ARE INCH mm DIMENSIONS IN [BRACKETS] ARE FOR REFERENCE ONLY	DRAWN BY: SMC	marathon™
REQUEST NUMBER: CR-0023654	APPROVED BY: SBD	DATE: 08/01/2025		DATE: 05-13-1992	
REQUEST NUMBER DESCRIPTION: DRAWING TITLE BLOCK UPDATED				APPROVED BY: TB	DESCRIPTION: CONN DIAGRAM-EXTERNAL
				DATE: 05-13-1992	3 PHASE - DUAL VOLTAGE MOTOR
				REFERENCE: EE7308/EE7300	MATERIAL / PROCESS/FINISH
				THIRD ANGLE PROJECTION	SIZE: A — DRAWING NUMBER: EE7308T — SHEET: 1 OF 1

COPYRIGHT (PER REVISION DATE) MARATHON ELECTRIC, LLC. ALL RIGHTS RESERVED. PROPRIETARY AND CONFIDENTIAL INFORMATION - THIS DOCUMENT IS THE PROPERTY OF MARATHON ELECTRIC, LLC. ("OWNER") AND CONTAINS OWNER'S PROPRIETARY INFORMATION. ANY PERSON, CORPORATION OR OTHER FIRM RECEIVING IT IS DEEMED, BY RECEIVING IT, TO AGREE THAT IT, AND/OR ANY PART OF IT, SHALL NOT BE DISCLOSED TO ANY PERSON, CORPORATION OR OTHER ENTITY, DUPLICATED, AND/OR USED, EXCEPT AS EXPRESSLY APPROVED IN WRITING IN ADVANCE BY OWNER. THIS DOCUMENT SHALL BE RETURNED TO OWNER UPON REQUEST. IT MAY BE SUBJECT TO CERTAIN RESTRICTIONS UNDER APPLICABLE EXPORT CONTROL LAWS AND REGULATIONS.

Data Sheet

Date: 9/27/2021
Customer:
Attention:
Submitted by:

marathon® Motors

284THFCD8028

Submittal

Data @ 460 V

Motor Load Data

Load	0%	25%	50%	75%	100%	115%	125%	LR	
Current (Amps)	8.9	11.1	15.9	21.8	28.4	32.7	35.7	194	
Torque (ft-lb)	0.00	18.3	36.8	55.4	74.2	85.6	93.2	86.1	
RPM	1800	1793	1786	1778	1770	1,765	1761	0	
Efficiency (%)		90.6	93.3	93.4	92.7	92.1	91.6		
P.F. (%)	6.0	58.3	79.0	86.2	88.8	89.3	89.4	31.6	

Motor Speed Data

	LR	Pull-Up	BD	Rated	Idle
Speed (RPM)	0	885	1614	1770	1800
Current (Amps)	194	175	111	28.4	8.9
Torque (ft-lb)	86.1	73.2	210	74.2	0.00

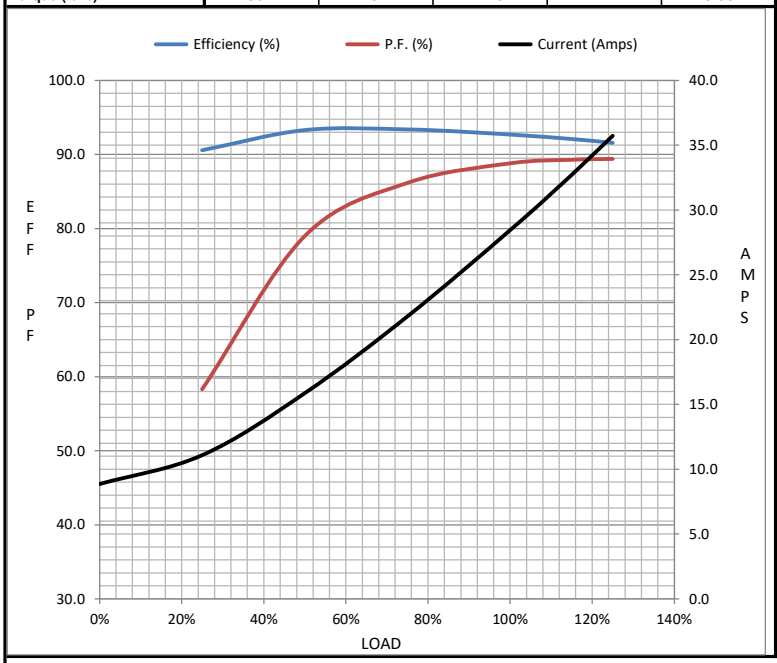

Information Block

HP	25.0	
Sync. RPM	1800	
Frame	284	
Enclosure	TEFC	
Construction	TFS	
Voltage	230/460	V
Frequency	60	Hz
Design	INV	
LR Code letter	K	
Service Factor	1.15	
Temp Rise @ FL	55	° C
Duty	CONT	
Ambient	40	° C
Elevation	3,300	feet
Rotor/Shaft wk²	1.134	Lb-Ft²
Ref Wdg	HA31804027 NONE	
Sound Pressure @ 1M	62	dBA
VFD Rating	CONSTANT 2000:1	
Outline Dwg	SS313098-100	
Conn. Diag	EE7308T	
Additional Specifications:		
0		
0		

EQUIV CKT (OHMS / PHASE)

R1	R2	X1	X2	Xm
0.2450	0.1540	0.9870	0.8730	29.3710

Speed -Torque Curve

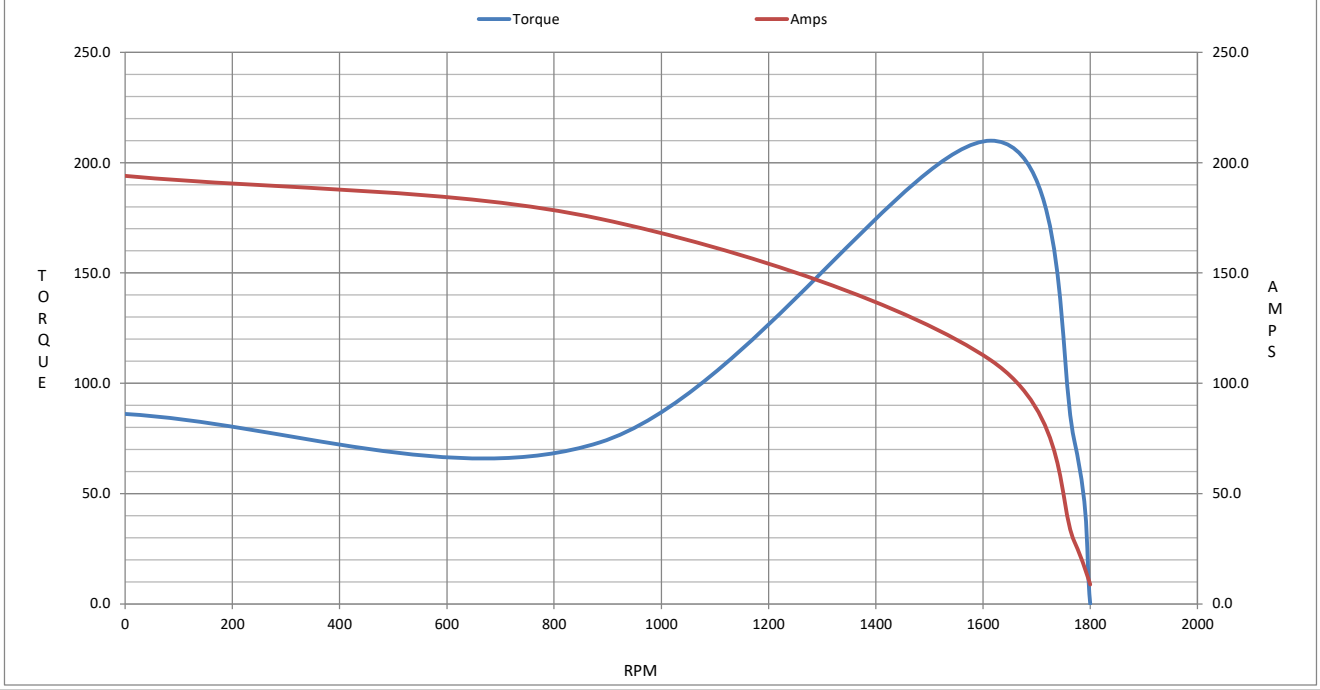

P.O. BOX 8003
WAUSAU, WI 54401-8003
PH. 715-675-3311

marathon® Motors

DATA VOLTS: 460

CERTIFICATION DATA SHEET

CUSTOMER:
ORDER #:
CONN. DIAGRAM: EE7308T
OUTLINE: SS313098-100
WINDING: HA31804027 NONE 2
SPEED:

CUSTOMER P.O. #:
REFERENCE MODEL #: 284THFCD8028
CAT #: Y569A
CUSTOMER PART #:
MOUNTING: F1/F2 CAPABLE

TYPICAL MOTOR PERFORMANCE DATA

HP	KW	SYNC RPM	FL RPM	FRAME	ENCLOSURE	TYPE	KVA CODE	DESIGN
25	18.7	1800	1770	284T	TEFC	TFS	K	INV

PH	HZ	VOLTS	AMPS	START TYPE	DUTY	INSL	S.F.	AMB	ELEV.
3	60	230/460	57/28.5	INVERTER ONLY	CONT	H	1.15	40	3300

F.L. EFF	92.7	3/4 LD EFF	93.4	1/2 LD EFF	93.3	GTD EFF	ELECT. TYPE
F.L. PF	88.8	3/4 LD PF	86.2	1/2 LD PF	79.0	92.1	SQ CAGE INV DUTY

F.L. TORQUE	LR AMPS @ 460 V	L.R. TORQUE	B.D. TORQUE	F.L. RISE (° C)	
74.2 LB-FT	194	86.1 LB-FT 116%	210 LB-FT 283%	55	

SOUND PRESSURE @ 3 FT.	SOUND POWER	ROTOR WK²	MAX. LOAD WK²	SAFE STALL TIME	STARTS/HOUR	APROX. MOTOR WGT
62 dBA	71 dBA	1.134 LB-FT²	40 LB-FT²	30 SEC.	2	390 LB.

*** SUPPLEMENTAL INFORMATION ***

DE BRACKET TYPE	ODE BRACKET TYPE	MOUNT TYPE	MOTOR ORIENTATION	SEVERE DUTY	HAZARDOUS LOCATION	DRIP COVER	SCREENS	PAINT
STANDARD	ENCODER	RIGID	HORIZONTAL	NO	NONE	YES	NONE	BLUE (ENAMEL)

BEARINGS DE	BEARINGS ODE	GREASE	SHAFT TYPE	SPECIAL DE	SPECIAL ODE	SHAFT MATERIAL	FRAME MATERIAL
BALL	BALL	POLYREX EM	T	NONE	NONE	1045 HOT ROLLED (C-204)	CAST IRON
6311	6211						

THERMOSTATS	PROTECTORS	WDG RTD's	BRG RTD's	THERMISTORS	CONTROL	SPACE HEATERS
TSTATS (N/C)	NOT	NONE	NONE	NONE	FALSE	NA

R1 (ohms/ph)	R2 (ohms/ph)	X1 (ohms/ph)	X2 (ohms/ph)	Xm (ohms/ph)	VIBRATION (in/sec)	FLOAT
0.245	0.154	0.987	0.873	29.371	0.150	ODE

* NOTES *

INVERTER TORQUE: CONSTANT 2000:1
INV. HP SPEED RANGE: 1.5 X BASE SPEED

ENCODER: DYNAPAR
HS35
NONE NONE PPR

BRAKE: NONE
NONE NONE
FT-LB: NA
VOLTAGE: NONE HZ:
UL: V-INS, CONST, OVERHEAT PRT DEV UL REC

PREPARED BY:
DATE: 9/27/2021

FORM: 3531 REV_4 2/27/06