marathon®

Fire Pump Motors

Model No: 256TTDBD4020
Catalog No: U501A

Fire Pump Motor, 25 HP, 3 Ph, 60 Hz, 190/380-400 V, 3600 RPM, 256T Frame, DP

©2026 Marathon, All Rights Reserved.

marathon®

Product Information Packet: Model No: 256TTDBD4020, Catalog No: U501A Fire Pump Motor, 25 HP, 3 Ph, 60 Hz, 190/380-400 V, 3600 RPM, 256T Frame, DP

Nameplate Specifications

Phase	**3**	Output HP	**25 Hp**
Output KW	**18.7 kW**	Voltage	**190/380-400 V**
Speed	**3550 r/min**	Synchronous RPM	**3600 r/min**
Service Factor	**1.15**	Frame	**256T**
Enclosure	**Drip Proof**	Thermal Protection	**No Protection**
Efficiency	**91 %**	Ambient Temperature	**50 °C**
Frequency	**60 Hz**	Current	**70.0/35.0-33.5 A**
Power Factor	**87**	Duty	**Continuous**
Insulation Class	**F**	Design Code	**B**
KVA Code	**G**	Drive End Bearing Size	**6209**
Opp Drive End Bearing Size	**6208**	UL	**No**
CSA	**Y**	CE	**Y**
IP Code	**23**	Number of Speeds	**1**

Technical Specifications

Electrical Type	**Squirrel Cage Induction Run**	Starting Method	**Part Wdg Start Low Volt Only & Wye Start Delta Run**
Poles	**2**	Rotation	**Reversible**
Resistance Main	**.635 O**	Mounting	**Rigid Base**
Motor Orientation	**Horizontal**	Drive End Bearing	**Ball**
Opp Drive End Bearing	**Ball**	Frame Material	**Rolled Steel**
Shaft Type	**T**	Overall Length	**24.22 in**
Frame Length	**12.2 in**	Shaft Diameter	**1 5/8 in**
Shaft Extension	**4.00 in**	Assembly/Box Mounting	**F1/F2 Capable**

Drawings

Connection Drawing	**EE7308AA**	Outline Drawing	**SS620685-256T**

This is an uncontrolled document once printed or downloaded and is subject to change without notice. Date Created: 16/10/2026

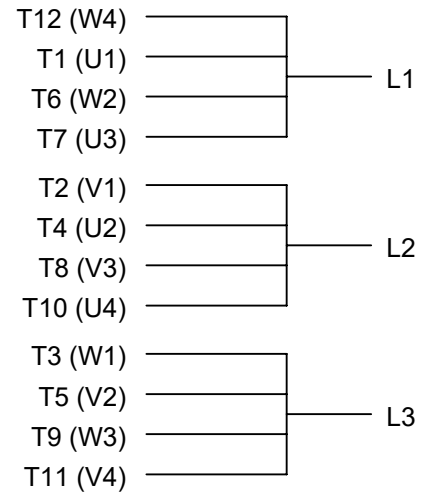

LOW VOLTAGE

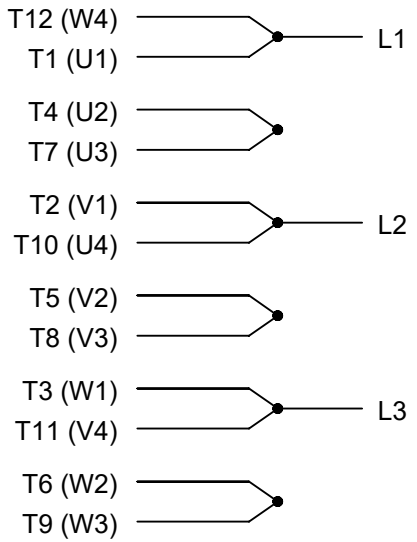

HIGH VOLTAGE

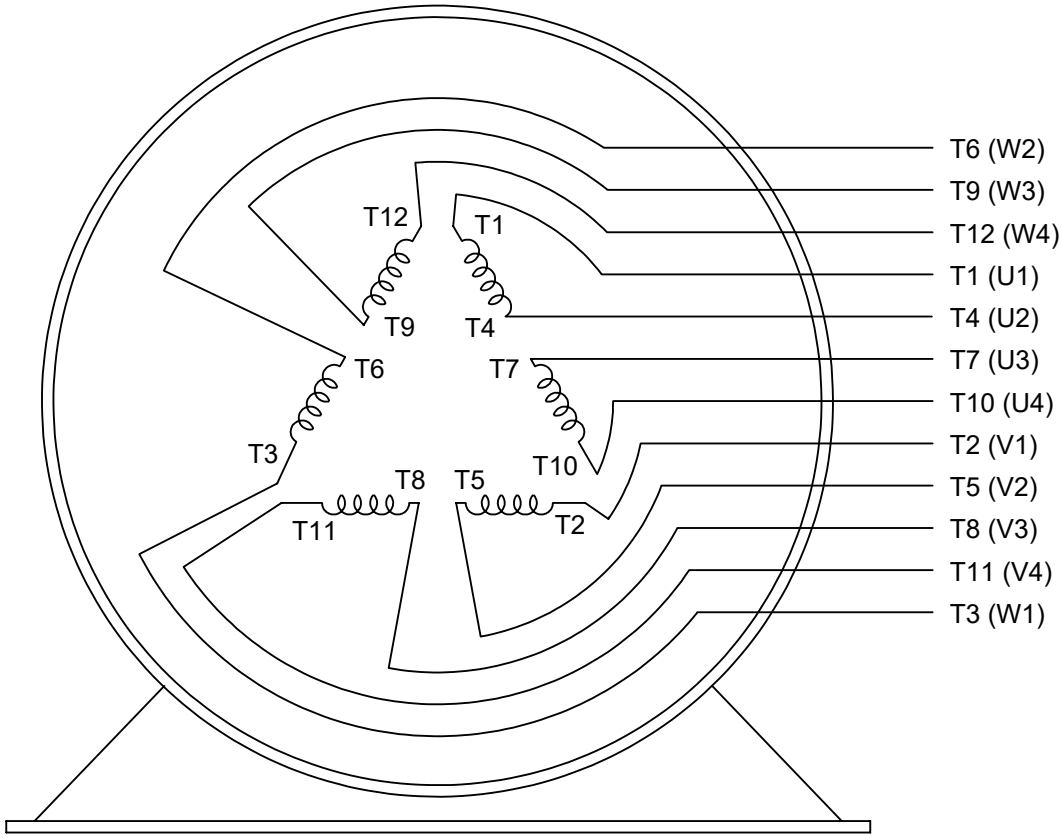

VIEW OF TERMINAL END

DRAWING REVISION: L	REVISION BY: SB	REV DATE/© DATE: 08/01/2025	PRIMARY DIMENSIONS ARE INCH mm DIMENSIONS IN [BRACKETS] ARE FOR REFERENCE ONLY	DRAWN BY: LZ	marathon™
REQUEST NUMBER: CR-0023654	APPROVED BY: SBD	DATE: 08/01/2025		DATE: 01-12-1994	
REQUEST NUMBER DESCRIPTION: DRAWING TITLE BLOCK UPDATED				APPROVED BY: GK	DESCRIPTION: CONN DIAGRAM-EXTERNAL 3Ø-2/1 DELTA-12 LEADS
				DATE: 01-14-1994	
				REFERENCE	MATERIAL / PROCESS/FINISH
				THIRD ANGLE PROJECTION	SIZE: A / DRAWING NUMBER: EE7308AA / SHEET: 1 OF 1

COPYRIGHT (PER REVISION DATE) MARATHON ELECTRIC, LLC. ALL RIGHTS RESERVED. PROPRIETARY AND CONFIDENTIAL INFORMATION - THIS DOCUMENT IS THE PROPERTY OF MARATHON ELECTRIC, LLC. ("OWNER") AND CONTAINS OWNER'S PROPRIETARY INFORMATION. ANY PERSON, CORPORATION OR OTHER FIRM RECEIVING IT IS DEEMED, BY RECEIVING IT, TO AGREE THAT IT, AND/OR ANY PART OF IT, SHALL NOT BE DISCLOSED TO ANY PERSON, CORPORATION OR OTHER ENTITY, DUPLICATED, AND/OR USED, EXCEPT AS EXPRESSLY APPROVED IN WRITING IN ADVANCE BY OWNER. THIS DOCUMENT SHALL BE RETURNED TO OWNER UPON REQUEST. IT MAY BE SUBJECT TO CERTAIN RESTRICTIONS UNDER APPLICABLE EXPORT CONTROL LAWS AND REGULATIONS.

Uncontrolled Copy

Data Sheet

Date: 1/25/2019
Customer:
Attention:
Submitted by: FAREEDA DUDEKULA

marathon® Motors

256TTDBD4020

Submittal

Data @ 400 V

Motor Load Data

Load	0%	25%	50%	75%	100%	115%	125%	LR	
Current (Amps)	11.3	13.8	19.0	25.9	33.4	38.5	42.0	201	
Torque (ft-lb)	0.00	9.2	18.5	27.8	37.2	42.8	46.5	56.0	
RPM	3600	3585	3575	3560	3545	3,535	3525	0	
Efficiency (%)		87.5	90.2	91.0	91.0	90.2	89.5		
P.F. (%)	7.0	57.0	77.0	85.0	88.0	89.0	89.0	44.0	

Motor Speed Data

	LR	Pull-Up	BD	Rated	Idle
Speed (RPM)	0	1800	3350	3545	3600
Current (Amps)	201	184	121	33.4	11.3
Torque (ft-lb)	56.0	48.0	92.0	37.2	0.00

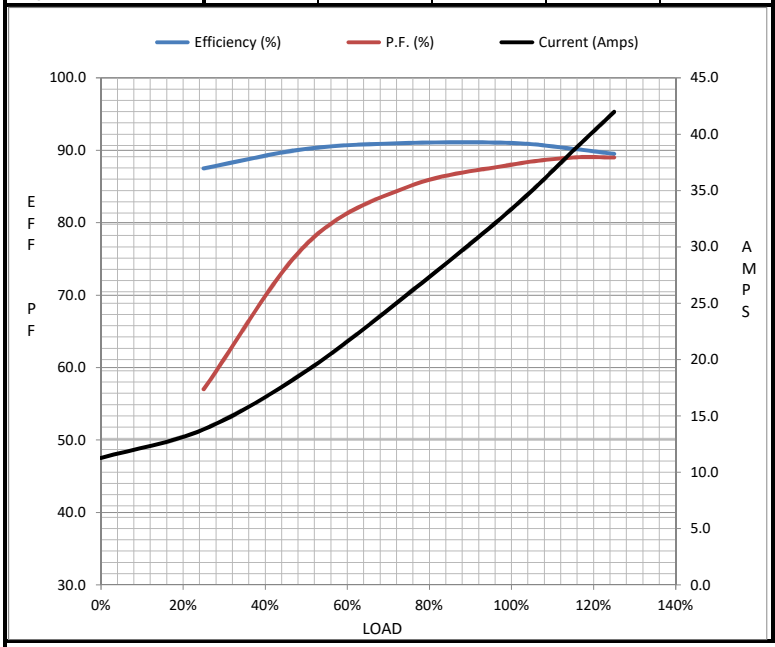

Information Block

HP	25.0	
Sync. RPM	3600	
Frame	256	
Enclosure	DP	
Construction	TDB	
Voltage	190/380-400	V
Frequency	60	Hz
Design	B	
LR Code letter	G	
Service Factor	1.15	
Temp Rise @ FL	40	° C
Duty	CONT	
Ambient	40	° C
Elevation	3,300	feet
Rotor/Shaft wk²	0.00	Lb-Ft²
Ref Wdg	IE3L1602110 NONE	
Sound Pressure @ 1M	0	dBA
VFD Rating	NONE	
Outline Dwg	SS620685-256T	
Conn. Diag	EE7308AA	
Additional Specifications:		
0		
0		

EQUIV CKT (OHMS / PHASE)

R1	R2	X1	X2	Xm
0.2830	0.1070	0.6520	0.5660	21.2820

