marathon®

Fire Pump Motors

Model No: 254TTFPA14014
Catalog No: Y1608

Fire Pump Motor, 15 HP, 3 Ph, 60 Hz, 230/460 V, 3600 RPM, 254T Frame, TEFC

©2026 Marathon, All Rights Reserved.

marathon®

Product Information Packet: Model No: 254TTFPA14014, Catalog No: Y1608 Fire Pump Motor, 15 HP, 3 Ph, 60 Hz, 230/460 V, 3600 RPM, 254T Frame, TEFC

Nameplate Specifications

Phase	**3**	Output HP	**15 Hp**
Output KW	**11.2 kW**	Voltage	**230/460 V**
Speed	**3520 r/min**	Synchronous RPM	**3600 r/min**
Service Factor	**1.15**	Frame	**254T**
Enclosure	**Totally Enclosed Fan Cooled**	Thermal Protection	**No Protection**
Efficiency	**90.2 %**	Ambient Temperature	**40 °C**
Frequency	**60 Hz**	Current	**35.0/17.5 A**
Power Factor	**87**	Duty	**Continuous**
Insulation Class	**F**	Design Code	**B**
KVA Code	**G**	Drive End Bearing Size	**6309**
Opp Drive End Bearing Size	**6207**	UL	**Listed**
CSA	**Y**	CE	**Y**
IP Code	**43**	Number of Speeds	**1**

Technical Specifications

Electrical Type	**Squirrel Cage Induction Run**	Starting Method	**Part Wdg Start Low Volt Only & Wye Start Delta Run**
Poles	**2**	Rotation	**Reversible**
Resistance Main	**.63 O**	Mounting	**Rigid Base**
Motor Orientation	**Horizontal**	Drive End Bearing	**Ball**
Opp Drive End Bearing	**Ball**	Frame Material	**Cast Iron**
Shaft Type	**T**	Overall Length	**23.47 in**
Frame Length	**11.75 in**	Shaft Diameter	**1 5/8 in**
Shaft Extension	**4.20 in**	Assembly/Box Mounting	**F1/F2 Capable**

Drawings

Connection Drawing	**A-EE7308AA**	Outline Drawing	**B-SS203005-1175**

This is an uncontrolled document once printed or downloaded and is subject to change without notice. Date Created: 15/10/2026

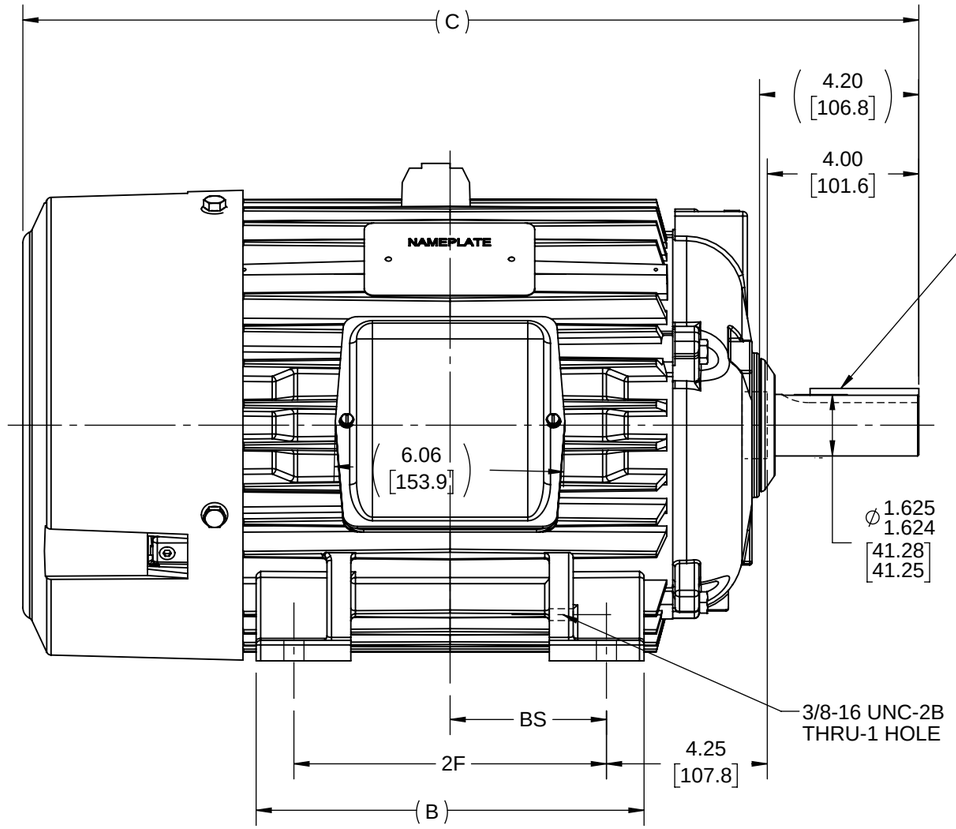

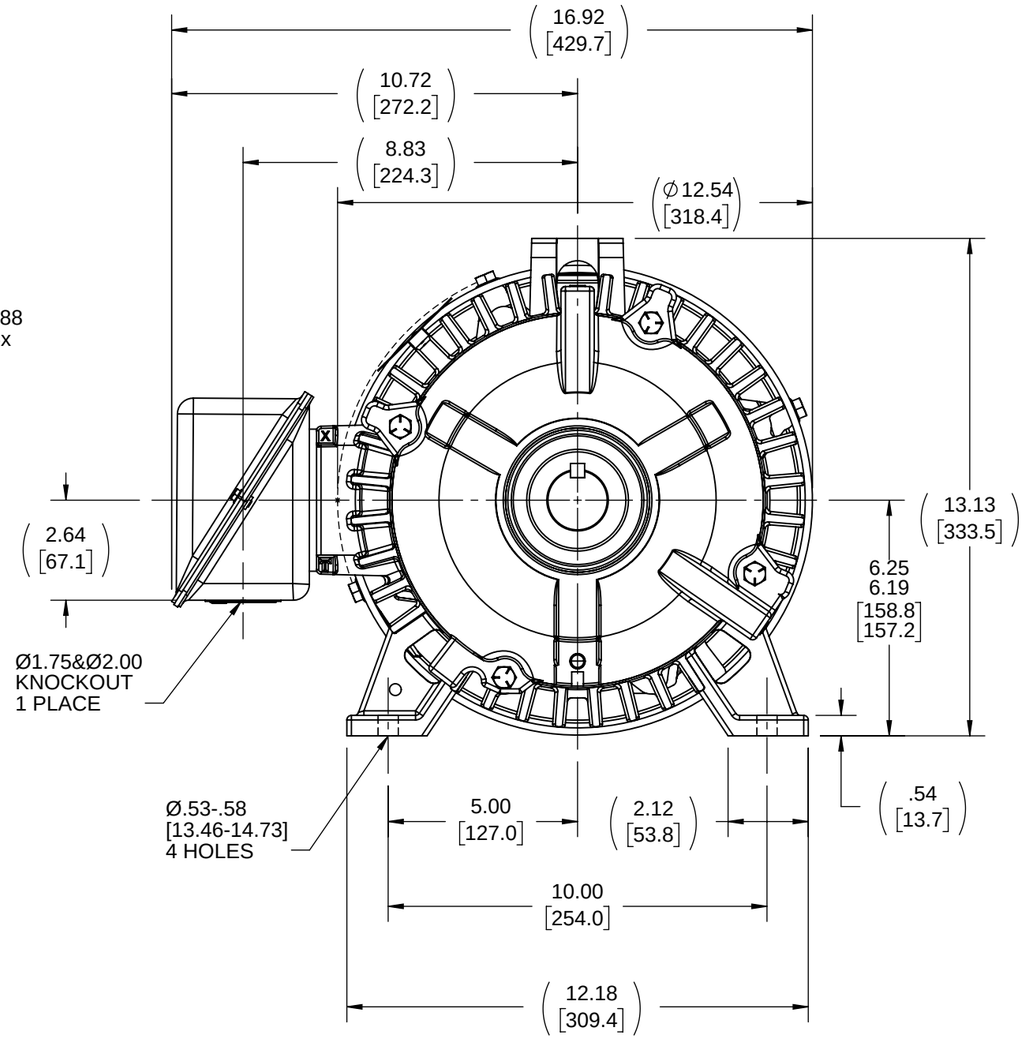

1. C'BOX CAN BE ROTATED IN 90° STEPS
2. C'BOX CAN BE MOUNTED ON OPPOSITE SIDE BY REMOVING BRACKETS AND TURNING FRAME 180°
3. NAMEPLATES TO BE READ FROM CONDUIT BOX SIDE OF MOTOR

DASH	FRAME	B	C	2F	BS
1175	254T	10.25 [260.35]	23.47 [596.14]	8.25 [209.55]	4.12 [104.65]
1350	256T	12.00 [304.80]	25.22 [640.59]	10.00 [254.00]	5.00 [127.00]

DRAWING REVISION	REVISION BY	REV DATE/© DATE
L	BISWA	20/05/2026
REQUEST NUMBER	APPROVED BY	DATE
CR-0026330	RMS	20/05/2026

REQUEST NUMBER DESCRIPTION
DRAWING TITLE BLOCK UPDATED

COPYRIGHT (PER REVISION DATE) MARATHON ELECTRIC, LLC. ALL RIGHTS RESERVED. PROPRIETARY AND CONFIDENTIAL INFORMATION - THIS DOCUMENT IS THE PROPERTY OF MARATHON ELECTRIC, LLC. ("OWNER") AND CONTAINS OWNER'S PROPRIETARY INFORMATION. ANY PERSON, CORPORATION OR OTHER FIRM RECEIVING IT IS DEEMED, BY RECEIVING IT, TO AGREE THAT IT, AND/OR ANY PART OF IT, SHALL NOT BE DISCLOSED TO ANY PERSON, CORPORATION OR OTHER ENTITY, DUPLICATED, AND/OR USED, EXCEPT AS EXPRESSLY APPROVED IN WRITING IN ADVANCE BY OWNER. THIS DOCUMENT SHALL BE RETURNED TO OWNER UPON REQUEST. IT MAY BE SUBJECT TO CERTAIN RESTRICTIONS UNDER APPLICABLE EXPORT CONTROL LAWS AND REGULATIONS.

TOLERANCES (EXCEPT AS NOTED):

DEC.	INCH	mm	ANGLE
.X	±0.1	[±3]	±0.5°
.XX	±0.01	[±0.3]	
.XXX	±0.005	[±0.13]	
.XXXX	±0.0005	[±0.013]	

REMOVE BURRS & BREAK SHARP EDGES: .003/.015 [.08/.38] X 45°
CORNER FILLETS: R.02 [.5]
MACHINED SURFACES: 125 INCH / 3.2 mm
mm DIMENSIONS IN [BRACKETS] ARE FOR REFERENCE ONLY

DRAWN BY	JHL
DATE	09-15-1994
APPROVED BY	JPN
DATE	09-15-1994
REFERENCE	SS203000
THIRD ANGLE PROJECTION	

marathon™

DESCRIPTION
OUTLINE
250T FR.-TEFC-BB-TS-STD.

MATERIAL	PROCESS/FINISH

SIZE	DRAWING NUMBER	SHEET
B	SS203005	1 OF 1

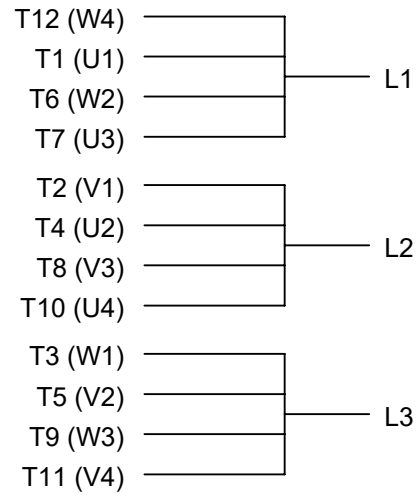

LOW VOLTAGE

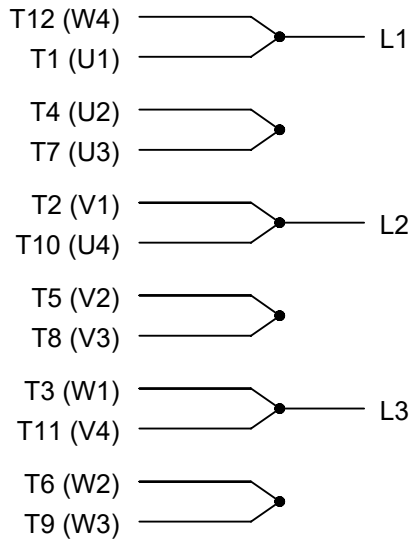

HIGH VOLTAGE

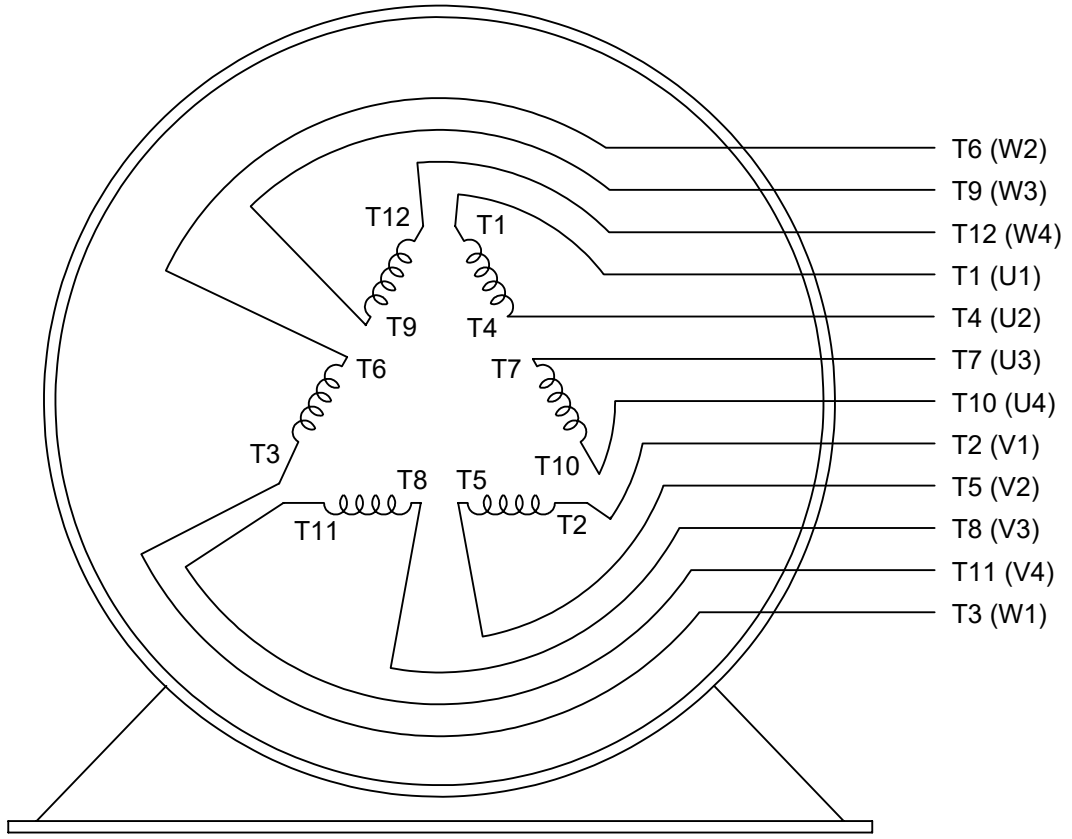

VIEW OF TERMINAL END

DRAWING REVISION: L	REVISION BY: SB	REV DATE/© DATE: 08/01/2025	PRIMARY DIMENSIONS ARE INCH mm DIMENSIONS IN [BRACKETS] ARE FOR REFERENCE ONLY	DRAWN BY: LZ	marathon™
REQUEST NUMBER: CR-0023654	APPROVED BY: SBD	DATE: 08/01/2025		DATE: 01-12-1994	
REQUEST NUMBER DESCRIPTION: DRAWING TITLE BLOCK UPDATED				APPROVED BY: GK	DESCRIPTION: CONN DIAGRAM-EXTERNAL 3Ø-2/1 DELTA-12 LEADS
				DATE: 01-14-1994	
				REFERENCE	MATERIAL / PROCESS/FINISH
				THIRD ANGLE PROJECTION	SIZE: A / DRAWING NUMBER: EE7308AA / SHEET: 1 OF 1

COPYRIGHT (PER REVISION DATE) MARATHON ELECTRIC, LLC. ALL RIGHTS RESERVED. PROPRIETARY AND CONFIDENTIAL INFORMATION - THIS DOCUMENT IS THE PROPERTY OF MARATHON ELECTRIC, LLC. ("OWNER") AND CONTAINS OWNER'S PROPRIETARY INFORMATION. ANY PERSON, CORPORATION OR OTHER FIRM RECEIVING IT IS DEEMED, BY RECEIVING IT, TO AGREE THAT IT, AND/OR ANY PART OF IT, SHALL NOT BE DISCLOSED TO ANY PERSON, CORPORATION OR OTHER ENTITY, DUPLICATED, AND/OR USED, EXCEPT AS EXPRESSLY APPROVED IN WRITING IN ADVANCE BY OWNER. THIS DOCUMENT SHALL BE RETURNED TO OWNER UPON REQUEST. IT MAY BE SUBJECT TO CERTAIN RESTRICTIONS UNDER APPLICABLE EXPORT CONTROL LAWS AND REGULATIONS.

Uncontrolled Copy

Data Sheet

Date: 12/10/2018
Customer:
Attention:
Submitted by: FAREEDA DUDEKULA

marathon® electric

254TTFPA14014

Submittal

Data @ 460 V

Motor Load Data

Load	0%	25%	50%	75%	100%	115%	125%	LR	
Current (Amps)	5.8	7.3	10.5	14.0	17.5	20.5	22.5	111	
Torque (ft-lb)	0.00	5.5	11.0	16.8	22.5	26.0	28.0	43.0	
RPM	3600	3578	3560	3535	3520	3,500	3490	0	
Efficiency (%)		83.5	89.5	90.2	90.2	90.2	89.5		
P.F. (%)	10.5	58.0	77.0	84.0	87.0	88.0	88.5	42.0	

Motor Speed Data

	LR	Pull-Up	BD	Rated	Idle
Speed (RPM)	0	1800	3170	3520	3600
Current (Amps)	111	100	71.0	17.5	5.8
Torque (ft-lb)	43.0	39.0	67.0	22.5	0.00

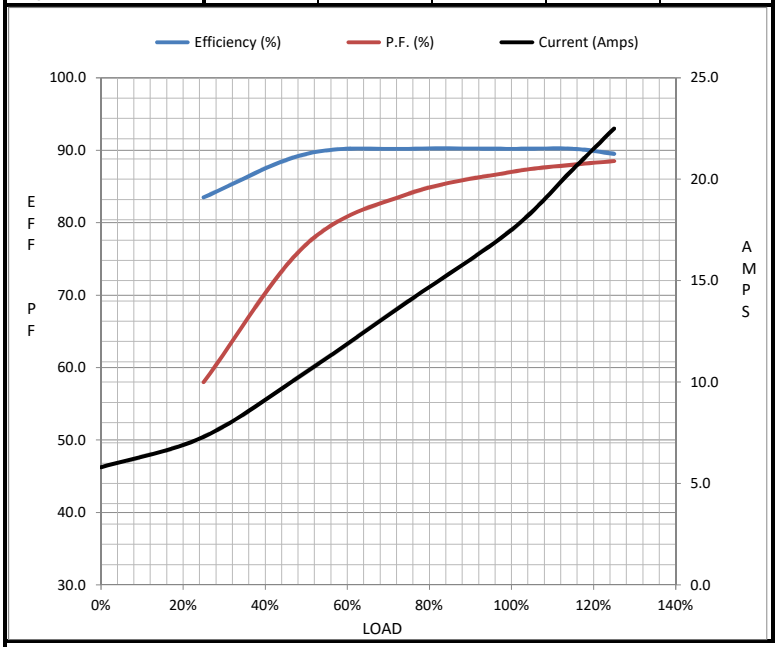

Information Block

HP	15.0	
Sync. RPM	3600	
Frame	254	
Enclosure	TEFC	
Construction	TFS	
Voltage	230/460	V
Frequency	60	Hz
Design	A	
LR Code letter	G	
Service Factor	1.15	
Temp Rise @ FL	55	° C
Duty	CONT	
Ambient	40	° C
Elevation	1,000	feet
Rotor/Shaft wk²	0.60	Lb-Ft²
Ref Wdg	K2152215 NONE	
Sound Pressure @ 1M	72	dBA
VFD Rating	NONE	
Outline Dwg	B-SS203005-1175	
Conn. Diag	A-EE7308AA	
Additional Specifications:		
0		
0		

EQUIV CKT (OHMS / PHASE)

R1	R2	X1	X2	Xm
0.4380	0.3290	1.3890	1.2490	45.1710

Speed -Torque Curve

