marathon®

Close-Coupled Pump Motors

Model No: 254TTFCD6006
Catalog No: GT3121A

Close-Coupled Pump Motor, 15 & 10 HP, 3 Ph, 60 & 50 Hz, 230/460 & 190/380 V, 3600 RPM, 254JM Frame, TEFC

©2026 Marathon, All Rights Reserved.

marathon®

Product Information Packet: Model No: 254TTFCD6006, Catalog No: GT3121A Close-Coupled Pump Motor, 15 & 10 HP, 3 Ph, 60 & 50 Hz, 230/460 & 190/380 V, 3600 RPM, 254JM Frame, TEFC

Nameplate Specifications

Phase	**3**	Output HP	**15 & 10 Hp**
Output KW	**11.2 & 7.5 kW**	Voltage	**230/460 & 190/380 V**
Speed	**3545 & 2955 r/min**	Synchronous RPM	**3600 & 3000 r/min**
Service Factor	**1.15 & 1.15**	Frame	**254JM**
Enclosure	**Totally Enclosed Fan Cooled**	Thermal Protection	**No Protection**
Efficiency	**91 & 90.2 %**	Ambient Temperature	**40 °C**
Frequency	**60 & 50 Hz**	Current	**35.5/17.8 & 29.6/14.8 A**
Power Factor	**87**	Duty	**Continuous**
Insulation Class	**F**	Design Code	**B**
KVA Code	**G**	Drive End Bearing Size	**6309**
Opp Drive End Bearing Size	**6209**	UL	**Listed**
CSA	**Y**	CE	**Y**
IP Code	**55**	Number of Speeds	**1**
Hazardous Location	**DIVISION 2 T2B**		

Technical Specifications

Electrical Type	**Squirrel Cage Inverter Rated**	Starting Method	**Line Or Inverter**
Poles	**2**	Rotation	**Reversible**
Resistance Main	**.788 O**	Mounting	**Rigid Base**
Motor Orientation	**Horizontal**	Drive End Bearing	**Ball**
Opp Drive End Bearing	**Ball**	Frame Material	**Cast Iron**
Shaft Type	**JM**	Overall Length	**26.15 in**
Frame Length	**10.0 in**	Shaft Diameter	**1.375 in**
Shaft Extension	**5.5 in**	Assembly/Box Mounting	**F1/F2 Capable**
Inverter Load	**Constant 2:1/Variable 10:1**		

Drawings

Connection Drawing	**EE7308K**	Outline Drawing	**SS620795-100**

This is an uncontrolled document once printed or downloaded and is subject to change without notice. Date Created: 16/10/2026

DASH NO.	B	C	E	2E	2F	2FF	AG	AH	BA	BV	EQ	ET	MOUNTING	FRAME
100	9.60	26.16	5.00	10.00	---	8.25	20.91	5.25	4.75	9.75	0.62	2.99	F1 OR F2	254JM
200	11.34	27.89			8.25	10.00	22.64			10.50				254/256JM

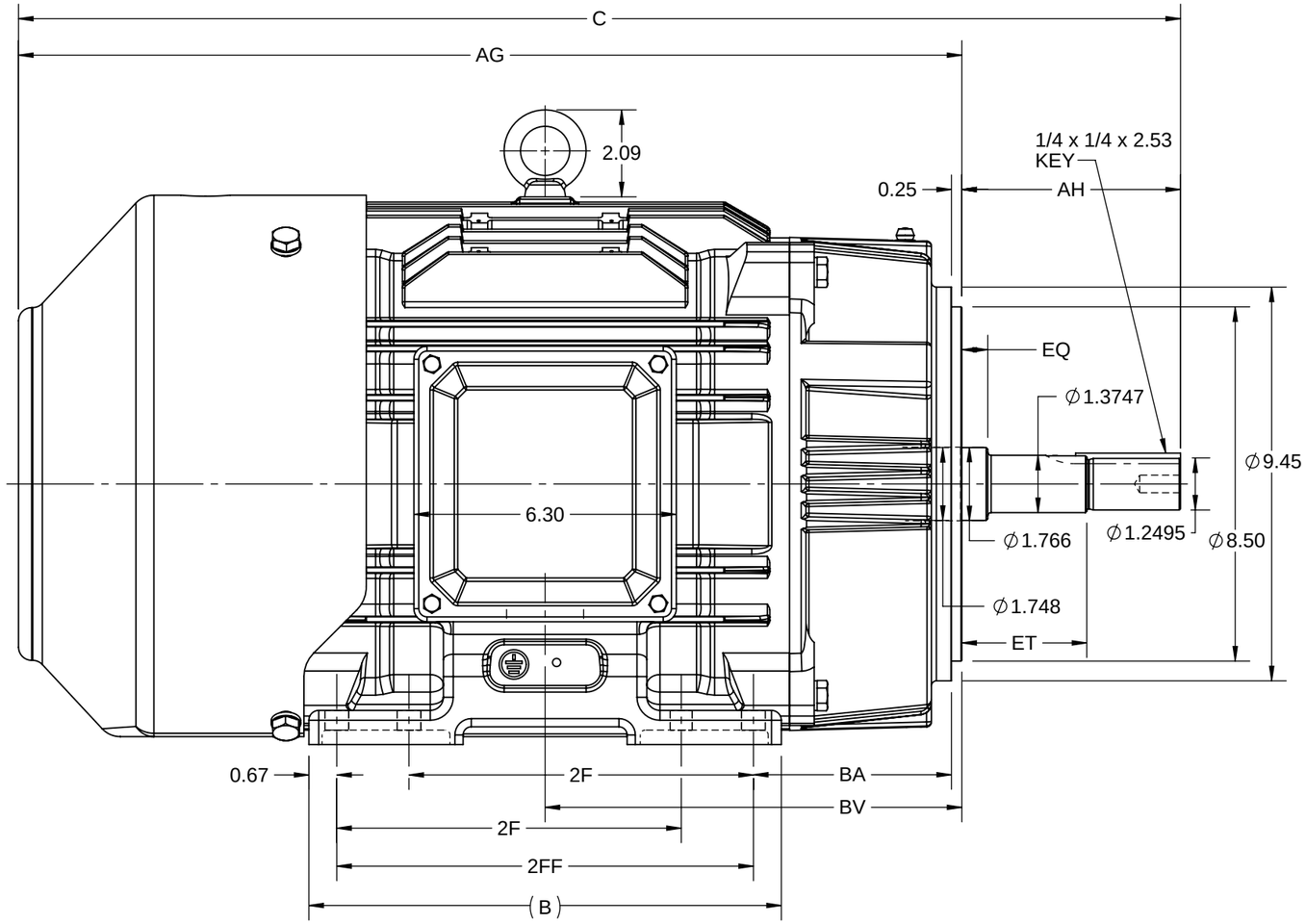

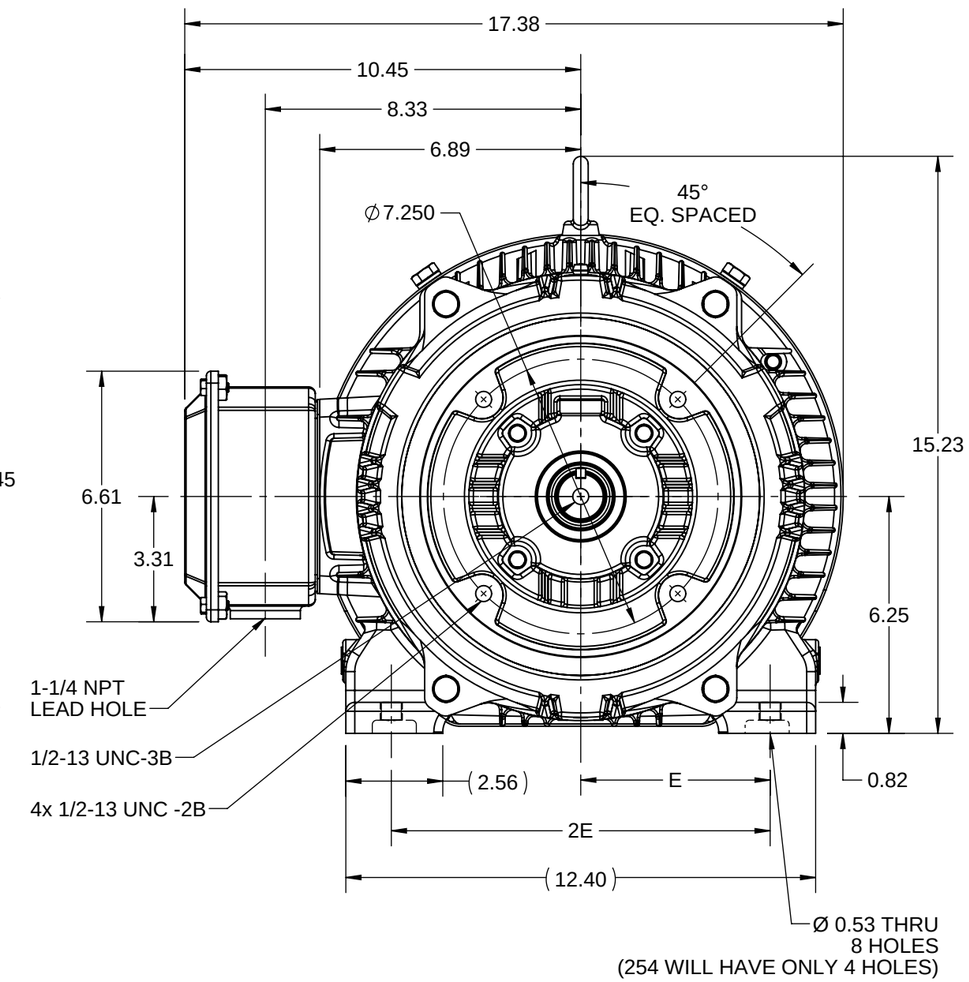

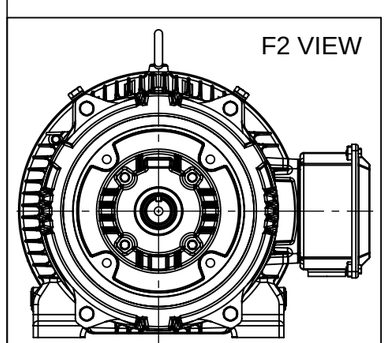

DRAWING REVISION	REVISION BY	REV DATE/© DATE
D	SB	05/26/2026
REQUEST NUMBER	APPROVED BY	DATE
CR-0026396	RMS	05/26/2026

REQUEST NUMBER DESCRIPTION
DRAWING TITLE BLOCK UPDATED

COPYRIGHT (PER REVISION DATE) MARATHON ELECTRIC, LLC. ALL RIGHTS RESERVED. PROPRIETARY AND CONFIDENTIAL INFORMATION - THIS DOCUMENT IS THE PROPERTY OF MARATHON ELECTRIC, LLC. ("OWNER") AND CONTAINS OWNER'S PROPRIETARY INFORMATION. ANY PERSON, CORPORATION OR OTHER FIRM RECEIVING IT IS DEEMED, BY RECEIVING IT, TO AGREE THAT IT, AND/OR ANY PART OF IT, SHALL NOT BE DISCLOSED TO ANY PERSON, CORPORATION OR OTHER ENTITY, DUPLICATED, AND/OR USED, EXCEPT AS EXPRESSLY APPROVED IN WRITING IN ADVANCE BY OWNER. THIS DOCUMENT SHALL BE RETURNED TO OWNER UPON REQUEST. IT MAY BE SUBJECT TO CERTAIN RESTRICTIONS UNDER APPLICABLE EXPORT CONTROL LAWS AND REGULATIONS.

PRIMARY DIMENSIONS ARE INCH
mm DIMENSIONS IN [BRACKETS]
ARE FOR REFERENCE ONLY

DRAWN BY	SN
DATE	12/04/2017
APPROVED BY	SBD
DATE	12/04/2017
REFERENCE	
THIRD ANGLE PROJECTION	

marathon™

DESCRIPTION
OUTLINE
TEFC-254/256 JM FR--CAST IRON

MATERIAL	PROCESS/FINISH

SIZE	DRAWING NUMBER	SHEET
B	SS620795	1 OF 1

Uncontrolled Copy

LOW VOLTAGE

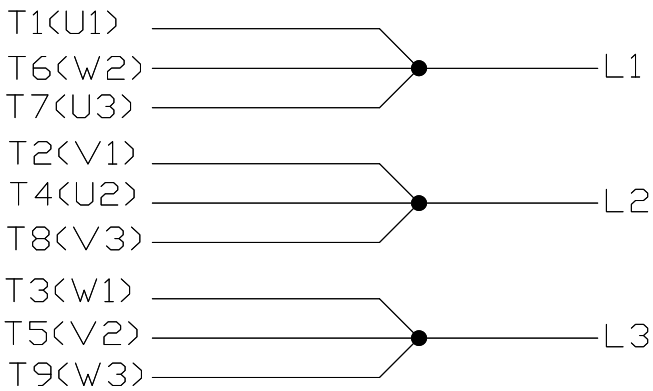

HIGH VOLTAGE

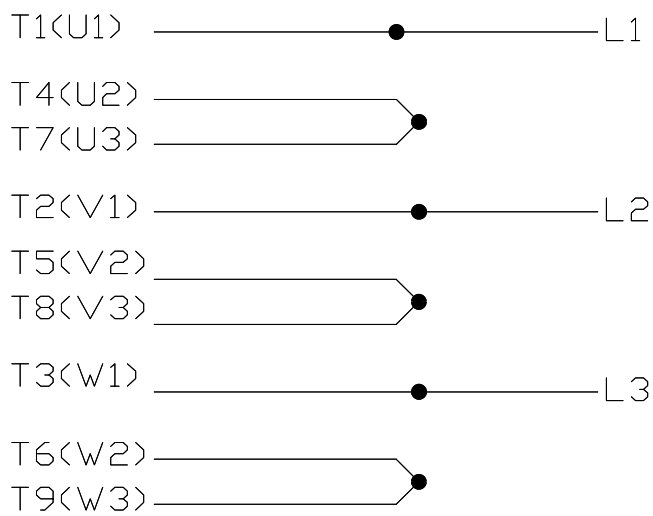

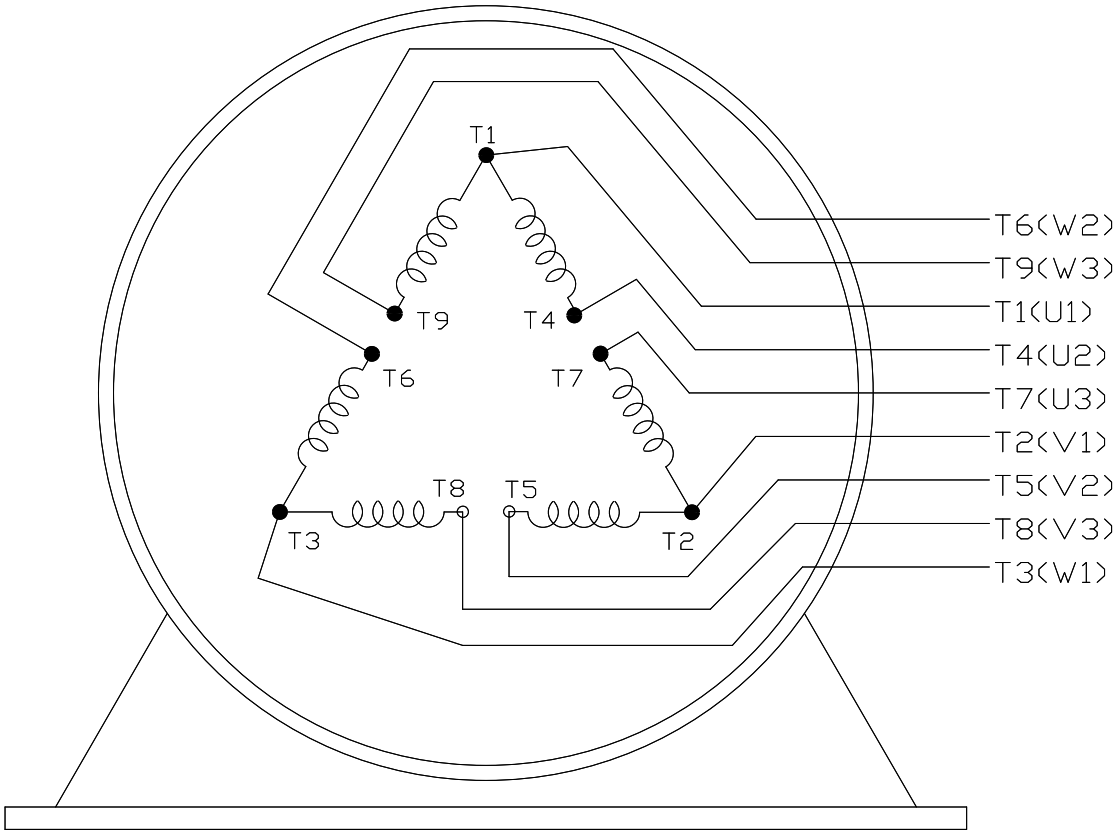

VIEW OF TERMINAL END

DRAWING REVISION F	REVISION BY SB	REV DATE/ © DATE 08/01/2025	PRIMARY DIMENSIONS ARE INCH mm DIMENSIONS IN [BRACKETS] ARE FOR REFERENCE ONLY	DRAWN BY PGK	marathon™
REQUEST NUMBER CR-0023654	APPROVED BY SBD	DATE 08/01/2025		DATE 06/04/1997	
REQUEST NUMBER DESCRIPTION DRAWING TITLE BLOCK UPDATED				APPROVED BY GK	DESCRIPTION CONN DIAGRAM-EXTERNAL DELTA CON. - 3Ø - 9 LEADS
				DATE 06/15/1997	
				REFERENCE	MATERIAL / PROCESS/FINISH
				THIRD ANGLE PROJECTION	SIZE A / DRAWING NUMBER EE7308K / SHEET 1 OF 1

COPYRIGHT (PER REVISION DATE) MARATHON ELECTRIC, LLC. ALL RIGHTS RESERVED. PROPRIETARY AND CONFIDENTIAL INFORMATION - THIS DOCUMENT IS THE PROPERTY OF MARATHON ELECTRIC, LLC. ("OWNER") AND CONTAINS OWNER'S PROPRIETARY INFORMATION. ANY PERSON, CORPORATION OR OTHER FIRM RECEIVING IT IS DEEMED, BY RECEIVING IT, TO AGREE THAT IT, AND/OR ANY PART OF IT, SHALL NOT BE DISCLOSED TO ANY PERSON, CORPORATION OR OTHER ENTITY, DUPLICATED, AND/OR USED, EXCEPT AS EXPRESSLY APPROVED IN WRITING IN ADVANCE BY OWNER. THIS DOCUMENT SHALL BE RETURNED TO OWNER UPON REQUEST. IT MAY BE SUBJECT TO CERTAIN RESTRICTIONS UNDER APPLICABLE EXPORT CONTROL LAWS AND REGULATIONS.

Uncontrolled Copy

MARATHON ELECTRIC CORPORATION

TYPICAL PERFORMANCE CURVE for AC MOTOR

Customer	**Curve at**	460	**Volts**	**HP**	15&10	**PHASE**	3
		60	**HZ**				
Model No 254TTFCD6006		15	**HP**	**VOLTS**	230/460&190/380		
Catalog No GT3121A				**HZ**	60&50	**RPM**	3545&2955

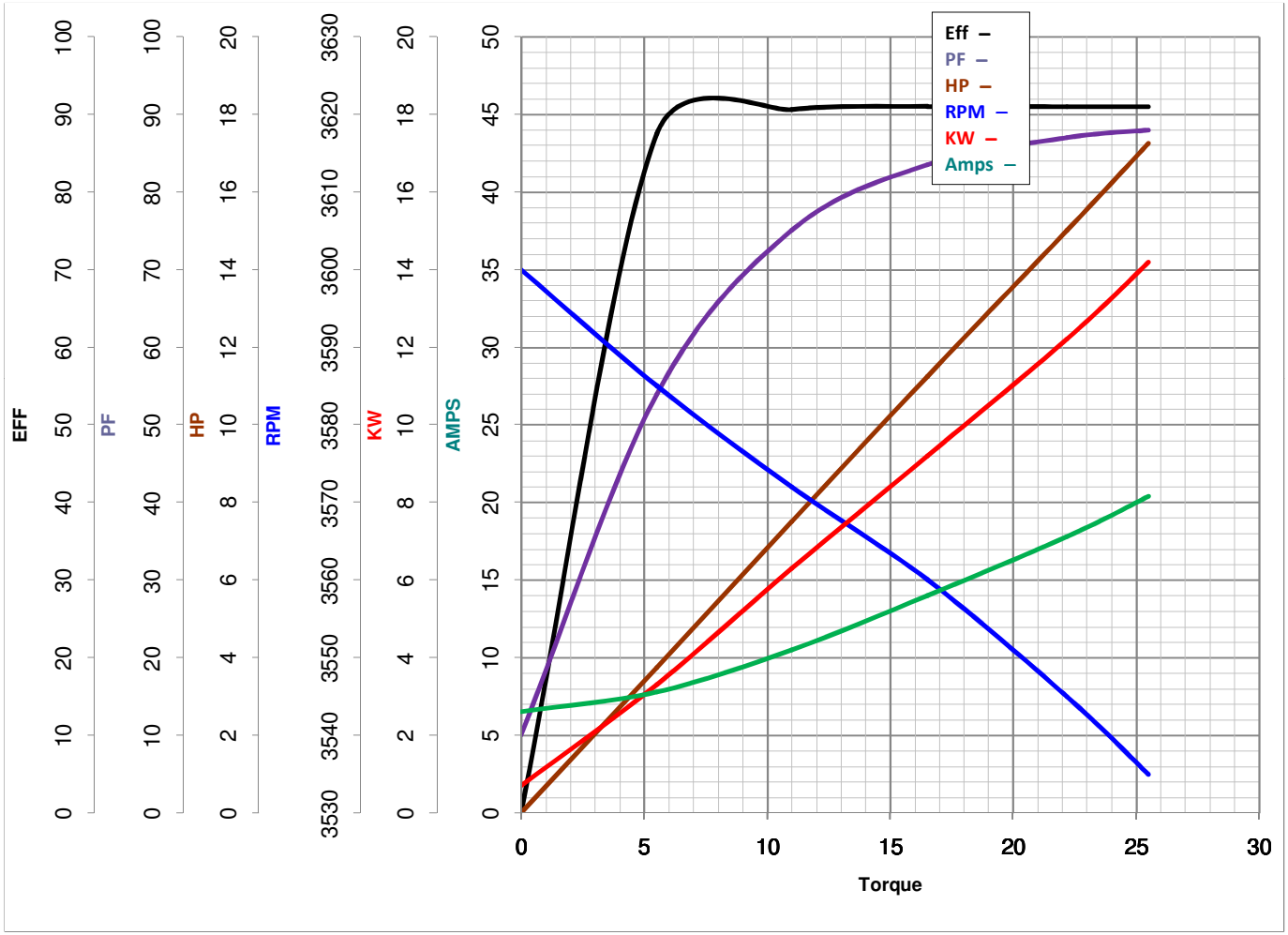

Torque in Lb.Ft

FL TORQUE	22.2	**Lb.Ft**	**FL AMPS**	35.5/17.8	
BD TORQUE	60.0	**Lb.Ft**	**PU TORQUE**	31.5	**Lb.Ft**
LR TORQUE	37	**Lb.Ft**	**LR AMPS**	114	
WINDING	HE31602008-2	**Prepared By** FAREEDA	**Date**	**5/4/2018**	