marathon®

Multispeed Motors

Model No: 254TTDX7201
Catalog No: Y470

Multispeed Motor, 7.50 & 1.88 HP, 3 Ph, 60 & 60 Hz, 460 & 460 V, 1800 RPM, 254T Frame, DP

©2026 Marathon, All Rights Reserved.

marathon®

Product Information Packet: Model No: 254TTDX7201, Catalog No: Y470 Multispeed Motor, 7.50 & 1.88 HP, 3 Ph, 60 & 60 Hz, 460 & 460 V, 1800 RPM, 254T Frame, DP

Nameplate Specifications

Phase	**3**	Output HP	**7.50 & 1.88 Hp**
Output KW	**5.6 & 1.4 kW**	Voltage	**460 & 460 V**
Speed	**1765 & 880 r/min**	Synchronous RPM	**1800 & 900 r/min**
Service Factor	**1.15 & 1.15**	Frame	**254T**
Enclosure	**Drip Proof**	Thermal Protection	**No Protection**
Efficiency	**85.5 & 72.5 %**	Ambient Temperature	**40 °C**
Frequency	**60 & 60 Hz**	Current	**10.5 & 4.1 A**
Power Factor	**80**	Duty	**Continuous**
Insulation Class	**B**	Design Code	**2VT**
KVA Code	**J**	Drive End Bearing Size	**6309**
Opp Drive End Bearing Size	**6208**	UL	**Recognized**
CSA	**Y**	CE	**Y**
IP Code	**12**	Number of Speeds	**2**

Technical Specifications

Electrical Type	**Squirrel Cage Induction Run**	Starting Method	**Across The Line**
Poles	**4//8**	Rotation	**Reversible**
Resistance Main	**2.02 O**	Mounting	**Rigid Base**
Motor Orientation	**Horizontal**	Drive End Bearing	**Ball**
Opp Drive End Bearing	**Ball**	Frame Material	**Rolled Steel**
Shaft Type	**T**	Overall Length	**20.57 in**
Shaft Diameter	**1 5/8 in**	Shaft Extension	**4.19 in**
Assembly/Box Mounting	**F1/F2 Capable**		

Drawings

Connection Drawing	**A-EE7317**	Outline Drawing	**A-SS86503-1370**

This is an uncontrolled document once printed or downloaded and is subject to change without notice. Date Created: 16/10/2026

SS86503

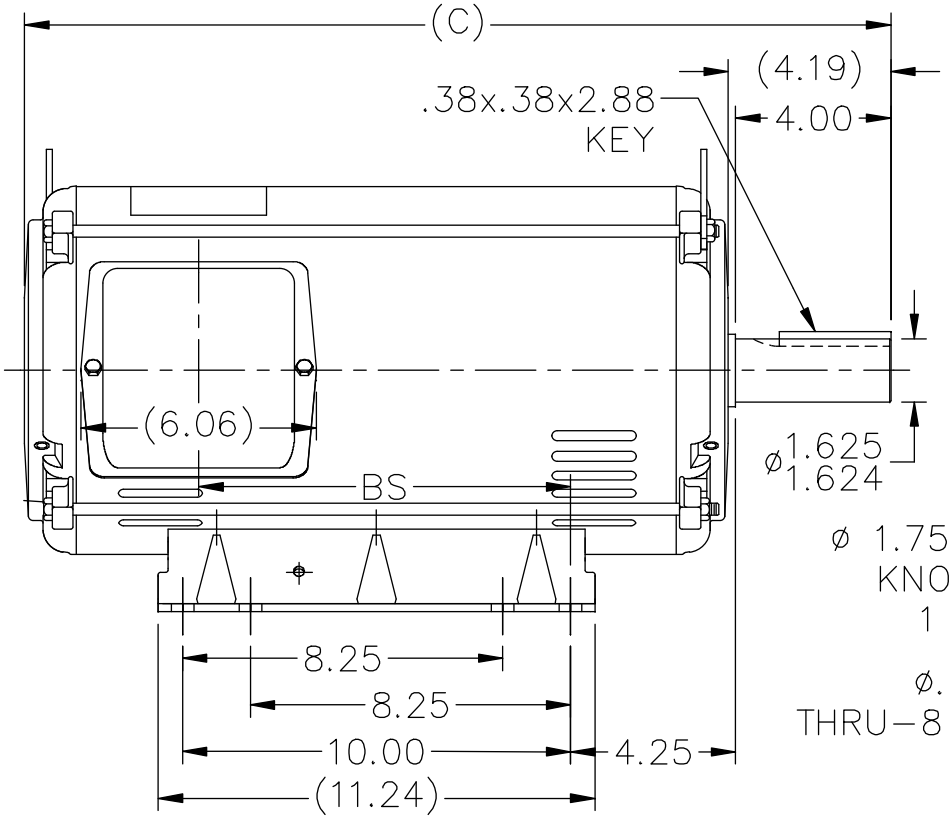

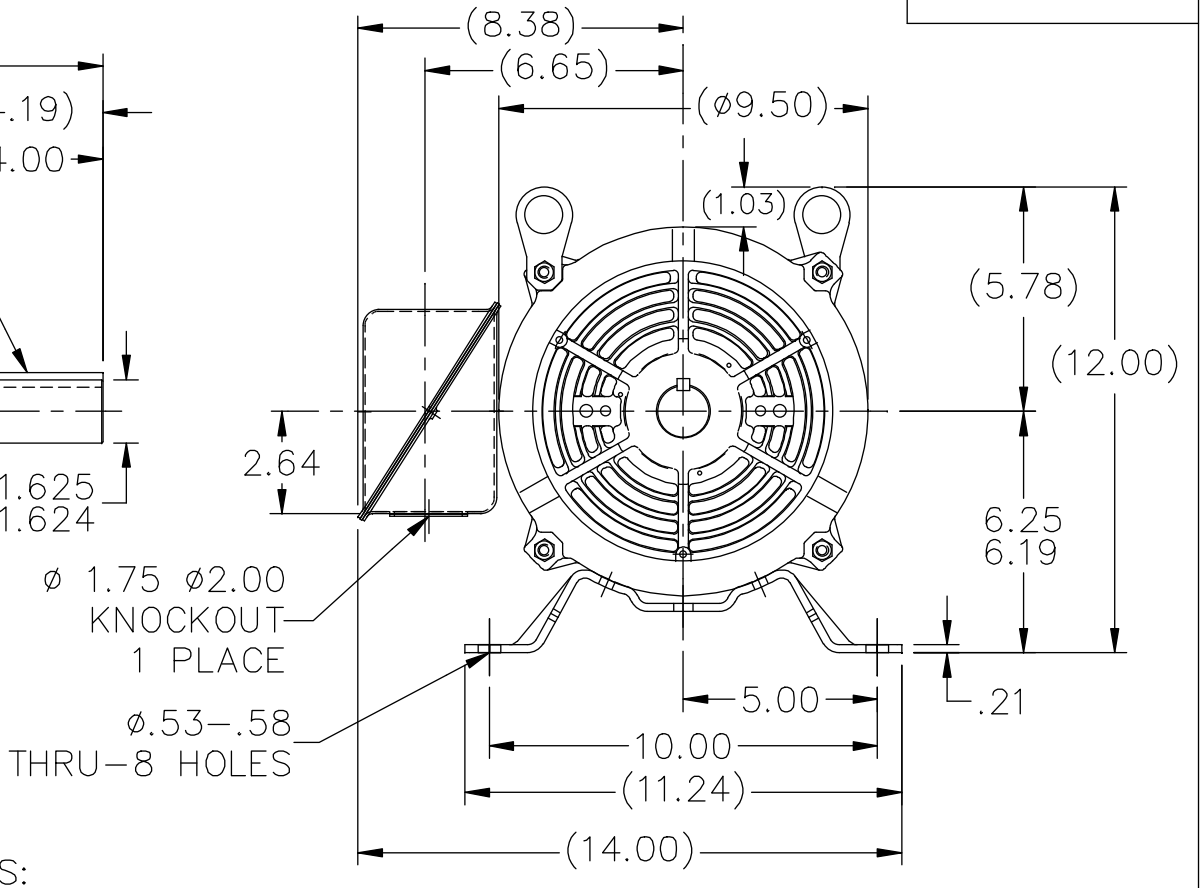

NOTES:

1. NAMEPLATE TO BE READ FROM C'BOX SIDE OF MOTOR.
2. BOX CAN BE MOUNTED IN 90° STEPS.
3. BOX CAN BE MOUNTED ON OPPOSITE SIDE BY REMOVING BRACKETS AND TURNING FRAME 180°. (EXCEPT AS NOTED.)
4. F2 MOUNT –USES 2ND HOLE ON 1370 FRAME.

DASH	FR.	C	BS	MOUNTING
1370	254T	20.57	7.68	F1 OR F2
1545	254T/256T	22.32	9.43	F1 OR F2

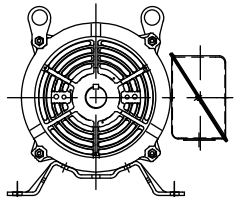

F2 VIEW

NO.	REVISION	BY & DATE	CHK
8	ADDED F2 VIEW	UD 11/13/13	GR
7	UPDATED DRAWING	TJW 04/27/2007	
6	REDRAWN IN AUTOCAD	TAT 05-19-2005	ML
5	UPDATED CONDUIT BOX CN 28427	TJB 01-31-2000	
4	ADDED NOTE #4 FOR F2 MOUNT CN 24000-581	MH 06-10-1997	
3	DASH 1545 WAS FOR 256T FR. ONLY CN 18683	KL 09-12-1994	

TOLERANCES UNLESS SPECIFIED

	DEC.	INCHES
	.X	±.1
	.XX	±.03
	.XXX	±.005
	.XXXX	±.0005
ANG		±7'30"

MARATHON ELECTRIC

TITLE OUTLINE
250 FR. – BB – DR.PR.

MAT'L.

FINISH

CAD FILE ss86503

RFP

DIST LB

DRAWN	SMC 04-22-1993
CHK	MOL 04-23-1993
APPD	DRN 09-13-1993
SCALE	1=5
REF	
FMF	
PREV	

SIZE	DRAWING NO. PAGE OF	REV.
A	SS86503	8

THIS DRAWING IN DESIGN AND DETAIL IS OUR PROPERTY AND MUST NOT BE USED EXCEPT IN CONNECTION WITH OUR WORK ALL RIGHTS OF DESIGN AND INVENTION ARE RESERVED
THIS IS AN ELECTRONICALLY GENERATED DOCUMENT – DO NOT SCALE THIS PRINT

11/13/2013 6:35:42 AM - Converted by Connexus

LOW SPEED

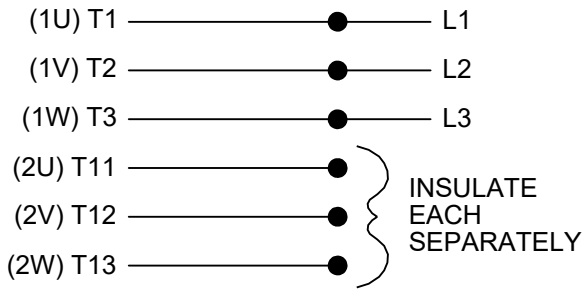

HIGHSPEED

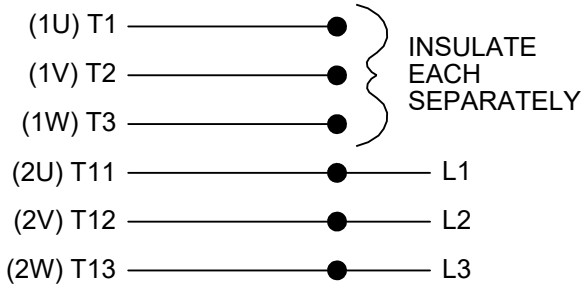

TO REVERSE ROTATION ON EITHER SPEED: INTERCHANGE ANY 2 LEADS ON THE WINDING IN USE.

THREE PHASE, SINGLE VOLT, 6 LEAD 2 SPEED REVERSIBLE MOTOR

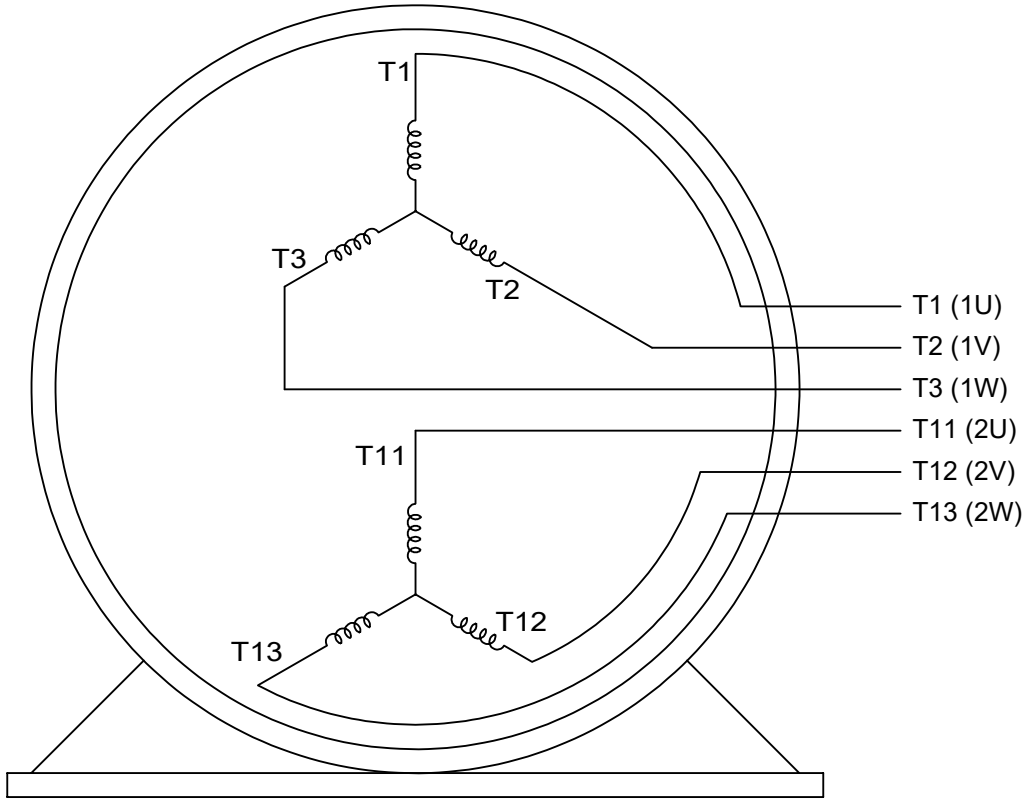

VIEW OF TERMINAL END

DRAWING REVISION D	REVISION BY SB	REV DATE/© DATE 10/08/2025	PRIMARY DIMENSIONS ARE INCH mm DIMENSIONS IN [BRACKETS] ARE FOR REFERENCE ONLY	DRAWN BY LZ	marathon™
REQUEST NUMBER CR-0024284	APPROVED BY RMS	DATE 10/08/2025		DATE 01-05-1994	
REQUEST NUMBER DESCRIPTION DRAWING TITLE BLOCK UPDATED				APPROVED BY GK	DESCRIPTION CONN DIAGRAM-INTERNAL 3 PHASE - SINGLE - 2 SPEED REVERSIBLE
				DATE 01-17-1994	
				REFERENCE	MATERIAL / PROCESS/FINISH
				THIRD ANGLE PROJECTION	SIZE A / DRAWING NUMBER EE7317 / SHEET 1 OF 1

COPYRIGHT (PER REVISION DATE) MARATHON ELECTRIC, LLC. ALL RIGHTS RESERVED. PROPRIETARY AND CONFIDENTIAL INFORMATION - THIS DOCUMENT IS THE PROPERTY OF MARATHON ELECTRIC, LLC. ("OWNER") AND CONTAINS OWNER'S PROPRIETARY INFORMATION. ANY PERSON, CORPORATION OR OTHER FIRM RECEIVING IT IS DEEMED, BY RECEIVING IT, TO AGREE THAT IT, AND/OR ANY PART OF IT, SHALL NOT BE DISCLOSED TO ANY PERSON, CORPORATION OR OTHER ENTITY, DUPLICATED, AND/OR USED, EXCEPT AS EXPRESSLY APPROVED IN WRITING IN ADVANCE BY OWNER. THIS DOCUMENT SHALL BE RETURNED TO OWNER UPON REQUEST. IT MAY BE SUBJECT TO CERTAIN RESTRICTIONS UNDER APPLICABLE EXPORT CONTROL LAWS AND REGULATIONS.

Uncontrolled Copy

CERTIFICATION DATA SHEET

Model#:	254TTDX7201 AB	**WINDING#:**	215(4-8)72 NONE 1
CONN. DIAGRAM:	A-EE7317	**ASSEMBLY:**	F1/F2 CAPABLE
OUTLINE:	A-SS86503-1370		

TYPICAL MOTOR PERFORMANCE DATA

HP	KW	SYNC. RPM	F.L. RPM	FRAME	ENCLOSURE	KVA CODE	DESIGN
7 1/2&1 7/8	5.6&1.4	900	1765&880	254T	DP	J	2VT

PH	Hz	VOLTS	FL AMPS	START TYPE	DUTY	INSL	S.F	AMB°C	ELEVATION
3	60/60	460	10.5&4.1	ACROSS THE LINE	CONTINUOUS	B3	1.15/1.15	40	3300

FULL LOAD EFF: 85.5&72.5	3/4 LOAD EFF: 69	1/2 LOAD EFF: 62	GTD. EFF	ELEC. TYPE	NO LOAD AMPS
FULL LOAD PF: 80&55.5	3/4 LOAD PF: 47	1/2 LOAD PF: 36	67	SQ CAGE IND RUN	3.6

F.L. TORQUE	LOCKED ROTOR AMPS	L.R. TORQUE	B.D. TORQUE	F.L. RISE°C
11.3 LB-FT	20	24.5 LB-FT 217	36 LB-FT 319	65

SOUND PRESSURE @ 3 FT.	SOUND POWER	ROTOR WK^2	MAX. WK^2	SAFE STALL TIME	STARTS /HOUR	APPROX. MOTOR WGT
63 dBA	73 dBA	0.7 LB-FT^2	- LB-FT^2	10 SEC.	-	100 LBS.

*** SUPPLEMENTAL INFORMATION ***

DE BRACKET TYPE	ODE BRACKET TYPE	MOUNT TYPE	ORIENTATION	SEVERE DUTY	HAZARDOUS LOCATION	DRIP COVER	SCREENS	PAINT
STANDARD	STANDARD	RIGID	HORIZONTAL	FALSE	NONE	FALSE	NONE	GRAY (ENAMEL)

BEARINGS		GREASE	SHAFT TYPE	SPECIAL DE	SPECIAL ODE	SHAFT MATERIAL	FRAME MATERIAL
DE	OPE						
BALL	BALL	POLYREX EM	T	NONE	NONE	1045 HOT ROLLED (C-204)	ROLLED STEEL
6309	6208						

THERMO-PROTECTORS				THERMISTORS	CONTROL	SPACE /n HEATERS
THERMOSTATS	PROTECTORS	WDG RTDs	BRG RTDs			
NONE	NOT	NONE	NONE	NONE	FALSE	NONE VOLTS

If Inverter equals NONE, contact factory for further information

INVERTER TORQUE: NONE
INV. HP SPEED RANGE: NONE

ENCODER: NONE
NONE NONE
NONE NONE PPR

BRAKE: NONE NONE
NONE P/N NONE
NONE NONE
NONE FT-LB NONE V NONE Hz

*
N
O
T
E
S
*

DATE: 06/21/2017 09:49:06 AM
FORM 3531 REV.3 02/07/99
** Subject to change without notice.