marathon®

Inverter (Vector) Duty Motors

Model No: 254TPFSA10088
Catalog No: SY010

Inverter (Vector) Duty Motor, 15 HP, 3 Ph, 120 Hz, 460 V, 1800 RPM, 254TC Frame, TEFC

©2026 Marathon, All Rights Reserved.

marathon®

Product Information Packet: Model No: 254TPFSA10088, Catalog No: SY010 Inverter (Vector) Duty Motor, 15 HP, 3 Ph, 120 Hz, 460 V, 1800 RPM, 254TC Frame, TEFC

Nameplate Specifications

Phase	**3**	Output HP	**15 Hp**
Output KW	**11.2 kW**	Voltage	**460 V**
Speed	**1800 r/min**	Synchronous RPM	**1800 r/min**
Service Factor	**1.00**	Frame	**254TC**
Enclosure	**Totally Enclosed Fan Cooled**	Thermal Protection	**Thermostat**
Efficiency	**94 %**	Ambient Temperature	**40 °C**
Frequency	**120 Hz**	Current	**18.0 A**
Power Factor	**80**	Duty	**Continuous**
Insulation Class	**H1**	Design Code	**PM**
KVA Code	**N/A**	Drive End Bearing Size	**6309**
Opp Drive End Bearing Size	**6210**	UL	**Recognized**
CSA	**Y**	CE	**N**
IP Code	**54**	Number of Speeds	**1**

Technical Specifications

Electrical Type	**AC Permament Magnet**	Starting Method	**Inverter Only**
Poles	**8**	Rotation	**Reversible**
Resistance Main	**0 O**	Mounting	**Rigid Base**
Motor Orientation	**Horizontal**	Drive End Bearing	**Ball**
Opp Drive End Bearing	**Ball**	Frame Material	**Cast Iron**
Shaft Type	**T**	Overall Length	**25.68 in**
Frame Length	**12.25 in**	Shaft Diameter	**1 5/8 in**
Shaft Extension	**3.75 in**	Assembly/Box Mounting	**F1 Only**
Inverter Load	**Constant 20:1**		

Drawings

Connection Drawing	**EE7300T**	Outline Drawing	**SS203152-1225**

This is an uncontrolled document once printed or downloaded and is subject to change without notice. Date Created: 15/10/2026

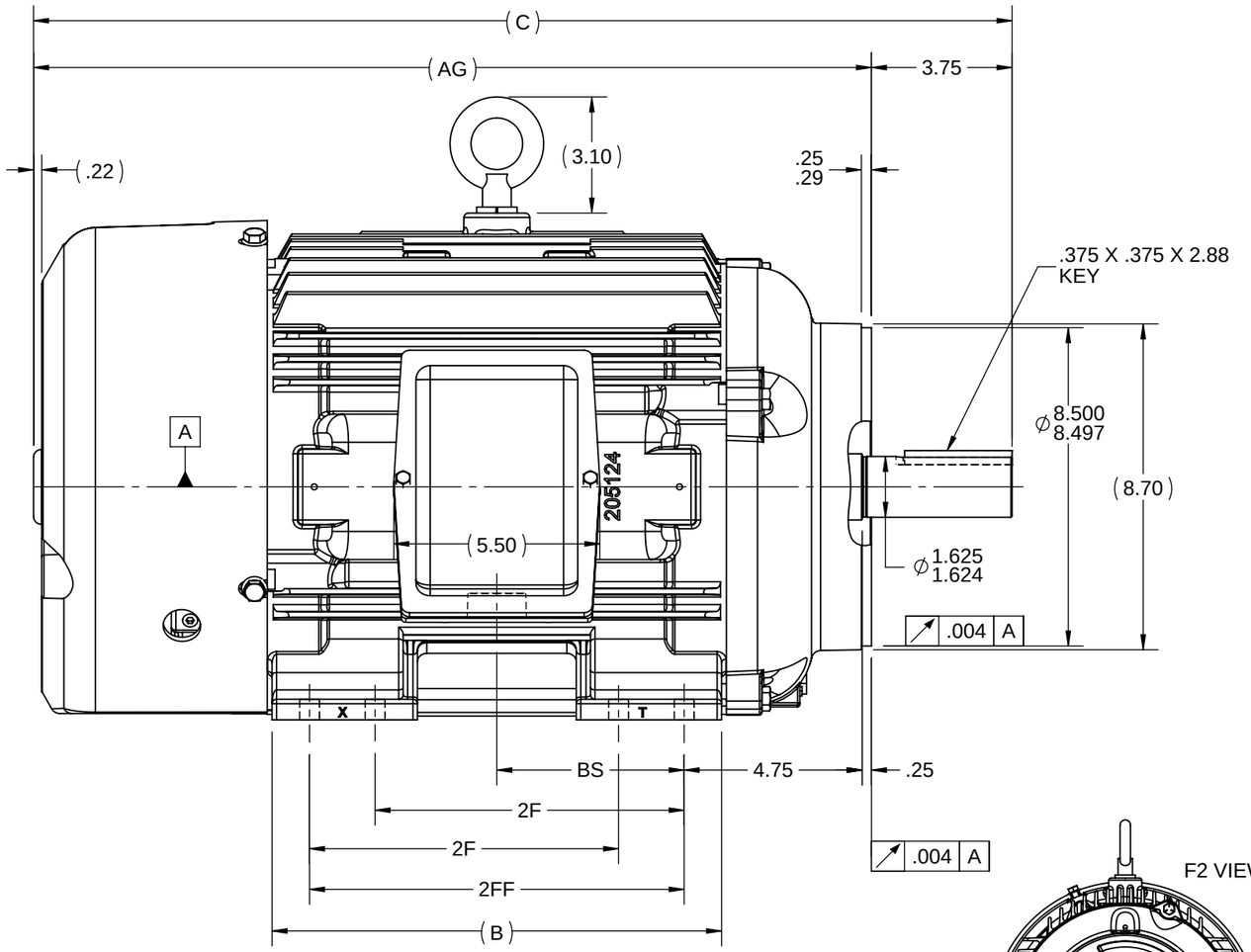

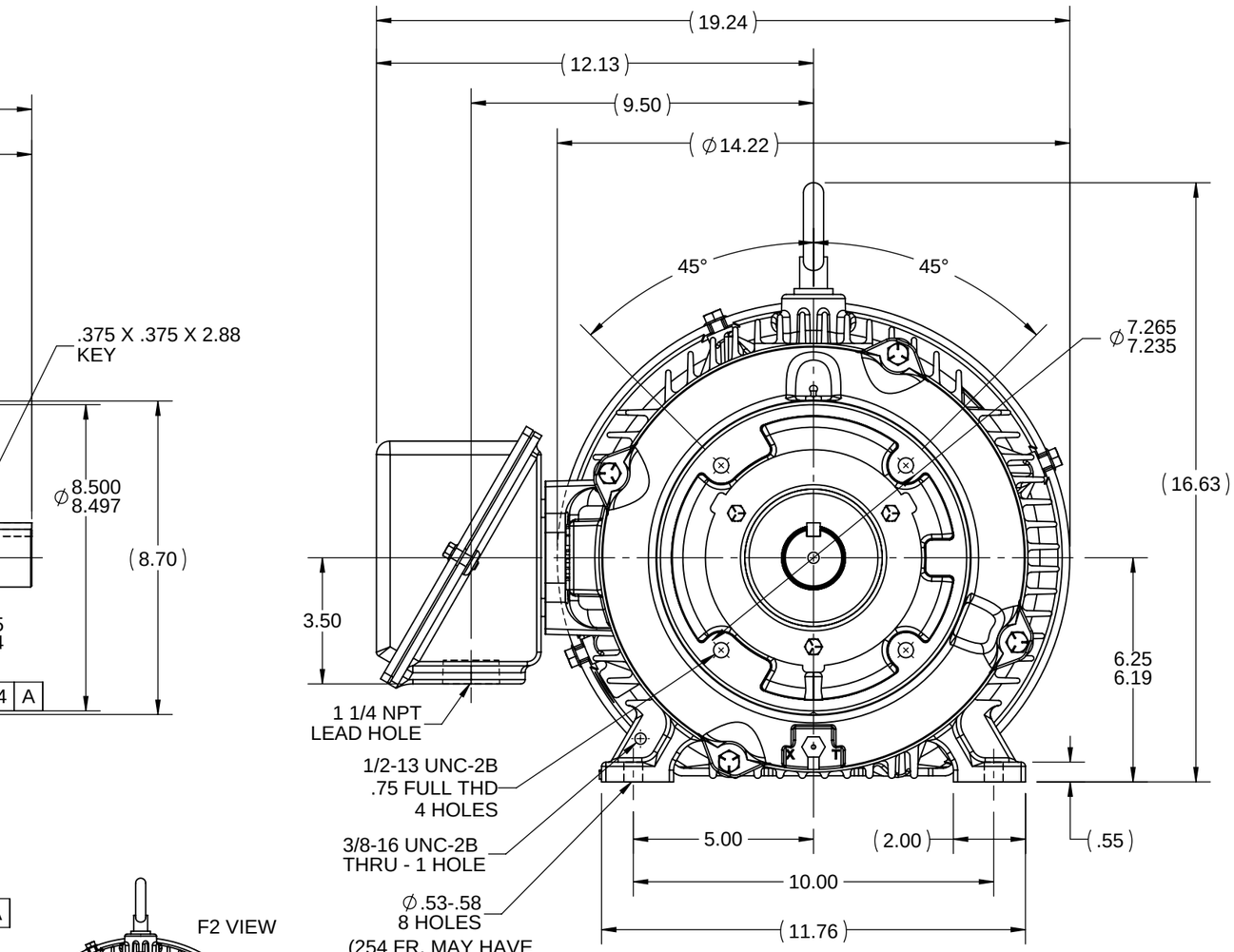

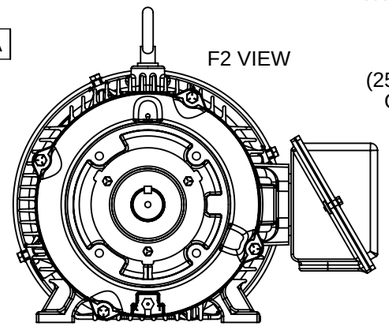

NOTES:
1. CONDUIT BOX CAN BE ROTATED IN 90° STEPS.
2. CONDUIT BOX CAN BE MOUNTED ON OPPOSITE SIDE BY REMOVING BRACKETS AND TURNING FRAME 180°. (NOT FIELD MODIFIFIABLE ON PMAC MOTORS)
3. NAMEPLATES TO BE READ FROM CONDUIT BOX SIDE OF MOTOR.

DASH	FRAME	B	C	AG	2F	2FF	BS
1050	254TC	10.25	24.37	20.61	8.25	-------	4.12
1225	254/256TC	12.00	26.12	22.36	8.25	10.00	5.00

DRAWING REVISION	REVISION BY	REV DATE/© DATE
K	SV	05/21/2026
REQUEST NUMBER	APPROVED BY	DATE
CR-0026353	RMS	05/21/2026

REQUEST NUMBER DESCRIPTION
DRAWING TITLE BLOCK UPDATED

COPYRIGHT (PER REVISION DATE) MARATHON ELECTRIC, LLC. ALL RIGHTS RESERVED. PROPRIETARY AND CONFIDENTIAL INFORMATION - THIS DOCUMENT IS THE PROPERTY OF MARATHON ELECTRIC, LLC. ("OWNER") AND CONTAINS OWNER'S PROPRIETARY INFORMATION. ANY PERSON, CORPORATION OR OTHER FIRM RECEIVING IT IS DEEMED, BY RECEIVING IT, TO AGREE THAT IT, AND/OR ANY PART OF IT, SHALL NOT BE DISCLOSED TO ANY PERSON, CORPORATION OR OTHER ENTITY, DUPLICATED, AND/OR USED, EXCEPT AS EXPRESSLY APPROVED IN WRITING IN ADVANCE BY OWNER. THIS DOCUMENT SHALL BE RETURNED TO OWNER UPON REQUEST. IT MAY BE SUBJECT TO CERTAIN RESTRICTIONS UNDER APPLICABLE EXPORT CONTROL LAWS AND REGULATIONS.

TOLERANCES (EXCEPT AS NOTED):

DEC.	INCH	mm	ANGLE
.X	±0.1	[±3]	±7' 30"
.XX	±0.03	[±0.8]	
.XXX	±0.005	[±0.13]	
.XXXX	±0.0005	[±0.013]	

REMOVE BURRS & BREAK SHARP EDGES: .003/.015 [.08/.38] X 45°
CORNER FILLETS: R.02 [.5]
MACHINED SURFACES: 200 / INCH 5.1 / mm
mm DIMENSIONS IN [BRACKETS] ARE FOR REFERENCE ONLY

DRAWN BY	
PKG	
DATE	
09-03-1996	
APPROVED BY	
BW	
DATE	
09-06-1996	
REFERENCE	MATERIAL / PROCESS/FINISH
THIRD ANGLE PROJECTION	SIZE B / DRAWING NUMBER SS203152 / SHEET 1 OF 1

marathon™

DESCRIPTION
OUTLINE
250TC FR - TEFC - BB - TS - C'FACE - TFNA - CAST C'BOX

THREE PHASE - SINGLE VOLTAGE
MOTOR - CONDUIT BOX @ 'A'

TO REVERSE ROTATION:
INTERCHANGE ANY TWO LINE
LEAD CONNECTIONS

NOTE FOR FACTORY USE ONLY:
TO SURGE TEST:
FOR 3 LEAD COMMON CONNECT:
CONNECT P1 TO T1 THEN P2 TO L1
FOR 6 LEAD COMMON CONNECT:
CONNECT P1 TO BOTH T1
THEN P2 TO L1

TERMINIAL BLOCK WHEN SPECIFIED

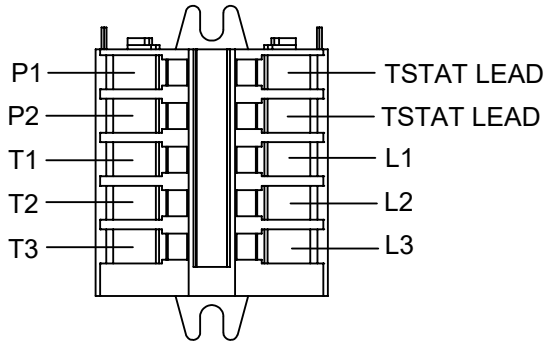

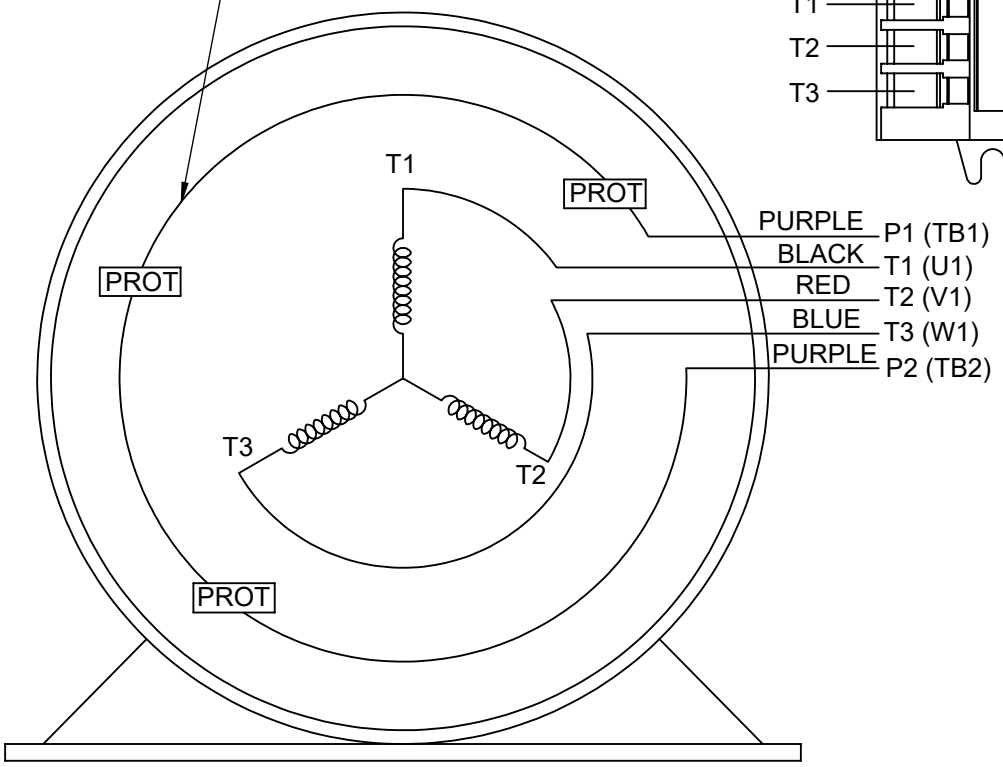

VIEW OF TERMINAL END

IF MOTOR HAS MULTIPLE
T'S PER LEAD CONNECT
TOGETHER LIKE T'S

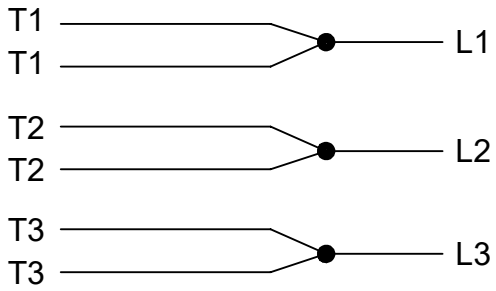

A-9806 DECAL

T2BM
T6AW
T6AL
T6Z
T4EG
T4BF
T8A
T6H
T6A
T4AX
T4A
T2A
T2F

DRAWING REVISION AC	REVISION BY SB	REV DATE/© DATE 08/01/2025	PRIMARY DIMENSIONS ARE INCH mm DIMENSIONS IN [BRACKETS] ARE FOR REFERENCE ONLY	DRAWN BY LZ	marathon™
REQUEST NUMBER CR-0023654	APPROVED BY SBD	DATE 08/01/2025		DATE 01-04-1994	DESCRIPTION CONN DIAGRAM-EXTERNAL 3Ø-SINGLE VOLT-MOTOR WITH PROTECTOR
REQUEST NUMBER DESCRIPTION DRAWING TITLE BLOCK UPDATED				APPROVED BY GK	
				DATE 01-20-1994	
				REFERENCE	MATERIAL / PROCESS/FINISH
				THIRD ANGLE PROJECTION	SIZE A / DRAWING NUMBER EE7300T / SHEET 1 OF 1

COPYRIGHT (PER REVISION DATE) MARATHON ELECTRIC, LLC. ALL RIGHTS RESERVED. PROPRIETARY AND CONFIDENTIAL INFORMATION - THIS DOCUMENT IS THE PROPERTY OF MARATHON ELECTRIC, LLC. ("OWNER") AND CONTAINS OWNER'S PROPRIETARY INFORMATION. ANY PERSON, CORPORATION OR OTHER FIRM RECEIVING IT IS DEEMED, BY RECEIVING IT, TO AGREE THAT IT, AND/OR ANY PART OF IT, SHALL NOT BE DISCLOSED TO ANY PERSON, CORPORATION OR OTHER ENTITY, DUPLICATED, AND/OR USED, EXCEPT AS EXPRESSLY APPROVED IN WRITING IN ADVANCE BY OWNER. THIS DOCUMENT SHALL BE RETURNED TO OWNER UPON REQUEST. IT MAY BE SUBJECT TO CERTAIN RESTRICTIONS UNDER APPLICABLE EXPORT CONTROL LAWS AND REGULATIONS.

Data Sheet

Date:	8/3/2022	**Model:**	254TPFSA10088
Customer:		**Catalog:**	SY010
Attention:		**Winding:**	PM25608009
Submitted by:	SHERYL KUEHMICHEL	**Submittal Data @**	460 V

Motor Load Data

Load	0%	25%	50%	75%	100%	115%	125%	150%	
Current (Amps)	2	4.7	8.9	13.1	18	20.9	22.9	30.4	
Torque (ft-lb)	0.0	10.9	21.9	32.8	43.8	50.3	54.7	65.6	
Efficiency (%)		91.0	93.5	94.1	94.0	93.6	93.5	92.5	

Motor Speed Data

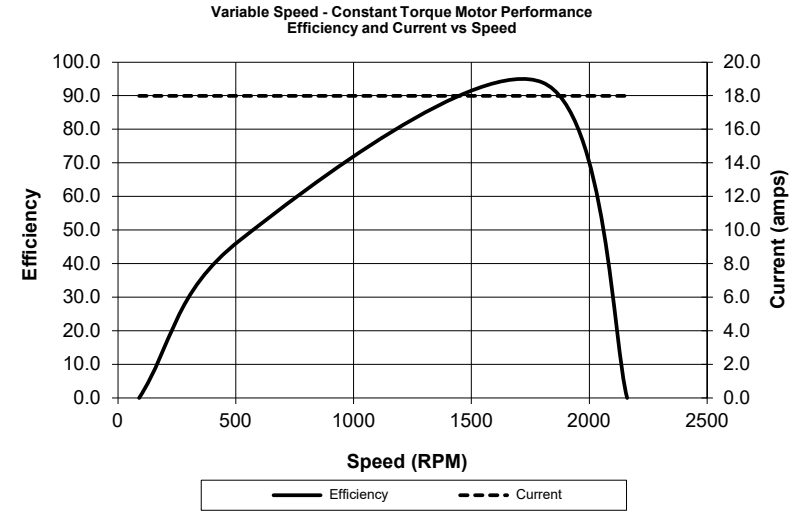

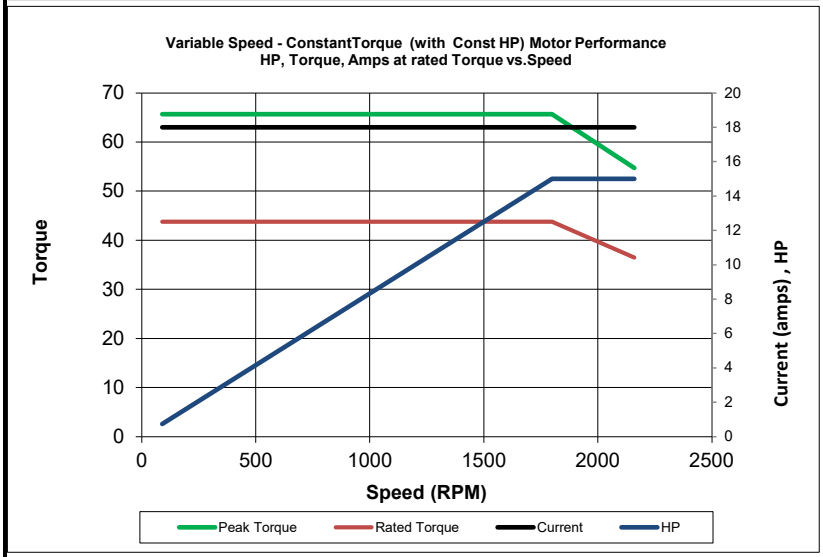

Motor Characteristics

HP	15.00	
Sync. RPM	1800	
Frame	256	
Enclosure	TEFC	
Construction Type	TFN	
Voltage	460	V
Frequency	120	Hz
Motor P.F. (%)	80.0	
Reserve Tq Capability	150	%
Temp Rise @ FL	60	° C
Insulation Class	H	
Duty	CONT	
Ambient	40	° C
Elevation	3,300	feet
Ref Wdg	PM25608009	R1
Sound Pressure @ 1m	65	dBA
Motor Wgt	286	Lb
Rotor/Shaft wk²	1.96	Lb-Ft²
CT Speed Range	20	:1
VT Speed Range	2000	:1
Outline Dwg		
Conn. Diag		
DE Bearing		
ODE Bearing		

Additional Specifications:

PWM variable frequency electronic drive that is
permanent magnet motor capable required for operation.
Motor efficiency reflects operation on a VFD

R / phase (ohms)	Ld (mH)	Lq (mH)	BEMF (V/krpm)
0.293	9.08	14.6	222

Constant Torque (Constant Power) Load Points

Hz	RPM	HP	ft-lb	Amps	Eff	Pk Tq
6	90	0.75	43.8	18	0	65.70
120	1800	15.0	43.8	18	94	65.70
144	2160	15.0	36.5	18	0	54.75

Uncontrolled Copy

CERTIFICATION DATA SHEET

Model#:	254TPFSA10088 A	**WINDING#:**	PM25608009 R1 1
CONN. DIAGRAM:	A-EE7300	**ASSEMBLY:**	F1/F2 CAPABLE
OUTLINE:	B-SS203152-1225		

TYPICAL MOTOR PERFORMANCE DATA

HP	KW	SYNC. RPM	F.L. RPM	FRAME	ENCLOSURE	KVA CODE	DESIGN
15	11.2	1800	1800	254TC	TEFC	NO KVA CODE	PM

PH	Hz	VOLTS	FL AMPS	START TYPE	DUTY	INSL	S.F	AMB°C	ELEVATION
3	120	460	18	INVERTER ONLY	CONTINUOUS	H1	1.0	40	3300

FULL LOAD EFF: 94	3/4 LOAD EFF: -	1/2 LOAD EFF: -	GTD. EFF	ELEC. TYPE	NO LOAD AMPS
FULL LOAD PF: 80	3/4 LOAD PF: -	1/2 LOAD PF: -	94	AC PERMANENT MAGNET	1.5

F.L. TORQUE	LOCKED ROTOR AMPS	L.R. TORQUE	B.D. TORQUE	F.L. RISE°C
43.77 LB-FT	-	- LB-FT -	- LB-FT -	60

SOUND PRESSURE @ 3 FT.	SOUND POWER	ROTOR WK^2	MAX. WK^2	SAFE STALL TIME	STARTS /HOUR	APPROX. MOTOR WGT
65 dBA	75 dBA	1.96 LB-FT^2	0 LB-FT^2	0 SEC.	0	286 LBS.

EQUIVALENT WYE CKT.PARAMETERS (OHMS PER PHASE)

R1	R2	X1	X2	XM
0	0.073	2.27	3.65	111

RM	ZREF	XR	TD	TD0
0	1	0	0	0

*** SUPPLEMENTAL INFORMATION ***

DE BRACKET TYPE	ODE BRACKET TYPE	MOUNT TYPE	ORIENTATION	SEVERE DUTY	HAZARDOUS LOCATION	DRIP COVER	SCREENS	PAINT
C-FACE	STANDARD	RIGID	HORIZONTAL	PREMIUM SEVERE DUTY	NONE	FALSE	NONE	BLACK (EPOXY)

BEARINGS		GREASE	SHAFT TYPE	SPECIAL DE	SPECIAL ODE	SHAFT MATERIAL	FRAME MATERIAL
DE	OPE						
BALL 6309	BALL 6210	POLYREX EM	T	NONE	NONE	1045 HOT ROLLED (C-204)	CAST IRON

THERMO-PROTECTORS				THERMISTORS	CONTROL	SPACE /n HEATERS
THERMOSTATS	PROTECTORS	WDG RTDs	BRG RTDs			
TSTATS 140(N/C)	NOT	NONE	NONE	NONE	FALSE	NONE VOLTS

If Inverter equals NONE, contact factory for further information

INVERTER TORQUE: CONSTANT 20:1
INV. HP SPEED RANGE: 1.2 X BASE SPEED

ENCODER: NONE
NONE NONE
NONE NONE PPR

BRAKE: NONE NONE

* NOTES *

Uncontrolled Copy

NONE	P/N NONE		
NONE	NONE		
NONE FT-LB		NONE V	NONE Hz

DATE: 06/23/2017 01:57:46 AM
FORM 3531 REV.3 02/07/99
** Subject to change without notice.