marathon®

50 Hz Motors

Model No: 215TTDW7053
Catalog No: H956

50 Hz Motor, 10 HP, 3 Ph, 50 Hz, 190-200-208/380-400-415 V, 1500 RPM, 215T Frame, DP

©2026 Marathon, All Rights Reserved.

marathon®

Product Information Packet: Model No: 215TTDW7053, Catalog No: H956 50 Hz Motor, 10 HP, 3 Ph, 50 Hz, 190-200-208/380-400-415 V, 1500 RPM, 215T Frame, DP

Nameplate Specifications

Phase	**3**	Output HP	**10 Hp**
Output KW	**7.5 kW**	Voltage	**190-200-208/380-400-415 V**
Speed	**1455 r/min**	Synchronous RPM	**1500 r/min**
Service Factor	**1.15**	Frame	**215T**
Enclosure	**Drip Proof**	Thermal Protection	**No Protection**
Efficiency	**88.7 %**	Ambient Temperature	**40 °C**
Frequency	**50 Hz**	Current	**31.0-29.5-29.2/15.5-14.7-14.6 A**
Power Factor	**83**	Duty	**Continuous**
Insulation Class	**B**	Design Code	**A**
KVA Code	**H**	Drive End Bearing Size	**6307**
Opp Drive End Bearing Size	**6206**	UL	**Recognized**
CSA	**Y**	CE	**Y**
IP Code	**22**	Number of Speeds	**1**

Technical Specifications

Electrical Type	**Squirrel Cage Induction Run**	Starting Method	**Part Wdg Start Low Volt Only & Wye Start Delta Run**
Poles	**4**	Rotation	**Reversible**
Resistance Main	**1.2 O**	Mounting	**Rigid Base**
Motor Orientation	**Horizontal**	Drive End Bearing	**Ball**
Opp Drive End Bearing	**Ball**	Frame Material	**Rolled Steel**
Shaft Type	**T**	Overall Length	**17.3 in**
Frame Length	**11.15 in**	Shaft Diameter	**1 3/8 in**
Shaft Extension	**3.47 in**	Assembly/Box Mounting	**F1/F2 Capable**

Drawings

Connection Drawing	**A-EE7358**	Outline Drawing	**A-SS86500-1115**

This is an uncontrolled document once printed or downloaded and is subject to change without notice. Date Created: 14/10/2026

Uncontrolled Copy

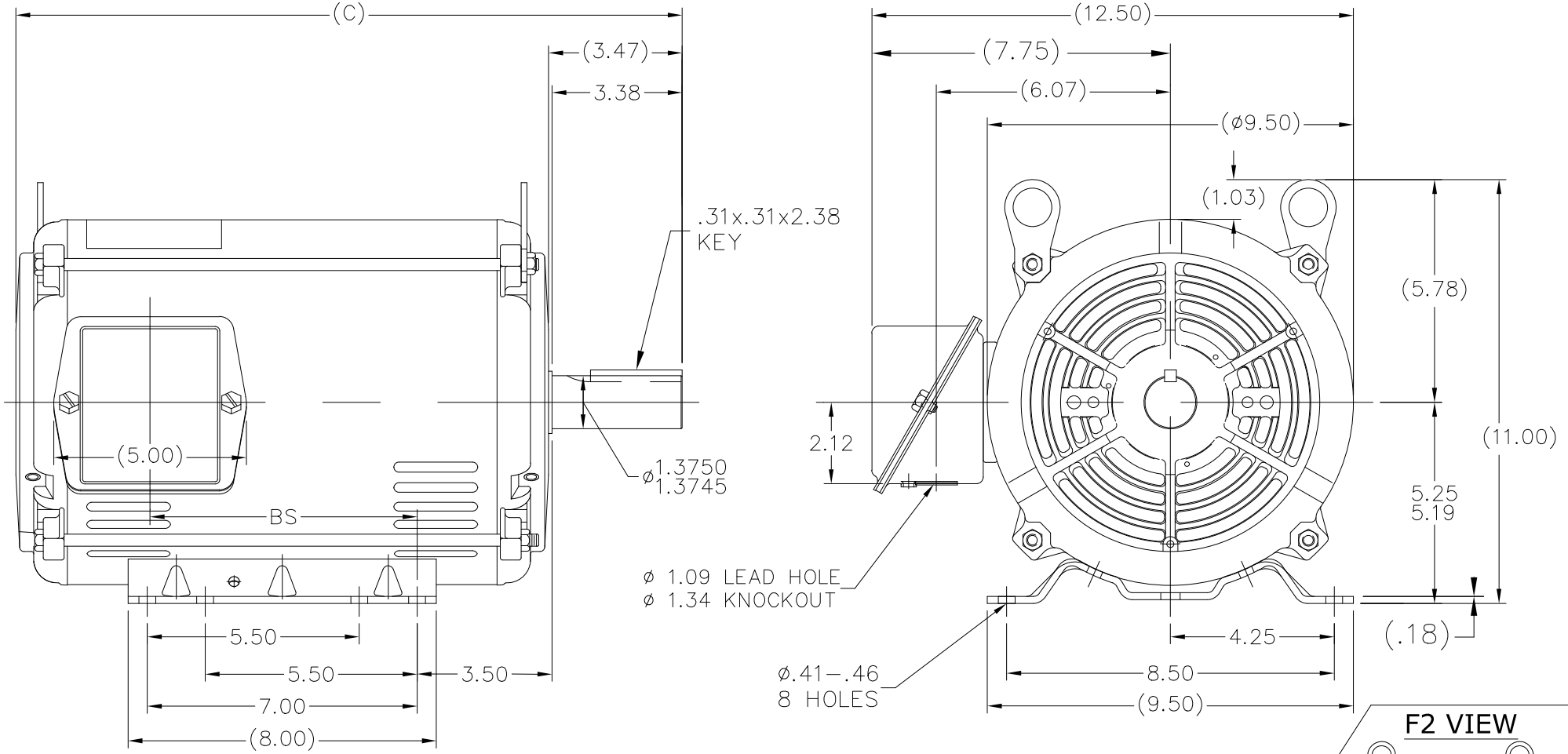

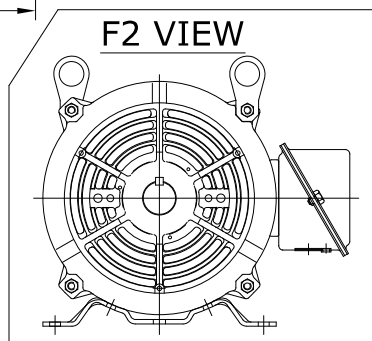

NOTES:
1. NAMEPLATE TO BE READ FROM C'BOX SIDE OF MOTOR.
2. BOX CAN BE MOUNTED IN 90° STEPS.
3. BOX CAN BE MOUNTED ON OPPOSITE SIDE BY REMOVING BRACKETS AND TURNING FRAME 180°. (EXCEPT AS NOTED.)

DASH	FR.	C	BS	MOUNTING
1115	213/15T	17.30	6.93	F1/F2
1240	213/15T	18.55	8.18	F1 ONLY

DRAWING REVISION	REVISION BY	REV DATE/ © DATE
U	SB	04/22/2026
REQUEST NUMBER	APPROVED BY	DATE
CR-0026044	RMS	04/22/2026

REQUEST NUMBER DESCRIPTION
DRAWING TITLE BLOCK UPDATED

COPYRIGHT (PER REVISION DATE) MARATHON ELECTRIC, LLC. ALL RIGHTS RESERVED. PROPRIETARY AND CONFIDENTIAL INFORMATION - THIS DOCUMENT IS THE PROPERTY OF MARATHON ELECTRIC, LLC. ("OWNER") AND CONTAINS OWNER'S PROPRIETARY INFORMATION. ANY PERSON, CORPORATION OR OTHER FIRM RECEIVING IT IS DEEMED, BY RECEIVING IT, TO AGREE THAT IT, AND/OR ANY PART OF IT, SHALL NOT BE DISCLOSED TO ANY PERSON, CORPORATION OR OTHER ENTITY, DUPLICATED, AND/OR USED, EXCEPT AS EXPRESSLY APPROVED IN WRITING IN ADVANCE BY OWNER. THIS DOCUMENT SHALL BE RETURNED TO OWNER UPON REQUEST. IT MAY BE SUBJECT TO CERTAIN RESTRICTIONS UNDER APPLICABLE EXPORT CONTROL LAWS AND REGULATIONS.

TOLERANCES (EXCEPT AS NOTED):

DEC.	INCH	mm	ANGLE
.X	±0.1	[±3]	±7' 30"
.XX	±0.03	[±0.8]	
.XXX	±0.005	[±0.13]	
.XXXX	±0.0005	[±0.013]	

REMOVE BURRS & BREAK SHARP EDGES: .003/.015 [.08/.38] X 45 °
CORNER FILLETS: R.02 [.5]
MACHINED SURFACES: 200 INCH / 5.1 mm
mm DIMENSIONS IN [BRACKETS] ARE FOR REFERENCE ONLY

DRAWN BY	SMC
DATE	04/13/1993
APPROVED BY	DRN
DATE	04/13/1993
REFERENCE	
THIRD ANGLE PROJECTION	

marathon™

DESCRIPTION
OUTLINE
210 FR - BB - TS DR. PR.

MATERIAL	PROCESS/FINISH

SIZE	DRAWING NUMBER	SHEET
A	SS86500	1 OF 1

HIGH VOLTAGE

WYE START

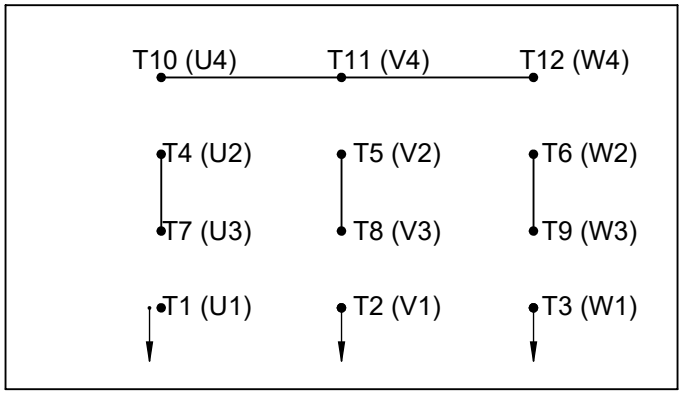

DELTA RUN

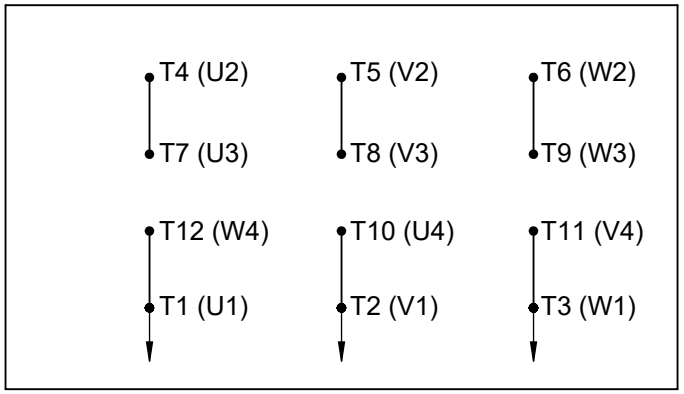

LOW VOLTAGE

WYE START

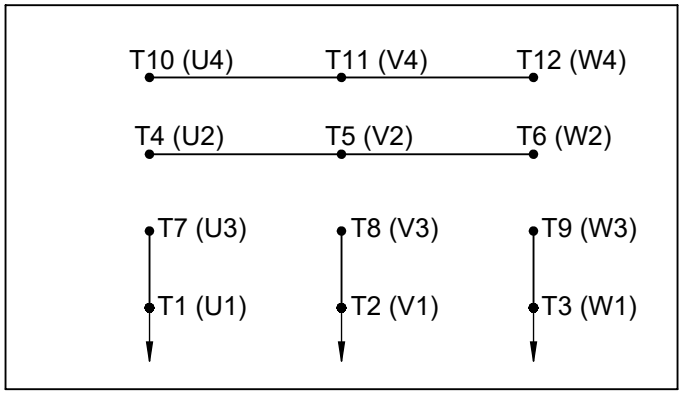

DELTA RUN

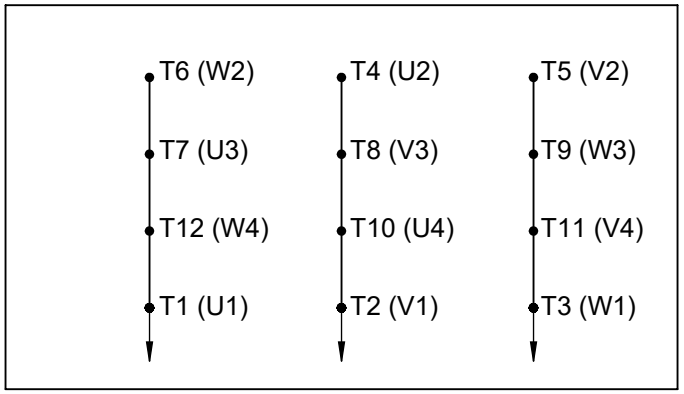

4/2 CKTY △

DRAWING REVISION	REVISION BY	REV DATE/© DATE
E	SB	08/01/2025
REQUEST NUMBER	APPROVED BY	DATE
CR-0023654	SBD	08/01/2025

REQUEST NUMBER DESCRIPTION
DRAWING TITLE BLOCK UPDATED

COPYRIGHT (PER REVISION DATE) MARATHON ELECTRIC, LLC. ALL RIGHTS RESERVED. PROPRIETARY AND CONFIDENTIAL INFORMATION - THIS DOCUMENT IS THE PROPERTY OF MARATHON ELECTRIC, LLC. ("OWNER") AND CONTAINS OWNER'S PROPRIETARY INFORMATION. ANY PERSON, CORPORATION OR OTHER FIRM RECEIVING IT IS DEEMED, BY RECEIVING IT, TO AGREE THAT IT, AND/OR ANY PART OF IT, SHALL NOT BE DISCLOSED TO ANY PERSON, CORPORATION OR OTHER ENTITY, DUPLICATED, AND/OR USED, EXCEPT AS EXPRESSLY APPROVED IN WRITING IN ADVANCE BY OWNER. THIS DOCUMENT SHALL BE RETURNED TO OWNER UPON REQUEST. IT MAY BE SUBJECT TO CERTAIN RESTRICTIONS UNDER APPLICABLE EXPORT CONTROL LAWS AND REGULATIONS.

PRIMARY DIMENSIONS ARE INCH
mm DIMENSIONS IN [BRACKETS]
ARE FOR REFERENCE ONLY

DRAWN BY	BLR
DATE	03-09-1998
APPROVED BY	GK
DATE	03-23-1998
REFERENCE	
THIRD ANGLE PROJECTION	

marathon™

DESCRIPTION
CONN DIAGRAM-EXTERNAL
12 LEAD - DUAL VOLT. - WYE START - DELTA RUN

MATERIAL	PROCESS/FINISH

SIZE	DRAWING NUMBER	SHEET
A	EE7358	1 OF 1

Data Sheet

Date: 29-06-2017
Customer:
Attention:
Submitted by: FAREEDA DUDEKULA

marathon® electric

215TTDW7053

Submittal

Data @ 415 V

Motor Load Data

Load	0%	25%	50%	75%	100%	115%	125%	LR	
Current (Amps)	5.5	6.4	8.2	11.0	14.2	16.3	17.9	85.2	
Torque (ft-lb)	0.00	9.0	18.0	27.0	36.0	41.5	45.5	53.0	
RPM	1500	1490	1480	1470	1455	1,450	1445	0	
Efficiency (%)		85.5	87.5	89.5	88.7	87.5	86.5		
P.F. (%)	7.0	48.0	69.0	79.0	83.0	84.0	85.0	44.0	

Motor Speed Data

	LR	Pull-Up	BD	Rated	Idle
Speed (RPM)	0	728	1275	1455	1500
Current (Amps)	85.2	76.6	54.9	14.2	5.5
Torque (ft-lb)	53.0	45.1	96.0	36.0	0.00

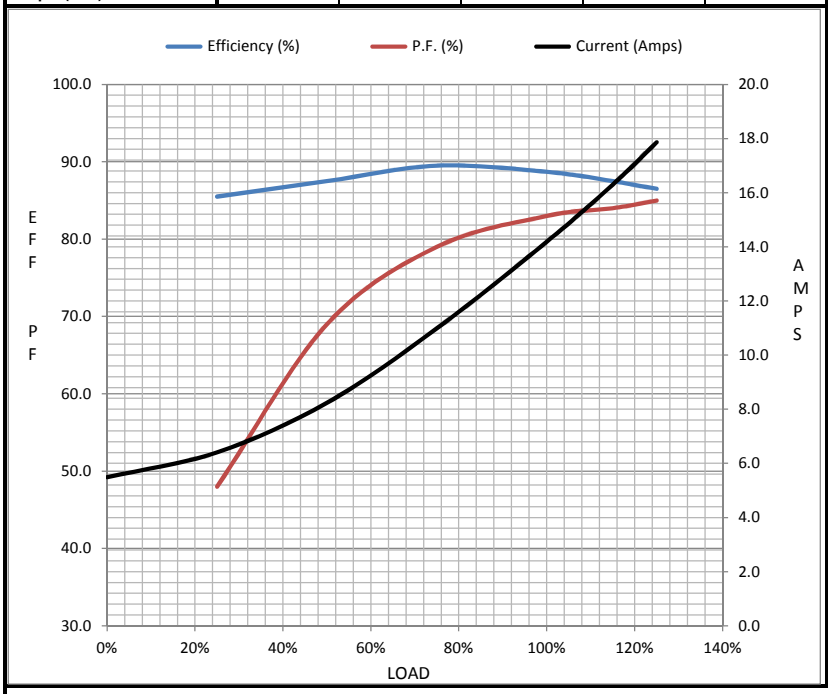

Information Block

HP	10.0
Sync. RPM	1500
Frame	215
Enclosure	DP
Construction	TDW
Voltage	200-208/380-400 V
Frequency	50 Hz
Design	B
LR Code letter	H
Service Factor	1.15
Temp Rise @ FL	60 ° C
Duty	CONT
Ambient	40 ° C
Elevation	1,000 feet
Rotor/Shaft wk²	1.00 Lb-Ft²
Ref Wdg	K2154316 NONE
Sound Pressure @ 1M	63 dBA
VFD Rating	NONE
Outline Dwg	A-SS86500-1115
Conn. Diag	A-EE7358

Additional Specifications:

0

365THFS8036

EQUIV CKT (OHMS / PHASE)

R1	R2	X1	X2	Xm
0.7500	0.5040	1.8230	2.5910	44.4250

Speed -Torque Curve

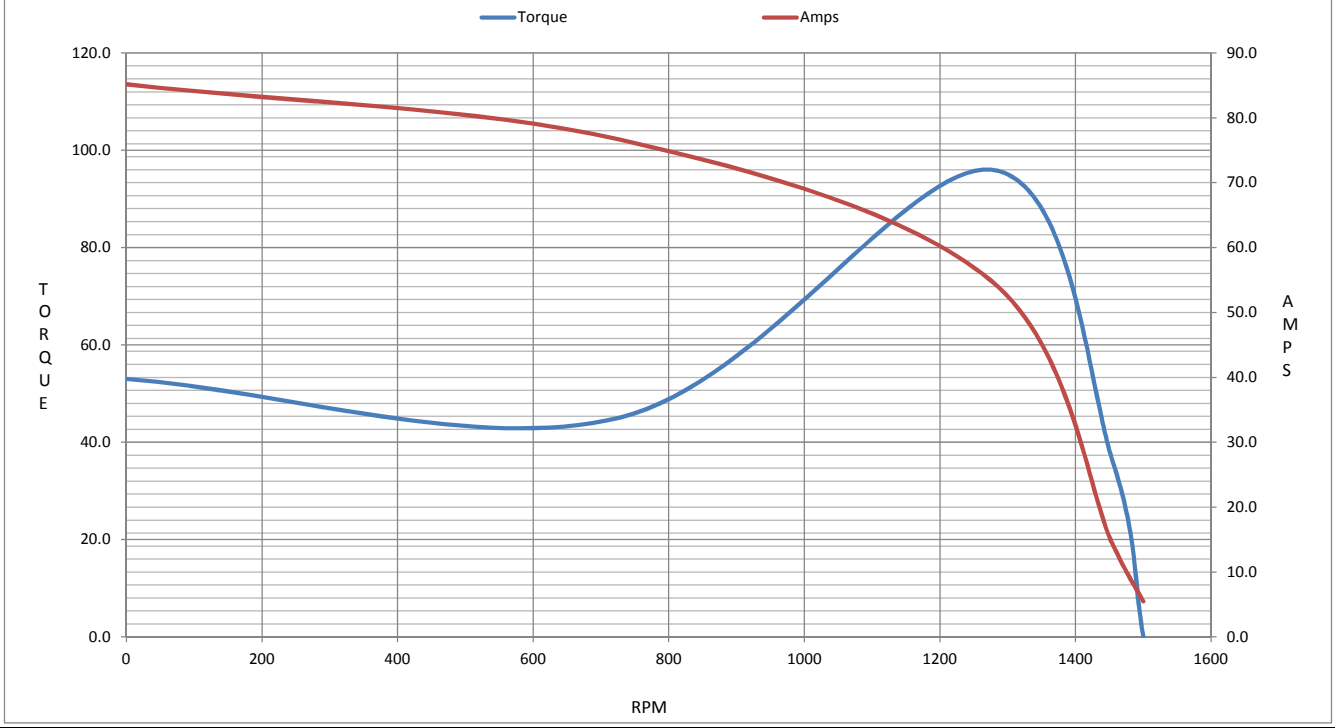

Uncontrolled Copy

CERTIFICATION DATA SHEET

Model#:	215TTDW7053 AC	**WINDING#:**	K2154316 NONE 1
CONN. DIAGRAM:	A-EE7358	**ASSEMBLY:**	F1/F2 CAPABLE
OUTLINE:	A-SS86500-1115		

TYPICAL MOTOR PERFORMANCE DATA

HP	KW	SYNC. RPM	F.L. RPM	FRAME	ENCLOSURE	KVA CODE	DESIGN
10	7.5	1500	1455	215T	DP	H	A

PH	Hz	VOLTS	FL AMPS	START TYPE	DUTY	INSL	S.F	AMB°C	ELEVATION
3	50	190-200-208/380-400-415	31-29.5-29.2/15.5-14.7-14.6	PWS(LV ONLY) & YDRUN	CONTINUOUS	B4	1.15	40	3300

FULL LOAD EFF: 88.7	3/4 LOAD EFF: 89.5	1/2 LOAD EFF: 87.5	GTD. EFF	ELEC. TYPE	NO LOAD AMPS
FULL LOAD PF: 83	3/4 LOAD PF: 79	1/2 LOAD PF: 69	86.5	SQ CAGE IND RUN	11.4 / 5.7

F.L. TORQUE	LOCKED ROTOR AMPS	L.R. TORQUE	B.D. TORQUE	F.L. RISE°C
36 LB-FT	176.7 / 88.4	53 LB-FT 147	96 LB-FT 267	60

SOUND PRESSURE @ 3 FT.	SOUND POWER	ROTOR WK^2	MAX. WK^2	SAFE STALL TIME	STARTS /HOUR	APPROX. MOTOR WGT
63 dBA	73 dBA	1 LB-FT^2	60 LB-FT^2	15 SEC.	2	125 LBS.

*** SUPPLEMENTAL INFORMATION ***

DE BRACKET TYPE	ODE BRACKET TYPE	MOUNT TYPE	ORIENTATION	SEVERE DUTY	HAZARDOUS LOCATION	DRIP COVER	SCREENS	PAINT
STANDARD	STANDARD	RIGID	HORIZONTAL	FALSE	NONE	FALSE	NONE	GRAY (ENAMEL)

BEARINGS		GREASE	SHAFT TYPE	SPECIAL DE	SPECIAL ODE	SHAFT MATERIAL	FRAME MATERIAL
DE	OPE						
BALL 6307	BALL 6206	POLYREX EM	T	NONE	NONE	AISI 1045 (C-240)	ROLLED STEEL

THERMO-PROTECTORS				THERMISTORS	CONTROL	SPACE /n HEATERS
THERMOSTATS	PROTECTORS	WDG RTDs	BRG RTDs			
NONE	NOT	NONE	NONE	NONE	FALSE	NONE VOLTS

If Inverter equals NONE, contact factory for further information

INVERTER TORQUE: NONE
INV. HP SPEED RANGE: NONE

ENCODER: NONE
NONE NONE
NONE NONE PPR

BRAKE: NONE NONE
NONE P/N NONE
NONE NONE
- FT-LB NONE V NONE Hz

*
N
O
T
E
S
*

DATE: 06/22/2017 07:31:22 AM
FORM 3531 REV.3 02/07/99
** Subject to change without notice.