marathon®

50 Hz Motors

Model No: 215TTDBD8026
Catalog No: H956A

50 Hz Motor, 10 HP, 3 Ph, 50 Hz, 200/400 V, 1500 RPM, 215T Frame, DP

©2026 Marathon, All Rights Reserved.

marathon®

Product Information Packet: Model No: 215TTDBD8026, Catalog No: H956A 50 Hz Motor, 10 HP, 3 Ph, 50 Hz, 200/400 V, 1500 RPM, 215T Frame, DP

Nameplate Specifications

Phase	**3**	Output HP	**10 Hp**
Output KW	**7.5 kW**	Voltage	**200/400 V**
Speed	**1465 r/min**	Synchronous RPM	**1500 r/min**
Service Factor	**1.15**	Frame	**215T**
Enclosure	**Drip Proof**	Thermal Protection	**No Protection**
Efficiency	**88.8 %**	Ambient Temperature	**40 °C**
Frequency	**50 Hz**	Current	**28.9/14.5 A**
Power Factor	**84.5**	Duty	**Continuous**
Insulation Class	**F**	Design Code	**B**
KVA Code	**G**	Drive End Bearing Size	**6307**
Opp Drive End Bearing Size	**6206**	UL	**Recognized**
CSA	**Y**	CE	**Y**
IP Code	**22**	Number of Speeds	**1**

Technical Specifications

Electrical Type	**Squirrel Cage Induction Run**	Starting Method	**Part Wdg Start Low Volt Only & Wye Start Delta Run**
Poles	**4**	Rotation	**Reversible**
Resistance Main	**.953 O**	Mounting	**Rigid Base**
Motor Orientation	**Horizontal**	Drive End Bearing	**Ball**
Opp Drive End Bearing	**Ball**	Frame Material	**Rolled Steel**
Shaft Type	**T**	Shaft Diameter	**1.375 in**
Assembly/Box Mounting	**F1/F2 Capable**		

Drawings

Connection Drawing	**EE7358**	Outline Drawing	**SS620684**

This is an uncontrolled document once printed or downloaded and is subject to change without notice. Date Created: 15/10/2026

B	C	D	E	2E	2F	2FF	BA	BS	MOUNTING
8.00	17.30	5.25	4.25	8.50	5.50	7.00	3.50	6.93	F1 OR F2

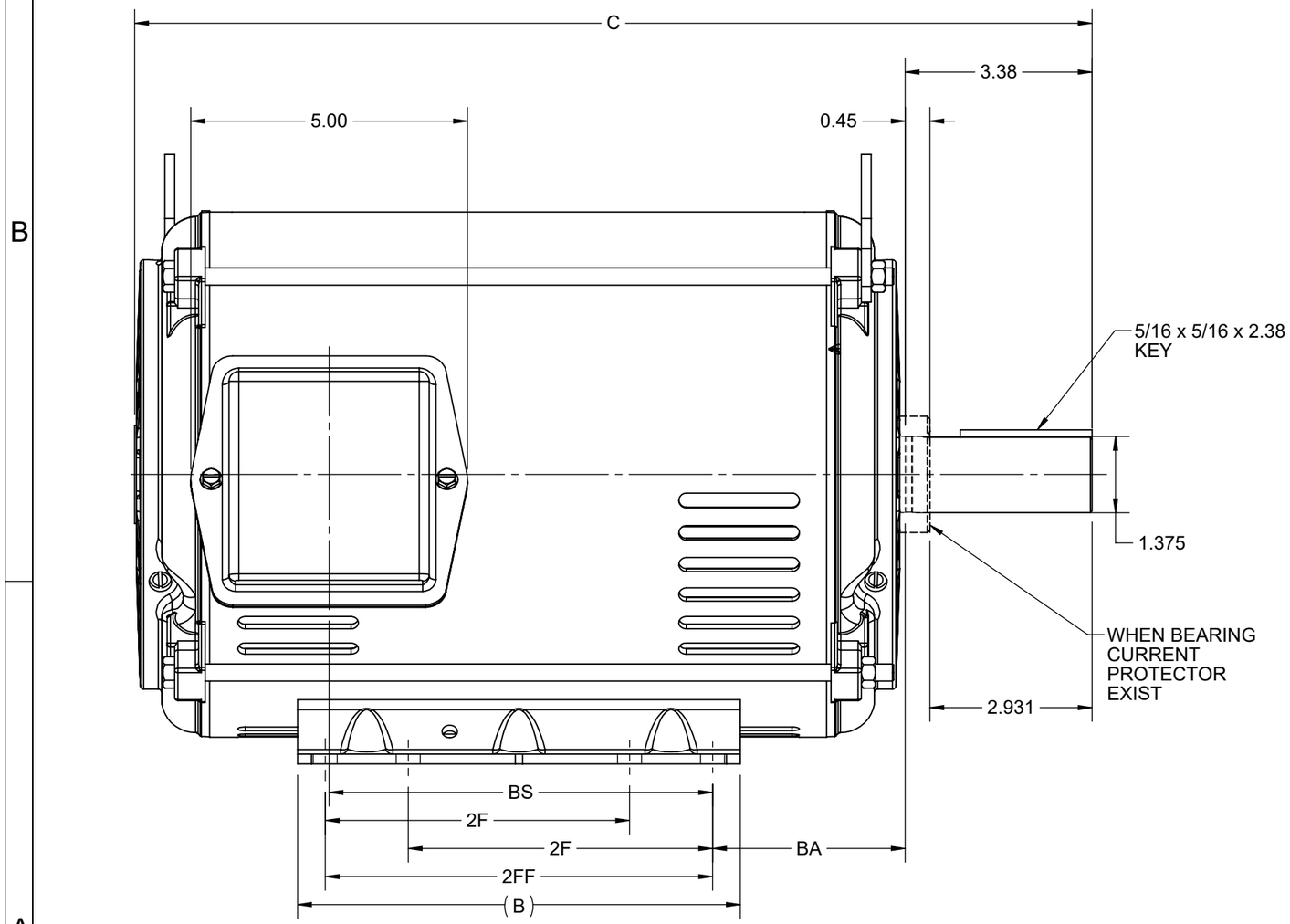

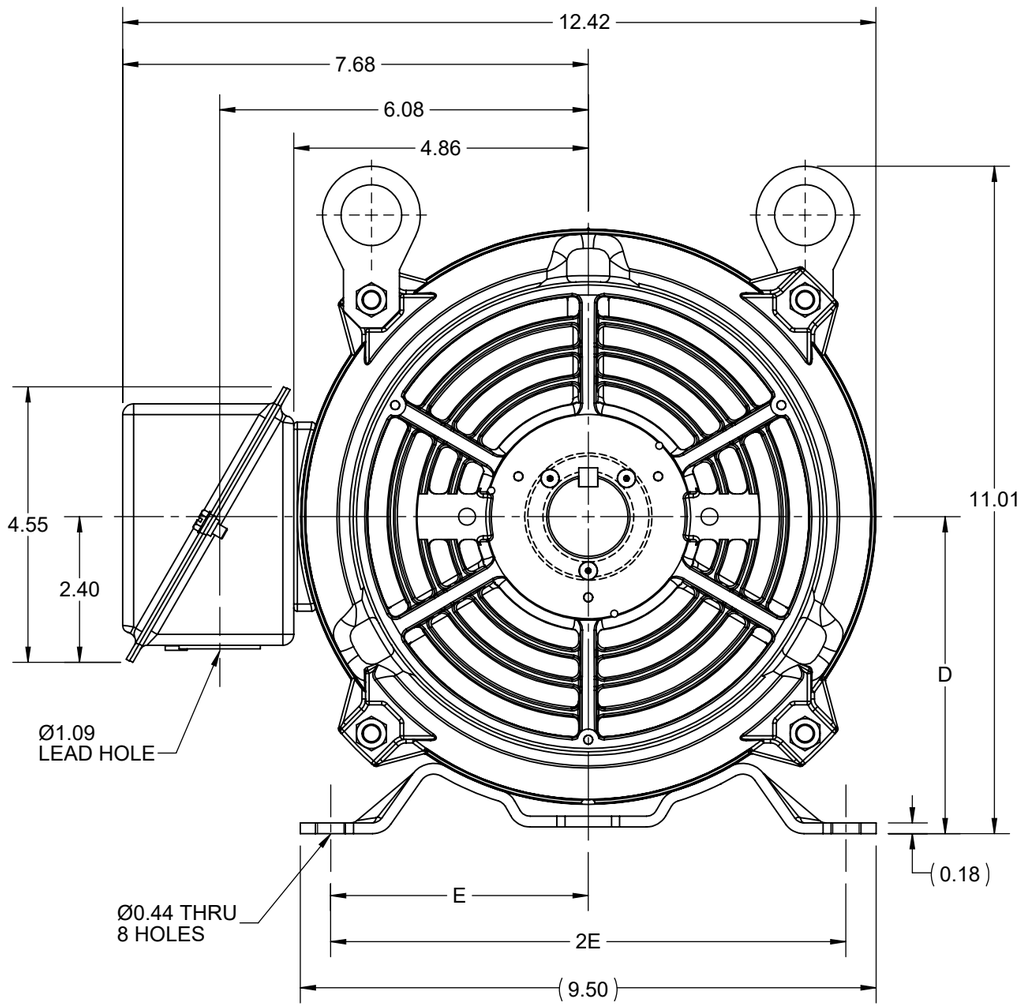

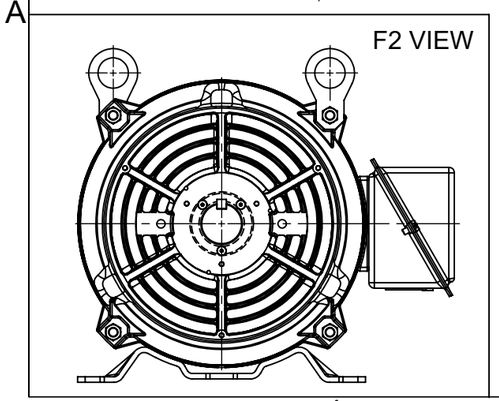

DRAWING REVISION G	REVISION BY SB	REV DATE/© DATE 07/18/2025
REQUEST NUMBER CR-0023556	APPROVED BY SBD	DATE 07/18/2025
REQUEST NUMBER DESCRIPTION: DRAWING TITLE BLOCK UPDATED		

COPYRIGHT (PER REVISION DATE) MARATHON ELECTRIC, LLC. ALL RIGHTS RESERVED. PROPRIETARY AND CONFIDENTIAL INFORMATION - THIS DOCUMENT IS THE PROPERTY OF MARATHON ELECTRIC, LLC. ("OWNER") AND CONTAINS OWNER'S PROPRIETARY INFORMATION. ANY PERSON, CORPORATION OR OTHER FIRM RECEIVING IT IS DEEMED, BY RECEIVING IT, TO AGREE THAT IT, AND/OR ANY PART OF IT, SHALL NOT BE DISCLOSED TO ANY PERSON, CORPORATION OR OTHER ENTITY, DUPLICATED, AND/OR USED, EXCEPT AS EXPRESSLY APPROVED IN WRITING IN ADVANCE BY OWNER. THIS DOCUMENT SHALL BE RETURNED TO OWNER UPON REQUEST. IT MAY BE SUBJECT TO CERTAIN RESTRICTIONS UNDER APPLICABLE EXPORT CONTROL LAWS AND REGULATIONS.

PRIMARY DIMENSIONS ARE INCH
mm DIMENSIONS IN [BRACKETS]
ARE FOR REFERENCE ONLY

DRAWN BY ZXW	marathon™	
DATE 16/04/2015	DESCRIPTION	
APPROVED BY ZL	OUTLINE	
DATE 16/04/2015	213/215T FR NEMA ODP RS	
REFERENCE	MATERIAL	PROCESS/FINISH
THIRD ANGLE PROJECTION	SIZE B / DRAWING NUMBER SS620684	SHEET 1 OF 1

HIGH VOLTAGE

WYE START

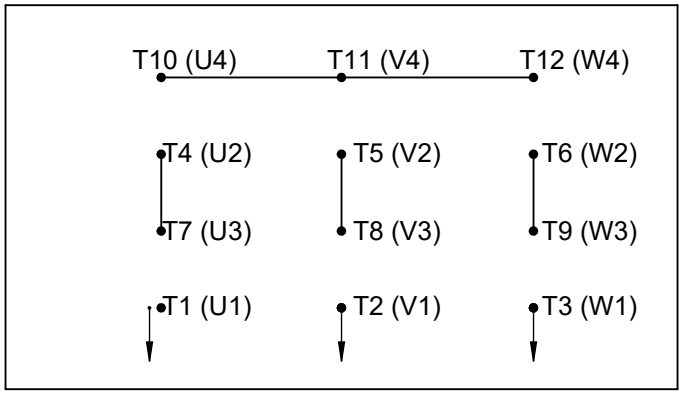

DELTA RUN

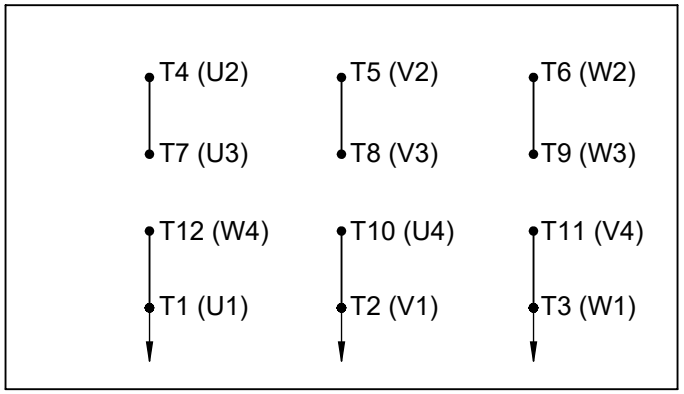

LOW VOLTAGE

WYE START

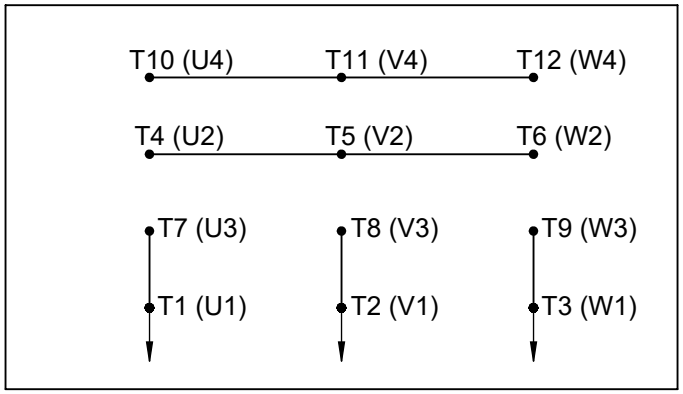

DELTA RUN

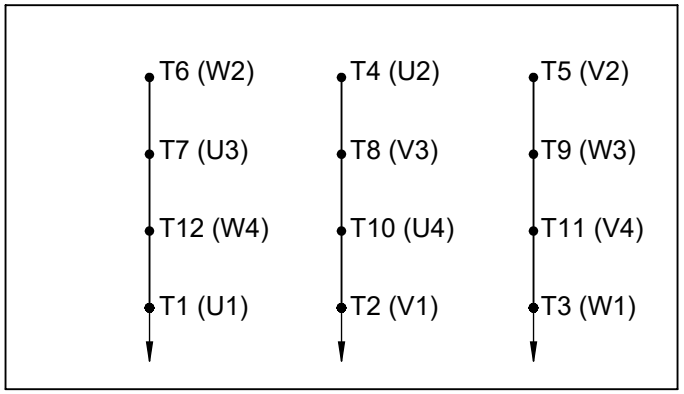

4/2 CKTY △

DRAWING REVISION	REVISION BY	REV DATE/© DATE
E	SB	08/01/2025
REQUEST NUMBER	APPROVED BY	DATE
CR-0023654	SBD	08/01/2025

REQUEST NUMBER DESCRIPTION
DRAWING TITLE BLOCK UPDATED

COPYRIGHT (PER REVISION DATE) MARATHON ELECTRIC, LLC. ALL RIGHTS RESERVED. PROPRIETARY AND CONFIDENTIAL INFORMATION - THIS DOCUMENT IS THE PROPERTY OF MARATHON ELECTRIC, LLC. ("OWNER") AND CONTAINS OWNER'S PROPRIETARY INFORMATION. ANY PERSON, CORPORATION OR OTHER FIRM RECEIVING IT IS DEEMED, BY RECEIVING IT, TO AGREE THAT IT, AND/OR ANY PART OF IT, SHALL NOT BE DISCLOSED TO ANY PERSON, CORPORATION OR OTHER ENTITY, DUPLICATED, AND/OR USED, EXCEPT AS EXPRESSLY APPROVED IN WRITING IN ADVANCE BY OWNER. THIS DOCUMENT SHALL BE RETURNED TO OWNER UPON REQUEST. IT MAY BE SUBJECT TO CERTAIN RESTRICTIONS UNDER APPLICABLE EXPORT CONTROL LAWS AND REGULATIONS.

PRIMARY DIMENSIONS ARE INCH
mm DIMENSIONS IN [BRACKETS]
ARE FOR REFERENCE ONLY

DRAWN BY	BLR
DATE	03-09-1998
APPROVED BY	GK
DATE	03-23-1998
REFERENCE	
THIRD ANGLE PROJECTION	

marathon™

DESCRIPTION
CONN DIAGRAM-EXTERNAL
12 LEAD - DUAL VOLT. - WYE START - DELTA RUN

MATERIAL	PROCESS/FINISH

SIZE	DRAWING NUMBER	SHEET
A	EE7358	1 OF 1

P.O. BOX 8003
WAUSAU, WI 54401-8003
PH. 715-675-3311

marathon® Motors

DATA VOLTS: 400

CERTIFICATION DATA SHEET

CUSTOMER:
ORDER #:
CONN. DIAGRAM: EE7358
OUTLINE: SS620684
WINDING: HA31324019 NONE 2
SPEED:

CUSTOMER P.O. #:
REFERENCE MODEL #: 215TTDBD8026
CAT #: H956A
CUSTOMER PART #:
MOUNTING: F1/F2 CAPABLE

TYPICAL MOTOR PERFORMANCE DATA

HP	KW	SYNC RPM	FL RPM	FRAME	ENCLOSURE	TYPE	KVA CODE	DESIGN
10	7.5	1500	1465	215T	DP	TDB	G	B

PH	HZ	VOLTS	AMPS	START TYPE	DUTY	INSL	S.F.	AMB	ELEV.
3	50	200/400	28.9/14.5	PWS (LV ONLY) & YDRUN	CONT	F	1.15	40	3300

F.L. EFF	88.8	3/4 LD EFF	90.0	1/2 LD EFF	90.2	GTD EFF	ELECT. TYPE
F.L. PF	84.5	3/4 LD PF	81.5	1/2 LD PF	72.5	88.2	SQ CAGE IND RUN

F.L. TORQUE	LR AMPS @ 460 V	L.R. TORQUE	B.D. TORQUE	F.L. RISE (° C)	
36.0 LB-FT	90.3	90.0 LB-FT 250%	88.0 LB-FT 244%	60	

SOUND PRESSURE @ 3 FT.	SOUND POWER	ROTOR WK²	MAX. LOAD WK²	SAFE STALL TIME	STARTS/HOUR	APROX.	MOTOR WGT
0 dBA	9 dBA	1.094 LB-FT²	0 LB-FT²	0 SEC.	0	0	LB.

*** SUPPLEMENTAL INFORMATION ***

DE BRACKET TYPE	ODE BRACKET TYPE	MOUNT TYPE	MOTOR ORIENTATION	SEVERE DUTY	HAZARDOUS LOCATION	DRIP COVER	SCREENS	PAINT
STANDARD	STANDARD	RIGID	HORIZONTAL	NO	NONE	YES	NONE	BLUE (ENAMEL)

BEARINGS DE	BEARINGS ODE	GREASE	SHAFT TYPE	SPECIAL DE	SPECIAL ODE	SHAFT MATERIAL	FRAME MATERIAL
BALL	BALL	POLYREX EM	T	NONE	NONE	1045 HOT ROLLED (C-204)	ROLLED STEEL
6307	6206						

THERMOSTATS	PROTECTORS	WDG RTD's	BRG RTD's	THERMISTORS	CONTROL	SPACE HEATERS
NONE	NOT	NONE	NONE	NONE	FALSE	NA

R1 (ohms/ph)	R2 (ohms/ph)	X1 (ohms/ph)	X2 (ohms/ph)	Xm (ohms/ph)	VIBRATION (in/sec)	FLOAT
0.712465374	0.47534626	2.257063712	2.946260388	53.04930748	0.150	ODE

*
N
O
T
E
S
*

INVERTER TORQUE: NONE
INV. HP SPEED RANGE: NONE

ENCODER: NONE
NONE
NONE NONE PPR

BRAKE: NONE
NONE NONE
FT-LB: NA
VOLTAGE: NONE HZ:

PREPARED BY: CHANDANA DESU
DATE: 6/20/2022

UL: V - LI,ME-INS,CONST UL REC

FORM: 3531 REV_4 2/27/06