marathon®

Brake Motors

Model No: 213TTTL16038
Catalog No: C407A

Brake Motor, 7.50 & 5 HP, 3 Ph, 60 & 50 Hz, 230/460 & 190/380 V, 1800 RPM, 213TC Frame, TENV

©2026 Marathon, All Rights Reserved.

marathon®

Product Information Packet: Model No: 213TTTL16038, Catalog No: C407A Brake Motor, 7.50 & 5 HP, 3 Ph, 60 & 50 Hz, 230/460 & 190/380 V, 1800 RPM, 213TC Frame, TENV

Nameplate Specifications

Phase	**3**	Output HP	**7.50 & 5 Hp**
Output KW	**5.6 & 3.7 kW**	Voltage	**230/460 & 190/380 V**
Speed	**1770 & 1475 r/min**	Synchronous RPM	**1800 & 1500 r/min**
Service Factor	**1.0 & 1.0**	Frame	**213TC**
Enclosure	**Totally Enclosed Non Ventilated**	Thermal Protection	**No Protection**
Efficiency	**92.4 & 91 %**	Ambient Temperature	**40 °C**
Frequency	**60 & 50 Hz**	Current	**19.2/9.6 & 16.4/8.2 A**
Power Factor	**79**	Duty	**Continuous**
Insulation Class	**F**	Design Code	**B**
KVA Code	**H**	Drive End Bearing Size	**6309**
Opp Drive End Bearing Size	**6307**	UL	**Recognized**
CSA	**Y**	CE	**Y**
IP Code	**43**	Number of Speeds	**1**

Technical Specifications

Electrical Type	**Squirrel Cage Induction Run**	Starting Method	**Across The Line**
Poles	**4**	Rotation	**Reversible**
Resistance Main	**1.02 O**	Mounting	**Rigid Base**
Motor Orientation	**Horizontal**	Drive End Bearing	**Ball**
Opp Drive End Bearing	**Ball**	Frame Material	**Aluminum**
Shaft Type	**T**	Shaft Diameter	**1.375 in**
Assembly/Box Mounting	**F1/F2 Capable**		

Drawings

Connection Drawing	**A-EE7308**	Outline Drawing	**B-SS330106-1175**

This is an uncontrolled document once printed or downloaded and is subject to change without notice. Date Created: 16/10/2026

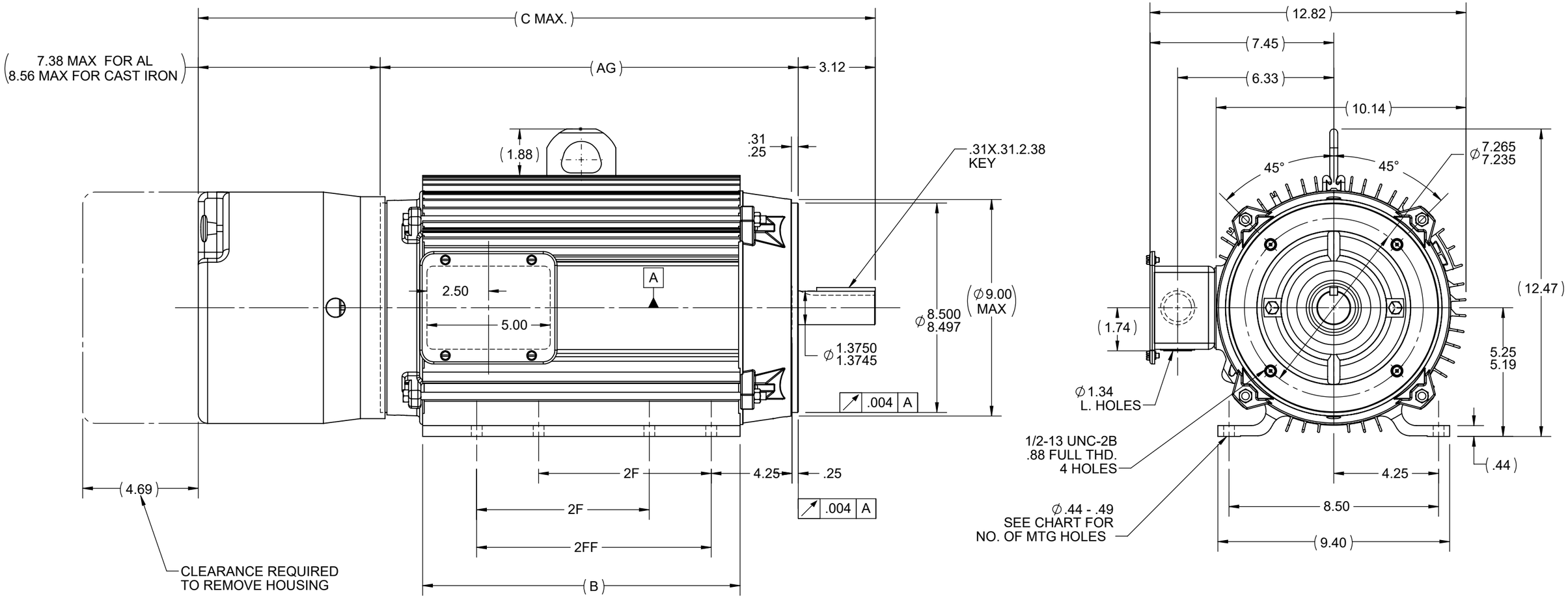

DASH	FR.	B	C* (CAST IRON)	2F	2FF	AG	BS	F2 CAPABLE	NO. OF MTG HOLES
875	213	8.87	24.64	5.50	--	12.96	4.05	YES	8
950	213	9.62	25.39	5.50	--	13.71	4.80	NO	4
1025	213	10.37	26.14	5.50	--	14.46	5.55	NO	4
1025	215	10.37	26.14	7.00	--	14.46	5.55	YES	8
1115	213/215	11.27	27.04	5.50	/7.00	15.36	6.45	YES	8
1175	213	11.87	27.64	5.50	--	15.96	7.05	YES	8
1175	215	11.87	27.64	7.00	--	15.96	7.05	NO	4
1275	213	12.87	28.64	5.50	--	16.96	8.05	YES	8
1275	215	12.87	28.64	7.00	--	16.96	8.05	YES	8

NOTES:

1. BOX CAN BE ROTATED IN 180° STEPS.
2. NAMEPLATE TO BE READ FROM CONDUIT BOX SIDE OF MOTOR.
3. SEE CHART FOR F2 CAPABILITY. IF YES, BOX CAN BE MOUNTED ON OPPOSITE SIDE BY REMOVING BRACKETS AND TURNING FRAME 180°.

DRAWING REVISION	REVISION BY	REV DATE/© DATE
E	SB	07/25/2025
REQUEST NUMBER	APPROVED BY	DATE
CR-0023556	SBD	07/25/2025

REQUEST NUMBER DESCRIPTION
DRAWING TITLE BLOCK UPDATED

COPYRIGHT (PER REVISION DATE) MARATHON ELECTRIC, LLC. ALL RIGHTS RESERVED. PROPRIETARY AND CONFIDENTIAL INFORMATION - THIS DOCUMENT IS THE PROPERTY OF MARATHON ELECTRIC, LLC. ("OWNER") AND CONTAINS OWNER'S PROPRIETARY INFORMATION. ANY PERSON, CORPORATION OR OTHER FIRM RECEIVING IT IS DEEMED, BY RECEIVING IT, TO AGREE THAT IT, AND/OR ANY PART OF IT, SHALL NOT BE DISCLOSED TO ANY PERSON, CORPORATION OR OTHER ENTITY, DUPLICATED, AND/OR USED, EXCEPT AS EXPRESSLY APPROVED IN WRITING IN ADVANCE BY OWNER. THIS DOCUMENT SHALL BE RETURNED TO OWNER UPON REQUEST. IT MAY BE SUBJECT TO CERTAIN RESTRICTIONS UNDER APPLICABLE EXPORT CONTROL LAWS AND REGULATIONS.

TOLERANCES (EXCEPT AS NOTED):

DEC.	INCH	mm	ANGLE
.X	±0.1	[±3]	±7' 30"
.XX	±0.03	[±0.8]	
.XXX	±0.005	[±0.13]	
.XXXX	±0.0005	[±0.013]	

REMOVE BURRS & BREAK SHARP EDGES: .003/.015 [.08/.38] X 45°
CORNER FILLETS: R.02 [.5]
MACHINED SURFACES: 200/ INCH 5.1/ mm
mm DIMENSIONS IN [BRACKETS] ARE FOR REFERENCE ONLY

DRAWN BY	MKLEIST
DATE	03-02-05
APPROVED BY	GK
DATE	10-11-05
REFERENCE	
THIRD ANGLE PROJECTION	

marathon™

DESCRIPTION
OUTLINE
210 TC FR. - STEARNS 87,000 SERIES BRK

MATERIAL | PROCESS/FINISH

SIZE B | DRAWING NUMBER SS330106 | SHEET 1 OF 1

Uncontrolled Copy

THREE PHASE DUAL VOLTAGE MOTOR

HIGH VOLTAGE

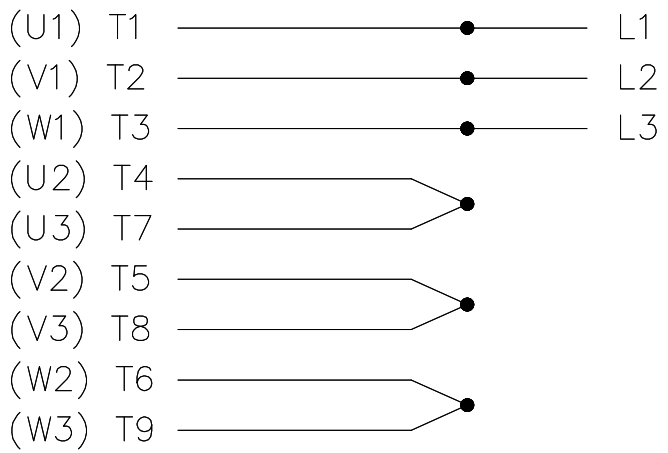

LOW VOLTAGE

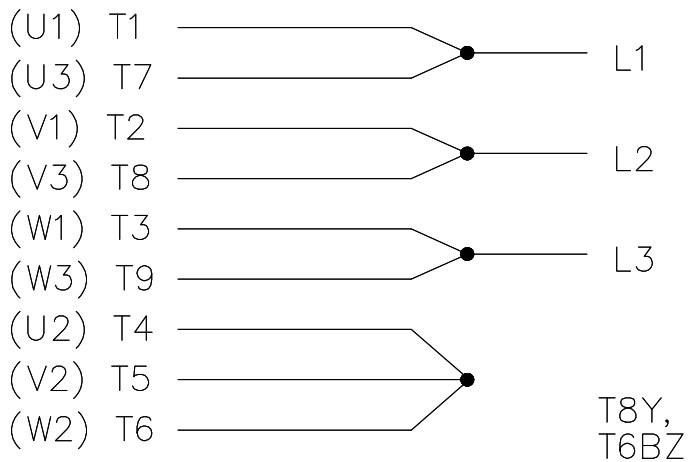

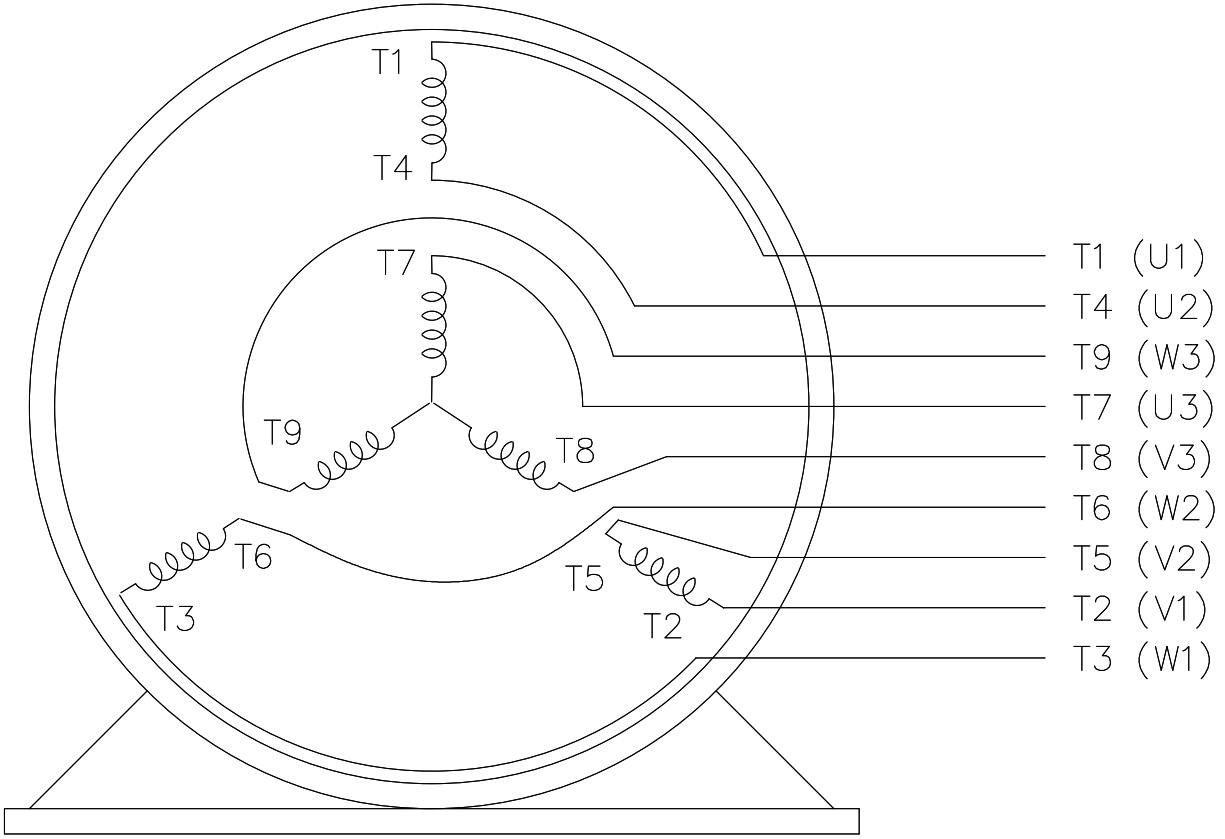

VIEW OF TERMINAL END

REF.
WINDING DIAGRAM

T8Y, T2Y, T2BL, T4BX, T2EC, T2G
T6BZ, T2B, T6BL, T4AV, T6B, T4B

OPTIONAL CORD CONNECTION

L1	WHITE
L2	RED
L3	BLACK

DRAWING REVISION J	REVISION BY SB	REV DATE/ © DATE 08/01/2025
REQUEST NUMBER CR-0023654	APPROVED BY SBD	DATE 08/01/2025

REQUEST NUMBER DESCRIPTION
DRAWING TITLE BLOCK UPDATED

COPYRIGHT (PER REVISION DATE) MARATHON ELECTRIC, LLC. ALL RIGHTS RESERVED. PROPRIETARY AND CONFIDENTIAL INFORMATION - THIS DOCUMENT IS THE PROPERTY OF MARATHON ELECTRIC, LLC. ("OWNER") AND CONTAINS OWNER'S PROPRIETARY INFORMATION. ANY PERSON, CORPORATION OR OTHER FIRM RECEIVING IT IS DEEMED, BY RECEIVING IT, TO AGREE THAT IT, AND/OR ANY PART OF IT, SHALL NOT BE DISCLOSED TO ANY PERSON, CORPORATION OR OTHER ENTITY, DUPLICATED, AND/OR USED, EXCEPT AS EXPRESSLY APPROVED IN WRITING IN ADVANCE BY OWNER. THIS DOCUMENT SHALL BE RETURNED TO OWNER UPON REQUEST. IT MAY BE SUBJECT TO CERTAIN RESTRICTIONS UNDER APPLICABLE EXPORT CONTROL LAWS AND REGULATIONS.

PRIMARY DIMENSIONS ARE INCH
mm DIMENSIONS IN [BRACKETS]
ARE FOR REFERENCE ONLY

DRAWN BY	RM
DATE	11/20/1990
APPROVED BY	SAS
DATE	04/24/2003
REFERENCE	
THIRD ANGLE PROJECTION	

marathon™

DESCRIPTION
CONN DIAGRAM-EXTERNAL
3Ø - DUAL VOLTAGE MOTOR

MATERIAL	PROCESS/FINISH

SIZE	DRAWING NUMBER	SHEET
A	4 of 4 EE7308	1 OF 1