marathon®

Brake Motors

Model No: 213TTFBD16038
Catalog No: C412

Brake Motor, 7.50 & 5 HP, 3 Ph, 60 & 50 Hz, 230/460 & 190/380 V, 1800 RPM, 213TC Frame, TEFC

©2026 Marathon, All Rights Reserved.

marathon®

Product Information Packet: Model No: 213TTFBD16038, Catalog No: C412 Brake Motor, 7.50 & 5 HP, 3 Ph, 60 & 50 Hz, 230/460 & 190/380 V, 1800 RPM, 213TC Frame, TEFC

Nameplate Specifications

Phase	**3**	Output HP	**7.50 & 5 Hp**
Output KW	**5.6 & 3.7 kW**	Voltage	**230/460 & 190/380 V**
Speed	**1768 & 1475 r/min**	Synchronous RPM	**1800 & 1500 r/min**
Service Factor	**1.15 & 1.15**	Frame	**213TC**
Enclosure	**Totally Enclosed Fan Cooled**	Thermal Protection	**No Protection**
Efficiency	**91.7 & 91 %**	Ambient Temperature	**40 °C**
Frequency	**60 & 50 Hz**	Current	**19/9.5 & 16/8 A**
Power Factor	**79.3**	Duty	**Continuous**
Insulation Class	**F**	Design Code	**B**
KVA Code	**H**	Drive End Bearing Size	**6307**
Opp Drive End Bearing Size	**6307**	UL	**Listed**
CSA	**Y**	CE	**Y**
IP Code	**43**	Number of Speeds	**1**

Technical Specifications

Electrical Type	**Squirrel Cage Inverter Rated**	Starting Method	**Line Or Inverter**
Poles	**4**	Rotation	**Reversible**
Resistance Main	**1.473 O**	Mounting	**Rigid Base**
Motor Orientation	**Horizontal**	Drive End Bearing	**Ball**
Opp Drive End Bearing	**Ball**	Frame Material	**Rolled Steel**
Shaft Type	**T**	Assembly/Box Mounting	**F1/F2 Capable**
Inverter Load	**Constant 10:1/Variable 10:1**		

Drawings

Connection Drawing	**EE7308**	Outline Drawing	**SS621221**

This is an uncontrolled document once printed or downloaded and is subject to change without notice. Date Created: 16/10/2026

DASH	FRAME	B	C	E	2E	2F	2FF	AG	AH	BA	BV	MOUNTING
100	213TC	8.00	24.62	4.25	8.50	5.50	7.00	21.50	3.12	4.25	9.94	F1 OR F2
200	215TC		26.12					23.00			11.44	

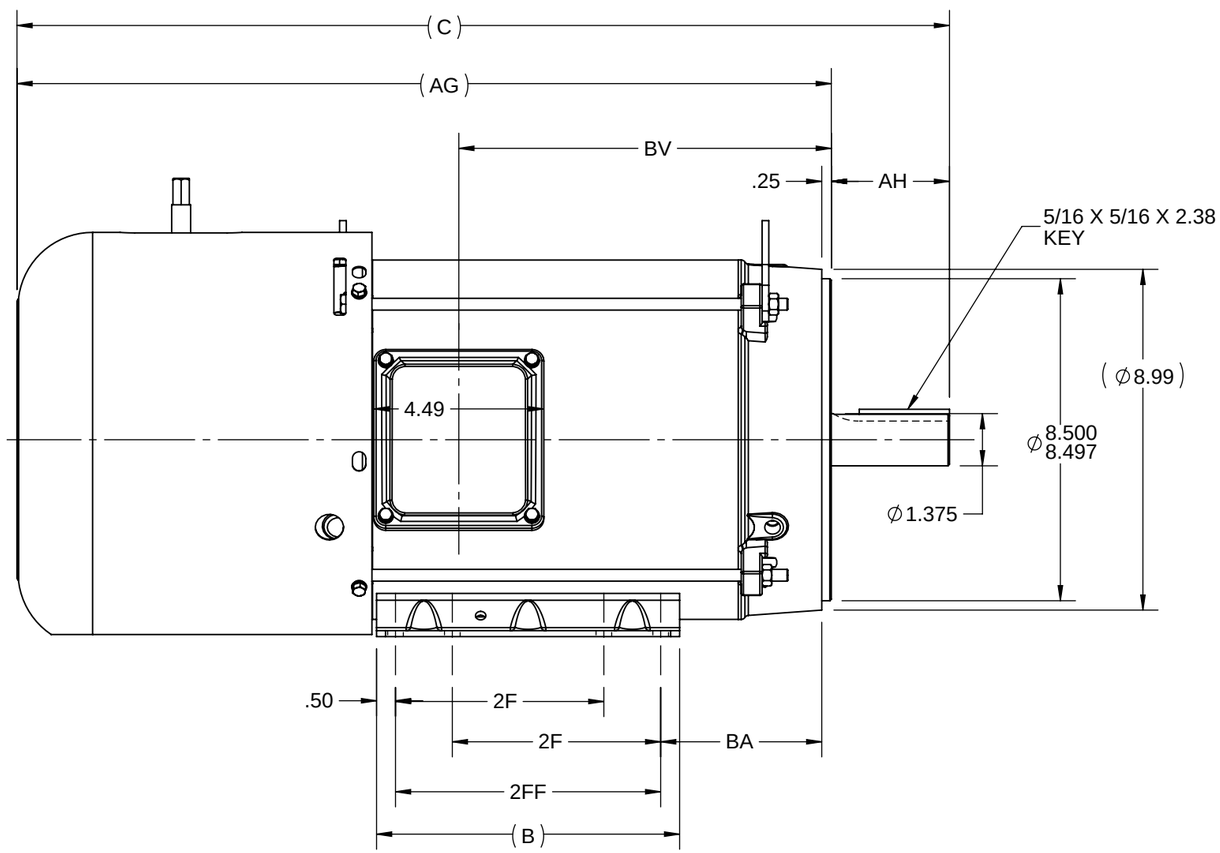

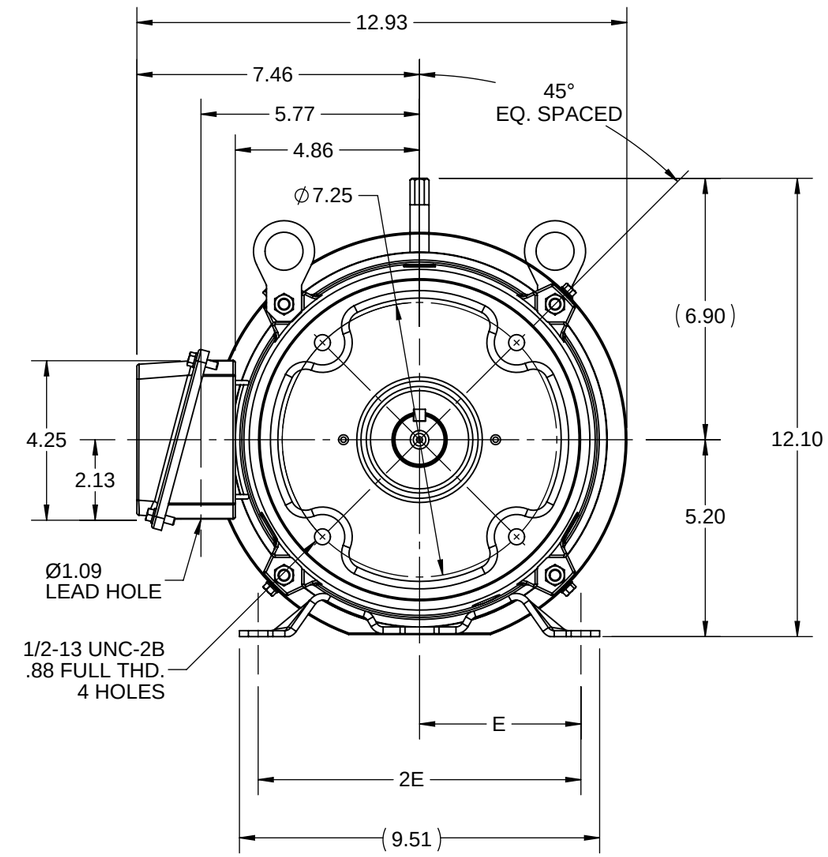

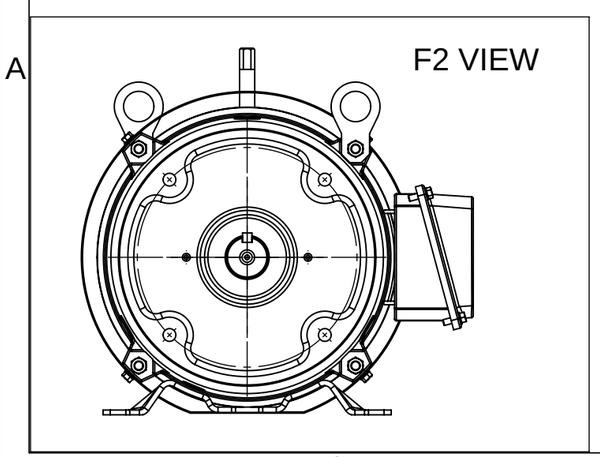

DRAWING REVISION	REVISION BY	REV DATE/© DATE
B	SB	05/27/2026
REQUEST NUMBER	APPROVED BY	DATE
CR-0026396	RMS	05/27/2026

REQUEST NUMBER DESCRIPTION
NEW DRAWING RELEASE

COPYRIGHT (PER REVISION DATE) MARATHON ELECTRIC, LLC. ALL RIGHTS RESERVED. PROPRIETARY AND CONFIDENTIAL INFORMATION - THIS DOCUMENT IS THE PROPERTY OF MARATHON ELECTRIC, LLC. ("OWNER") AND CONTAINS OWNER'S PROPRIETARY INFORMATION. ANY PERSON, CORPORATION OR OTHER FIRM RECEIVING IT IS DEEMED, BY RECEIVING IT, TO AGREE THAT IT, AND/OR ANY PART OF IT, SHALL NOT BE DISCLOSED TO ANY PERSON, CORPORATION OR OTHER ENTITY, DUPLICATED, AND/OR USED, EXCEPT AS EXPRESSLY APPROVED IN WRITING IN ADVANCE BY OWNER. THIS DOCUMENT SHALL BE RETURNED TO OWNER UPON REQUEST. IT MAY BE SUBJECT TO CERTAIN RESTRICTIONS UNDER APPLICABLE EXPORT CONTROL LAWS AND REGULATIONS.

TOLERANCES (EXCEPT AS NOTED):

DEC.	INCH	mm	ANGLE
.X	±0.1	[±3]	±7' 30"
.XX	±0.02	[±0.5]	
.XXX	±0.005	[±0.13]	
.XXXX	±0.0005	[±0.013]	

REMOVE BURRS & BREAK SHARP EDGES: .003/.015 [.08/.38] X 45°
CORNER FILLETS: R.02 [.5]
MACHINED SURFACES: 200 INCH / 5.1 mm
mm DIMENSIONS IN [BRACKETS] ARE FOR REFERENCE ONLY

DRAWN BY	GOPI
DATE	11/11/2021
APPROVED BY	VR
DATE	11/11/2021
REFERENCE	
THIRD ANGLE PROJECTION	

marathon™

DESCRIPTION
OUTLINE
210 FR. - TEFC WITH BRAKE - R/S - C' FACE

MATERIAL | PROCESS/FINISH

SIZE B | DRAWING NUMBER SS621221 | SHEET 1 OF 1

Uncontrolled Copy

THREE PHASE DUAL VOLTAGE MOTOR

HIGH VOLTAGE

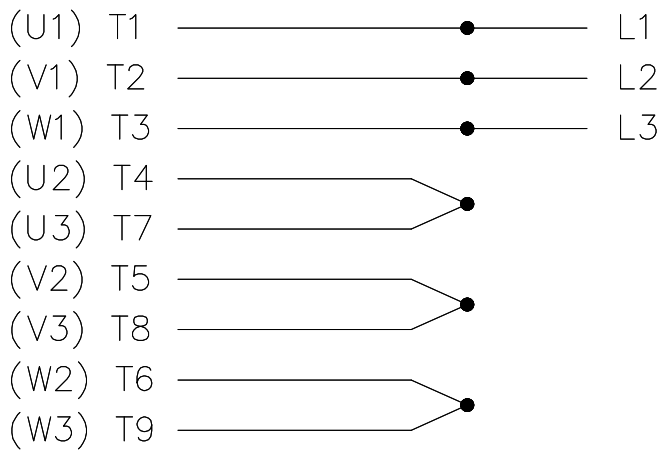

LOW VOLTAGE

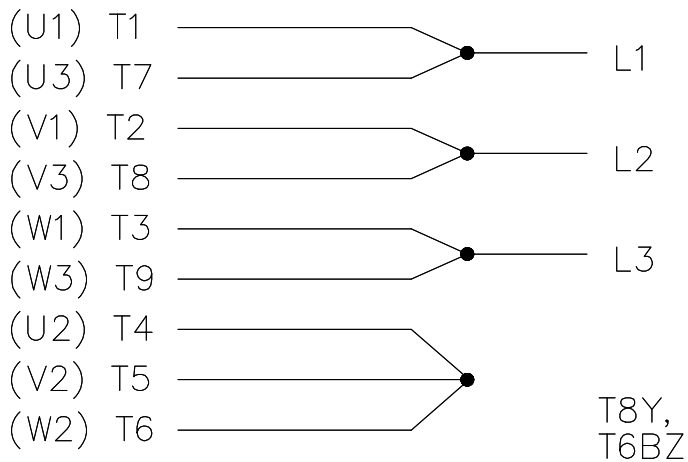

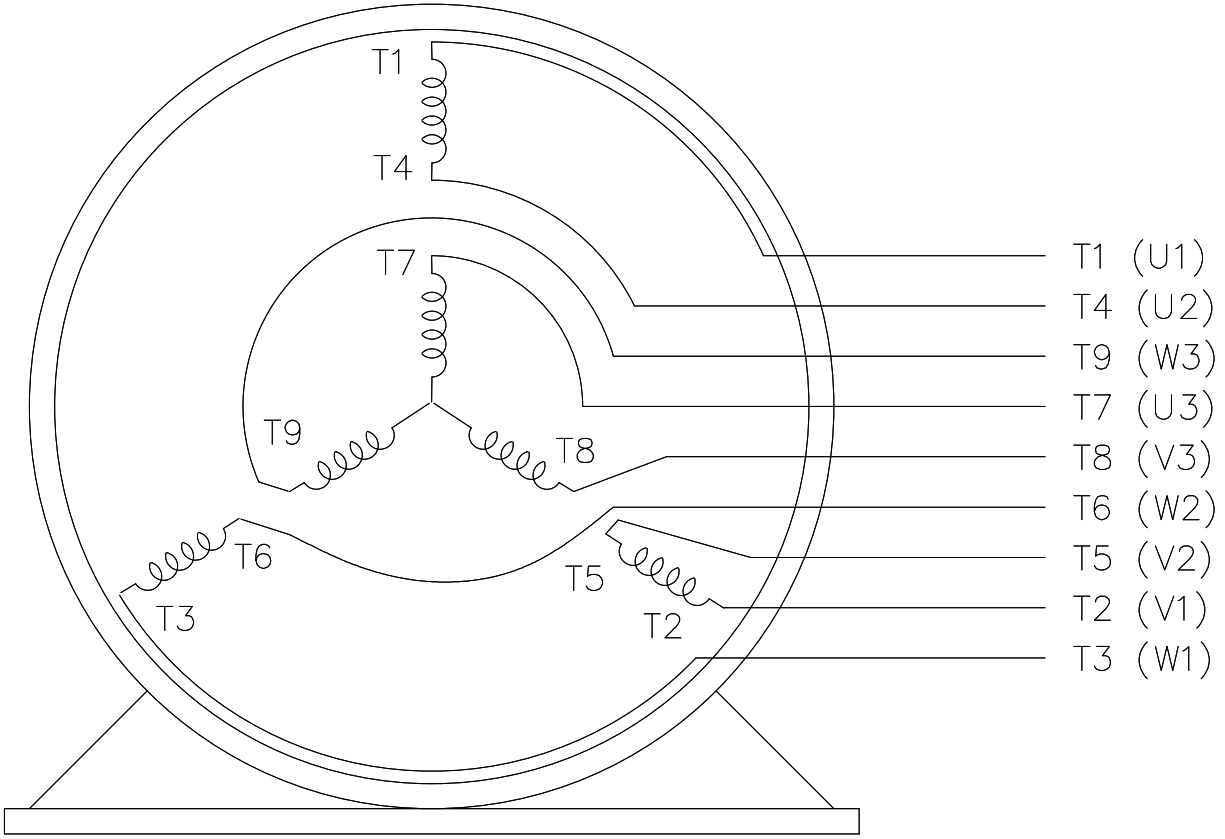

VIEW OF TERMINAL END

REF.
WINDING DIAGRAM

T8Y, T2Y, T2BL, T4BX, T2EC, T2G
T6BZ, T2B, T6BL, T4AV, T6B, T4B

OPTIONAL CORD CONNECTION

L1	WHITE
L2	RED
L3	BLACK

DRAWING REVISION J	REVISION BY SB	REV DATE/ © DATE 08/01/2025
REQUEST NUMBER CR-0023654	APPROVED BY SBD	DATE 08/01/2025

REQUEST NUMBER DESCRIPTION
DRAWING TITLE BLOCK UPDATED

COPYRIGHT (PER REVISION DATE) MARATHON ELECTRIC, LLC. ALL RIGHTS RESERVED. PROPRIETARY AND CONFIDENTIAL INFORMATION - THIS DOCUMENT IS THE PROPERTY OF MARATHON ELECTRIC, LLC. ("OWNER") AND CONTAINS OWNER'S PROPRIETARY INFORMATION. ANY PERSON, CORPORATION OR OTHER FIRM RECEIVING IT IS DEEMED, BY RECEIVING IT, TO AGREE THAT IT, AND/OR ANY PART OF IT, SHALL NOT BE DISCLOSED TO ANY PERSON, CORPORATION OR OTHER ENTITY, DUPLICATED, AND/OR USED, EXCEPT AS EXPRESSLY APPROVED IN WRITING IN ADVANCE BY OWNER. THIS DOCUMENT SHALL BE RETURNED TO OWNER UPON REQUEST. IT MAY BE SUBJECT TO CERTAIN RESTRICTIONS UNDER APPLICABLE EXPORT CONTROL LAWS AND REGULATIONS.

PRIMARY DIMENSIONS ARE INCH
mm DIMENSIONS IN [BRACKETS]
ARE FOR REFERENCE ONLY

DRAWN BY	RM
DATE	11/20/1990
APPROVED BY	SAS
DATE	04/24/2003
REFERENCE	
THIRD ANGLE PROJECTION	

marathon™

DESCRIPTION
CONN DIAGRAM-EXTERNAL
3Ø - DUAL VOLTAGE MOTOR

MATERIAL	PROCESS/FINISH

SIZE	DRAWING NUMBER	SHEET
A	4 of 4 EE7308	1 OF 1