marathon®

Inverter (Vector) Duty Motors

Model No: 213THFCD8028
Catalog No: Y595A

Inverter (Vector) Duty Motor, 7.50 HP, 3 Ph, 60 Hz, 230/460 V, 1800 RPM, 213TC Frame, TEFC

©2026 Marathon, All Rights Reserved.

marathon®

Product Information Packet: Model No: 213THFCD8028, Catalog No: Y595A Inverter (Vector) Duty Motor, 7.50 HP, 3 Ph, 60 Hz, 230/460 V, 1800 RPM, 213TC Frame, TEFC

Nameplate Specifications

Phase	**3**	Output HP	**7.50 Hp**
Output KW	**5.6 kW**	Voltage	**230/460 V**
Speed	**1770 r/min**	Synchronous RPM	**1800 r/min**
Service Factor	**1.00**	Frame	**213TC**
Enclosure	**Totally Enclosed Fan Cooled**	Thermal Protection	**Thermostat**
Efficiency	**90.6 %**	Ambient Temperature	**40 °C**
Frequency	**60 Hz**	Current	**19.0/9.5 A**
Power Factor	**80.5**	Duty	**Continuous**
Insulation Class	**H**	Design Code	**INV**
KVA Code	**L**	Drive End Bearing Size	**6309**
Opp Drive End Bearing Size	**6208**	UL	**Recognized**
CSA	**Y**	CE	**Y**
IP Code	**55**	Number of Speeds	**1**

Technical Specifications

Electrical Type	**Squirrel Cage Inverter Duty**	Starting Method	**Inverter Only**
Poles	**4**	Rotation	**Reversible**
Resistance Main	**1.1352 O**	Mounting	**Rigid Base**
Motor Orientation	**Horizontal**	Drive End Bearing	**Ball**
Opp Drive End Bearing	**Ball**	Frame Material	**Cast Iron**
Shaft Type	**T**	Shaft Diameter	**1.375 in**
Assembly/Box Mounting	**F1/F2 Capable**	Inverter Load	**Constant 2000:1**

Drawings

Connection Drawing	**EE7308T**	Outline Drawing	**SS810151-100**

This is an uncontrolled document once printed or downloaded and is subject to change without notice. Date Created: 15/10/2026

DASH NO.	B	C	E	2E	2F	2FF	AG	AH	BA	BV	MOUNTING	FRAME
100	6.76	21.47	4.25	8.50	---	5.50	18.34	3.12	4.25	7.26	F1 OR F2	213TC
200	8.26	22.97			5.50	7.00	19.84			8.00		213/215TC

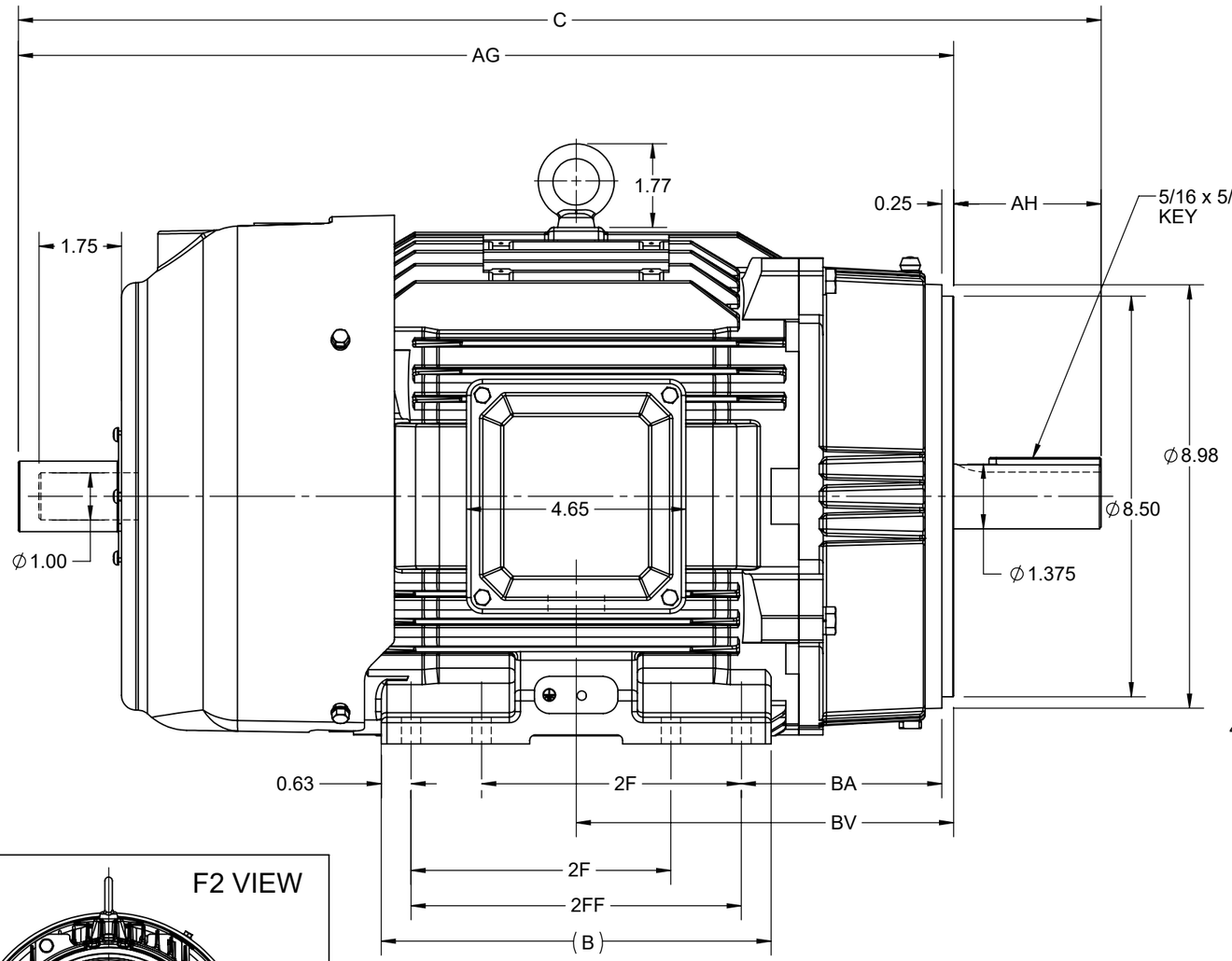

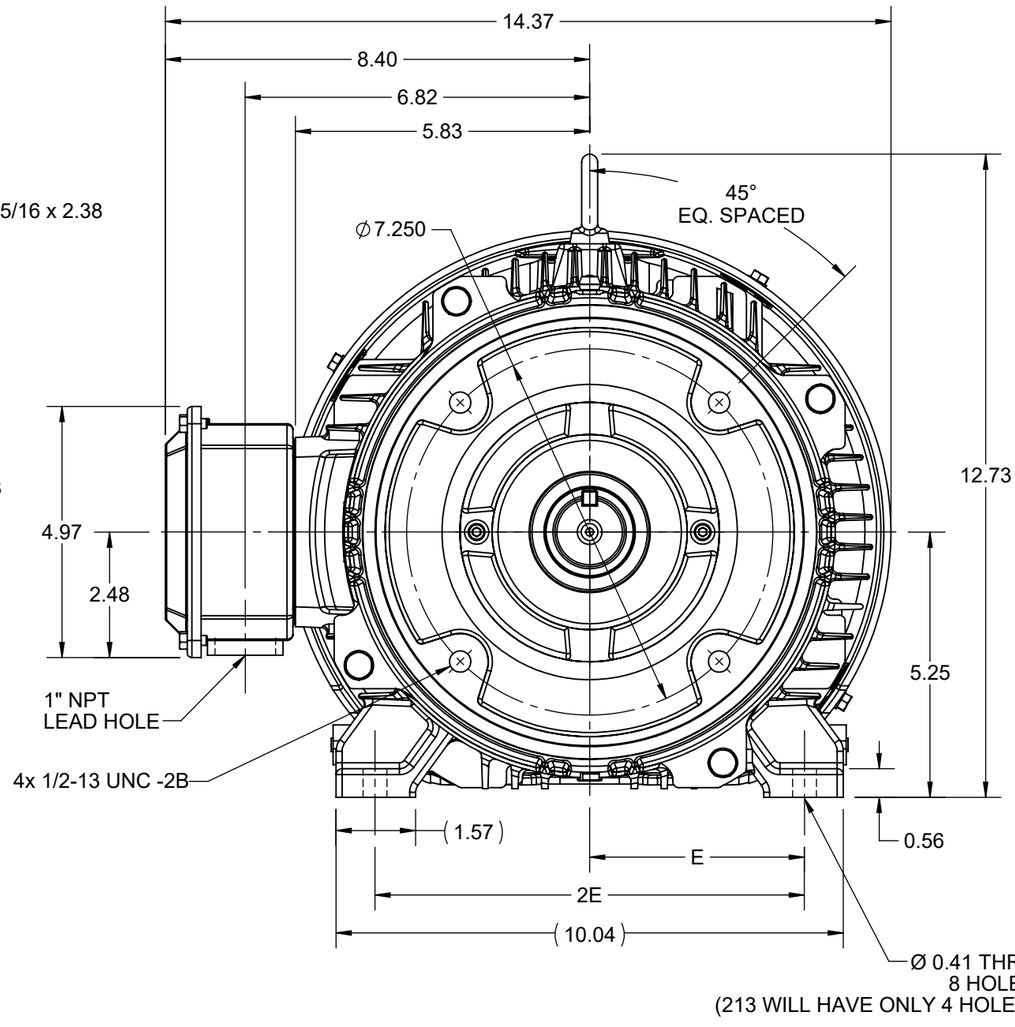

F2 VIEW

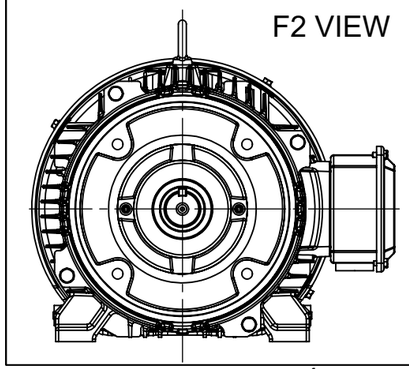

DRAWING REVISION	REVISION BY	REV DATE/© DATE
C	SB	07/25/2025
REQUEST NUMBER	APPROVED BY	DATE
CR-0023600	SBD	07/25/2025

REQUEST NUMBER DESCRIPTION
DRAWING TITLE BLOCK UPDATED

COPYRIGHT (PER REVISION DATE) MARATHON ELECTRIC, LLC. ALL RIGHTS RESERVED. PROPRIETARY AND CONFIDENTIAL INFORMATION - THIS DOCUMENT IS THE PROPERTY OF MARATHON ELECTRIC, LLC. ("OWNER") AND CONTAINS OWNER'S PROPRIETARY INFORMATION. ANY PERSON, CORPORATION OR OTHER FIRM RECEIVING IT IS DEEMED, BY RECEIVING IT, TO AGREE THAT IT, AND/OR ANY PART OF IT, SHALL NOT BE DISCLOSED TO ANY PERSON, CORPORATION OR OTHER ENTITY, DUPLICATED, AND/OR USED, EXCEPT AS EXPRESSLY APPROVED IN WRITING IN ADVANCE BY OWNER. THIS DOCUMENT SHALL BE RETURNED TO OWNER UPON REQUEST. IT MAY BE SUBJECT TO CERTAIN RESTRICTIONS UNDER APPLICABLE EXPORT CONTROL LAWS AND REGULATIONS.

PRIMARY DIMENSIONS ARE INCH
mm DIMENSIONS IN [BRACKETS]
ARE FOR REFERENCE ONLY

DRAWN BY	VS
DATE	11-06-2020
APPROVED BY	SBD
DATE	11-06-2020
REFERENCE	

THIRD ANGLE PROJECTION

marathon™

DESCRIPTION
OUTLINE
213/215TC FR TEFC-CAST IRON TACH MTG.

MATERIAL	PROCESS/FINISH

SIZE	DRAWING NUMBER	SHEET
B	SS810151	1 OF 1

HIGH VOLTAGE

(U1) T1 — L1
(V1) T2 — L2
(W1) T3 — L3
(U2) T4
(U3) T7
(V2) T5
(V3) T8
(W2) T6
(W3) T9

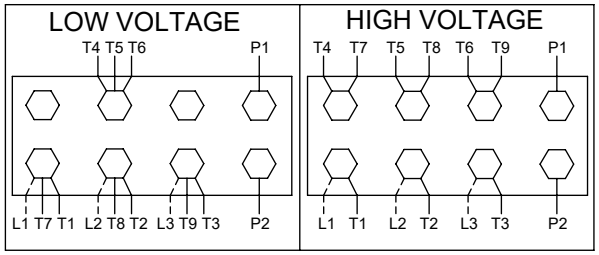

THREE PHASE
DUAL VOLTAGE MOTOR

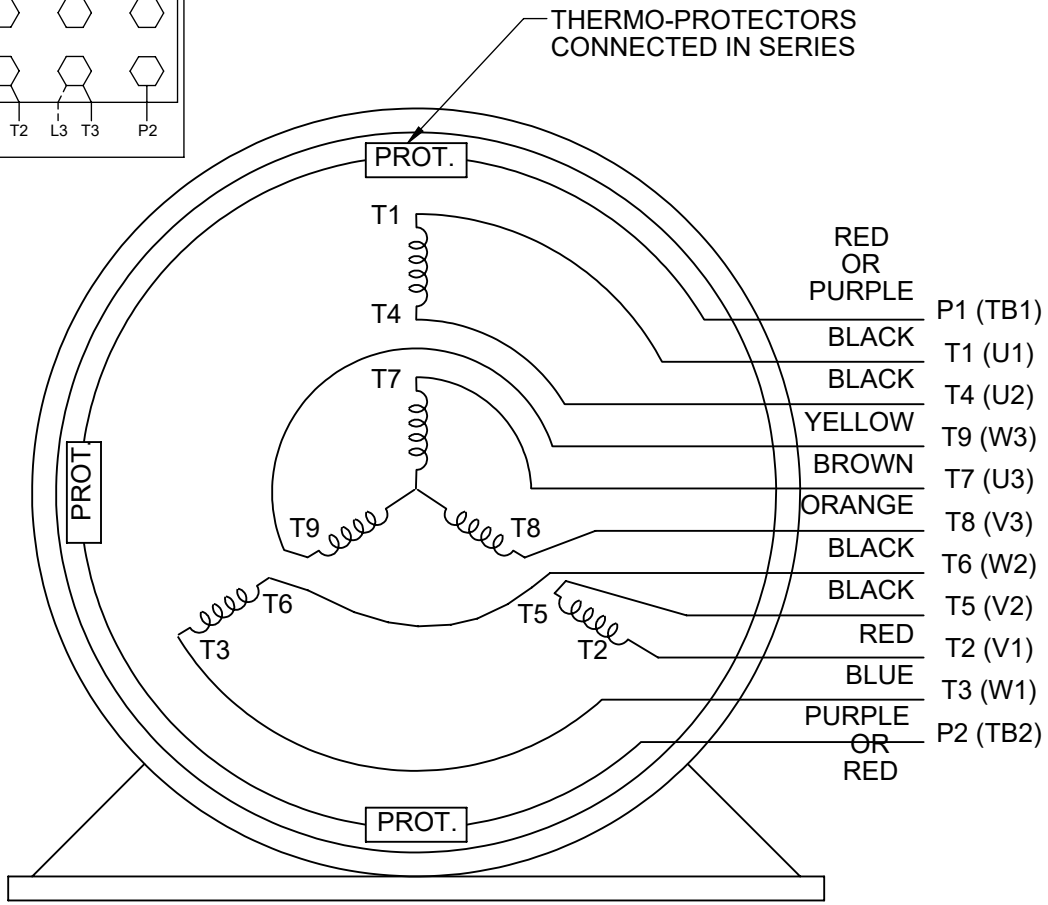

VIEW OF TERMINAL END

NOTE FOR FACTORY USE ONLY:
TO SURGE TEST FOR COMMON CONNECT:
HIGH VOLT: CONNECT P1 TO T1
THEN P2 TO L1
LOW VOLT: CONNECT P1 TO T1 & T7,
THEN P2 TO L1

LOW VOLTAGE

(U1) T1 — L1
(U3) T7 — L1
(V1) T2 — L2
(V3) T8 — L2
(W1) T3 — L3
(W3) T9 — L3
(U2) T4
(V2) T5
(W2) T6

NOTE: LEAD'S COLOR CAN BE YELLOW OR WHITE FOR IMG PLANT

DRAWING REVISION: U	REVISION BY: SB	REV DATE/© DATE: 08/01/2025	PRIMARY DIMENSIONS ARE INCH mm DIMENSIONS IN [BRACKETS] ARE FOR REFERENCE ONLY	DRAWN BY: SMC	marathon™
REQUEST NUMBER: CR-0023654	APPROVED BY: SBD	DATE: 08/01/2025		DATE: 05-13-1992	
REQUEST NUMBER DESCRIPTION: DRAWING TITLE BLOCK UPDATED				APPROVED BY: TB	DESCRIPTION: CONN DIAGRAM-EXTERNAL
				DATE: 05-13-1992	3 PHASE - DUAL VOLTAGE MOTOR
				REFERENCE: EE7308/EE7300	MATERIAL / PROCESS/FINISH
				THIRD ANGLE PROJECTION	SIZE: A — DRAWING NUMBER: EE7308T — SHEET: 1 OF 1

COPYRIGHT (PER REVISION DATE) MARATHON ELECTRIC, LLC. ALL RIGHTS RESERVED. PROPRIETARY AND CONFIDENTIAL INFORMATION - THIS DOCUMENT IS THE PROPERTY OF MARATHON ELECTRIC, LLC. ("OWNER") AND CONTAINS OWNER'S PROPRIETARY INFORMATION. ANY PERSON, CORPORATION OR OTHER FIRM RECEIVING IT IS DEEMED, BY RECEIVING IT, TO AGREE THAT IT, AND/OR ANY PART OF IT, SHALL NOT BE DISCLOSED TO ANY PERSON, CORPORATION OR OTHER ENTITY, DUPLICATED, AND/OR USED, EXCEPT AS EXPRESSLY APPROVED IN WRITING IN ADVANCE BY OWNER. THIS DOCUMENT SHALL BE RETURNED TO OWNER UPON REQUEST. IT MAY BE SUBJECT TO CERTAIN RESTRICTIONS UNDER APPLICABLE EXPORT CONTROL LAWS AND REGULATIONS.

Data Sheet

Date: 9/27/2021
Customer:
Attention:
Submitted by:

marathon® Motors

213THFCD8028

Submittal

Data @ 460 V

Motor Load Data

Load	0%	25%	50%	75%	100%	115%	125%	LR	
Current (Amps)	4.5	5.0	6.0	7.5	9.5	10.5	11.5	86.0	
Torque (ft-lb)	0.00	5.5	11.0	16.6	22.2	25.6	27.9	55.8	
RPM	1800	1792	1785	1778	1770	1,765	1762	0	
Efficiency (%)		83.1	89.3	90.8	90.6	90.5	90.3		
P.F. (%)	7.0	40.5	63.0	75.0	80.5	83.5	84.0	42.0	

Motor Speed Data

	LR	Pull-Up	BD	Rated	Idle
Speed (RPM)	0	885	1440	1770	1800
Current (Amps)	86.0	77.4	61.5	9.5	4.5
Torque (ft-lb)	55.8	47.4	85.6	22.2	0.00

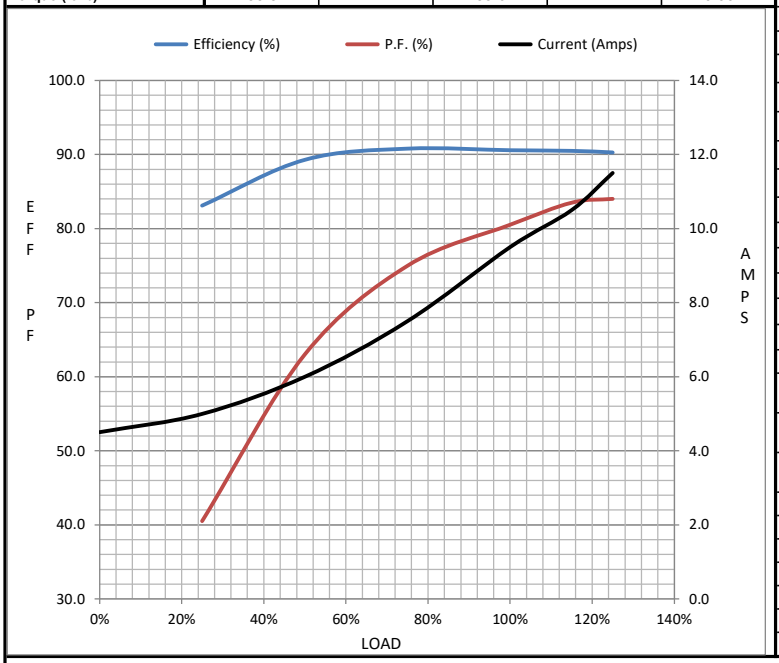

Information Block

HP	7.5	
Sync. RPM	1800	
Frame	213	
Enclosure	TEFC	
Construction	TFS	
Voltage	230/460	V
Frequency	60	Hz
Design	INV	
LR Code letter	L	
Service Factor	1.15	
Temp Rise @ FL	60	° C
Duty	CONT	
Ambient	40	° C
Elevation	3,300	feet
Rotor/Shaft wk²	0.255	Lb-Ft²
Ref Wdg	HA31324030 NONE	
Sound Pressure @ 1M	62	dBA
VFD Rating	CONSTANT 2000:1	
Outline Dwg	SS810151-100	
Conn. Diag	EE7308T	
Additional Specifications:		
0		
0		

EQUIV CKT (OHMS / PHASE)

R1	R2	X1	X2	Xm
0.7110	0.4690	2.5030	2.6770	56.6390

Speed -Torque Curve

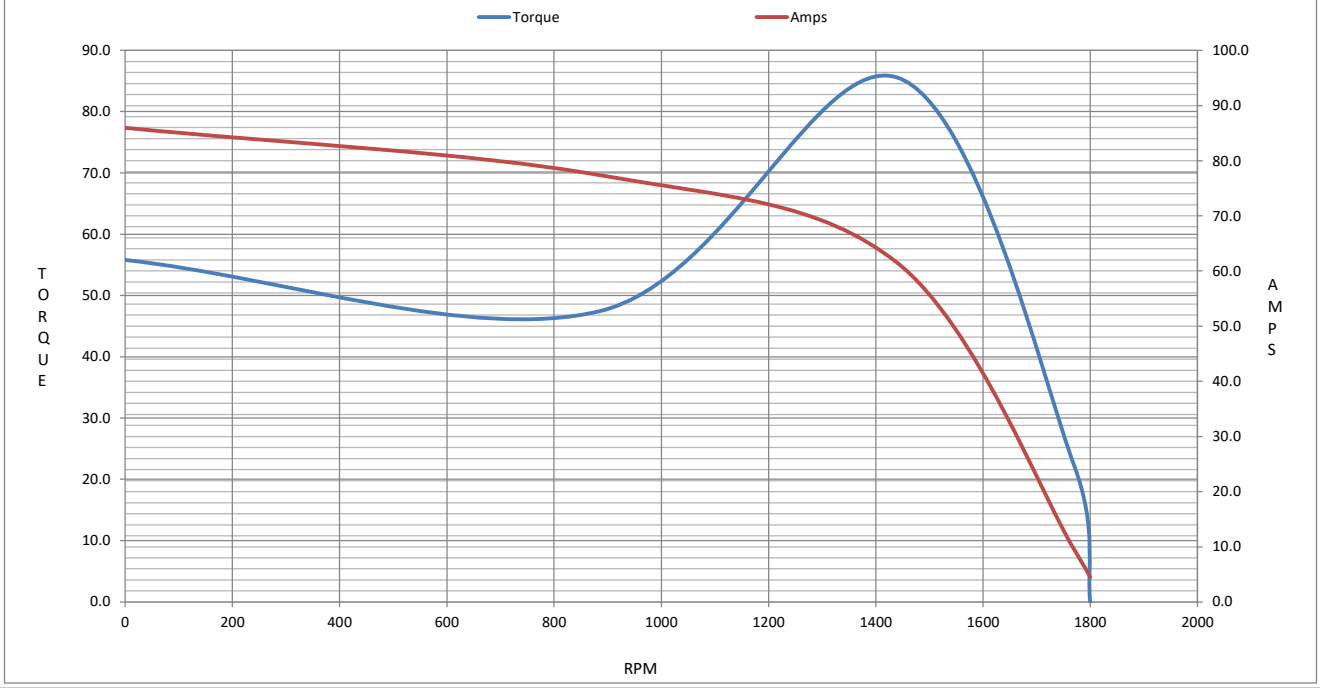

P.O. BOX 8003
WAUSAU, WI 54401-8003
PH. 715-675-3311

marathon® Motors

DATA VOLTS: 460

CERTIFICATION DATA SHEET

CUSTOMER:
ORDER #:
CONN. DIAGRAM: EE7308T
OUTLINE: SS810151-100
WINDING: HA31324030 NONE 2
SPEED:

CUSTOMER P.O. #:
REFERENCE MODEL #: 213THFCD8028
CAT #: Y595A
CUSTOMER PART #:
MOUNTING: F1/F2 CAPABLE

TYPICAL MOTOR PERFORMANCE DATA

HP	KW	SYNC RPM	FL RPM	FRAME	ENCLOSURE	TYPE	KVA CODE	DESIGN
7.5	5.6	1800	1770	213TC	TEFC	TFS	L	INV

PH	HZ	VOLTS	AMPS	START TYPE	DUTY	INSL	S.F.	AMB	ELEV.
3	60	230/460	19/9.5	INVERTER ONLY	CONT	H	1.15	40	3300

F.L. EFF	90.6	3/4 LD EFF	90.8	1/2 LD EFF	89.3	GTD EFF	ELECT. TYPE
F.L. PF	80.5	3/4 LD PF	75.0	1/2 LD PF	63.0	89.9	SQ CAGE INV DUTY

F.L. TORQUE	LR AMPS @ 460 V	L.R. TORQUE	B.D. TORQUE	F.L. RISE (° C)	
22.2 LB-FT	86.0	55.8 LB-FT 251%	85.6 LB-FT 386%	60	

SOUND PRESSURE @ 3 FT.	SOUND POWER	ROTOR WK²	MAX. LOAD WK²	SAFE STALL TIME	STARTS/HOUR	APROX.	MOTOR WGT
62 dBA	71 dBA	0.255 LB-FT²	20 LB-FT²	30 SEC.	2	180	LB.

*** SUPPLEMENTAL INFORMATION ***

DE BRACKET TYPE	ODE BRACKET TYPE	MOUNT TYPE	MOTOR ORIENTATION	SEVERE DUTY	HAZARDOUS LOCATION	DRIP COVER	SCREENS	PAINT
C-FACE	ENCODER	RIGID	HORIZONTAL	NO	NONE	YES	NONE	BLUE (ENAMEL)

BEARINGS		GREASE	SHAFT TYPE	SPECIAL DE	SPECIAL ODE	SHAFT MATERIAL	FRAME MATERIAL
DE	ODE						
BALL	BALL	POLYREX EM	T	NONE	NONE	1045 HOT ROLLED (C-204)	CAST IRON
6309	6208						

THERMOSTATS	PROTECTORS	WDG RTD's	BRG RTD's	THERMISTORS	CONTROL	SPACE HEATERS
TSTATS (N/C)	NOT	NONE	NONE	NONE	FALSE	NA

R1 (ohms/ph)	R2 (ohms/ph)	X1 (ohms/ph)	X2 (ohms/ph)	Xm (ohms/ph)	VIBRATION (in/sec)	FLOAT
0.711	0.469	2.503	2.677	56.639	0.150	ODE

* NOTES *

INVERTER TORQUE: CONSTANT 2000:1
INV. HP SPEED RANGE: 2.0 X BASE SPEED

ENCODER: DYNAPAR
HS35
NONE NONE **PPR**

BRAKE: NONE
NONE NONE
FT-LB: NA
VOLTAGE: NONE **HZ:**
UL: V-INS, CONST, OVERHEAT PRT DEV UL REC

PREPARED BY:
DATE: 9/27/2021

FORM: 3531 REV_4 2/27/06