marathon®

Inverter (Vector) Duty Motors

Model No: 213THFBD7736
Catalog No: Y995A

Inverter (Vector) Duty Motor, 7.50 HP, 3 Ph, 60 Hz, 575 V, 1800 RPM, 213TC Frame, TEFC

©2026 Marathon, All Rights Reserved.

marathon®

Product Information Packet: Model No: 213THFBD7736, Catalog No: Y995A Inverter (Vector) Duty Motor, 7.50 HP, 3 Ph, 60 Hz, 575 V, 1800 RPM, 213TC Frame, TEFC

Nameplate Specifications

Phase	**3**	Output HP	**7.50 Hp**
Output KW	**5.6 kW**	Voltage	**575 V**
Speed	**1770 r/min**	Synchronous RPM	**1800 r/min**
Service Factor	**1.00**	Frame	**213TC**
Enclosure	**Totally Enclosed Fan Cooled**	Thermal Protection	**No Protection**
Efficiency	**90.6 %**	Ambient Temperature	**40 °C**
Frequency	**60 Hz**	Current	**7.6 A**
Power Factor	**80.5**	Duty	**Continuous**
Insulation Class	**H**	Design Code	**INV**
KVA Code	**L**	Drive End Bearing Size	**6307**
Opp Drive End Bearing Size	**6206**	UL	**Recognized**
CSA	**Y**	CE	**Y**
IP Code	**43**	Number of Speeds	**1**

Technical Specifications

Electrical Type	**Squirrel Cage Inverter Duty**	Starting Method	**Inverter Only**
Poles	**4**	Rotation	**Reversible**
Resistance Main	**1.1352 O**	Mounting	**Rigid Base**
Motor Orientation	**Horizontal**	Drive End Bearing	**Ball**
Opp Drive End Bearing	**Ball**	Frame Material	**Rolled Steel**
Shaft Type	**T**	Shaft Diameter	**1.375 in**
Assembly/Box Mounting	**F3**	Inverter Load	**Constant 20:1**

Drawings

Connection Drawing	**EE7300**	Outline Drawing	**SS621036-100**

This is an uncontrolled document once printed or downloaded and is subject to change without notice. Date Created: 15/10/2026

DASH NO.	B	C	D	E	2E	2F	2FF	AG	AH	BA	BV	MOUNTING	FRAME
100	8.00	19.12	5.25	4.25	8.50	5.50	7.00	16.00	3.12	4.25	9.95	F3	213TC
200		20.62						17.50			11.45		215TC

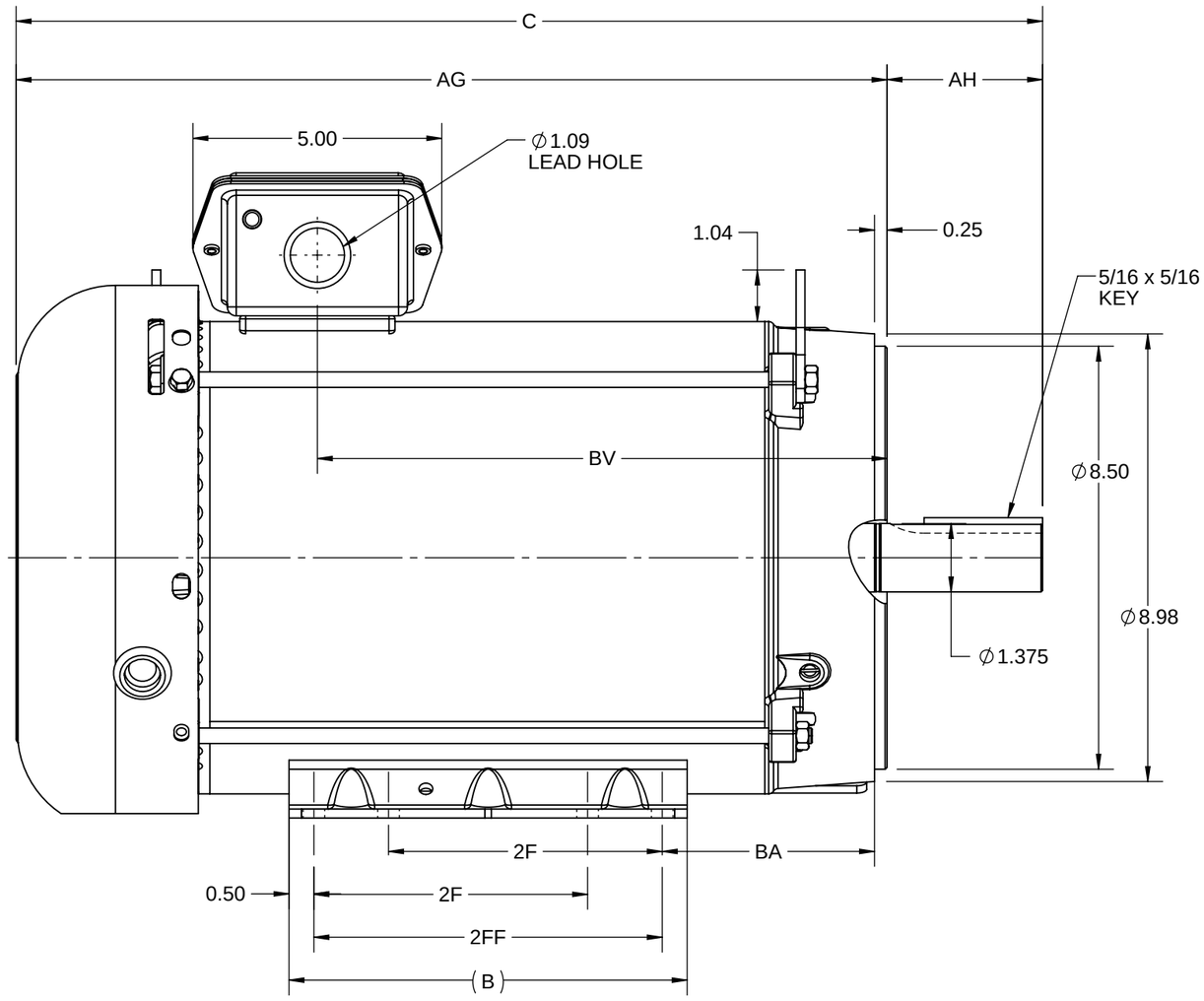

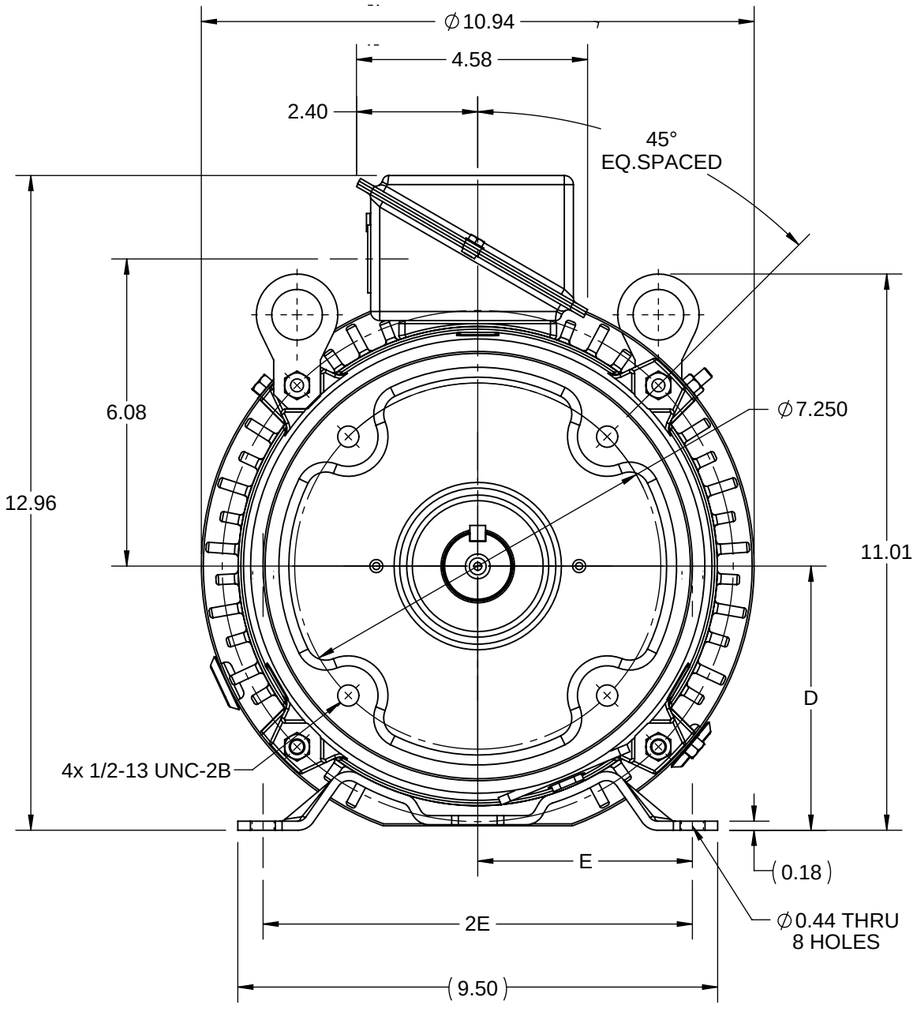

DRAWING REVISION	REVISION BY	REV DATE/© DATE
E	SB	05/19/2026
REQUEST NUMBER	APPROVED BY	DATE
CR-0026322	RMS	05/19/2026
REQUEST NUMBER DESCRIPTION: DRAWING TITLE BLOCK UPDATED		

COPYRIGHT (PER REVISION DATE) MARATHON ELECTRIC, LLC. ALL RIGHTS RESERVED. PROPRIETARY AND CONFIDENTIAL INFORMATION - THIS DOCUMENT IS THE PROPERTY OF MARATHON ELECTRIC, LLC. ("OWNER") AND CONTAINS OWNER'S PROPRIETARY INFORMATION. ANY PERSON, CORPORATION OR OTHER FIRM RECEIVING IT IS DEEMED, BY RECEIVING IT, TO AGREE THAT IT, AND/OR ANY PART OF IT, SHALL NOT BE DISCLOSED TO ANY PERSON, CORPORATION OR OTHER ENTITY, DUPLICATED, AND/OR USED, EXCEPT AS EXPRESSLY APPROVED IN WRITING IN ADVANCE BY OWNER. THIS DOCUMENT SHALL BE RETURNED TO OWNER UPON REQUEST. IT MAY BE SUBJECT TO CERTAIN RESTRICTIONS UNDER APPLICABLE EXPORT CONTROL LAWS AND REGULATIONS.

PRIMARY DIMENSIONS ARE INCH
mm DIMENSIONS IN [BRACKETS]
ARE FOR REFERENCE ONLY

DRAWN BY	SRS
DATE	16/06/2020
APPROVED BY	GNK
DATE	16/06/2020
REFERENCE	
THIRD ANGLE PROJECTION	

marathon™

DESCRIPTION
OUTLINE
213/215TC FR NEMA TEFC RS F3 MTG

MATERIAL | PROCESS/FINISH

SIZE	DRAWING NUMBER	SHEET
B	SS621036	1 OF 1

THREE PHASE - SINGLE VOLTAGE
MOTOR - CONDUIT BOX @ 'A'

TO REVERSE ROTATION:
INTERCHANGE ANY TWO LINE
LEAD CONNECTIONS

IF MOTOR HAS
9 LEADS

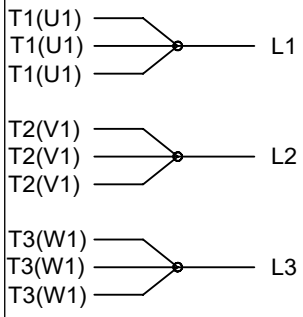

IF MOTOR HAS
6 LEADS

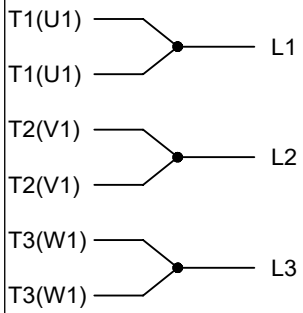

A-9806 DECAL

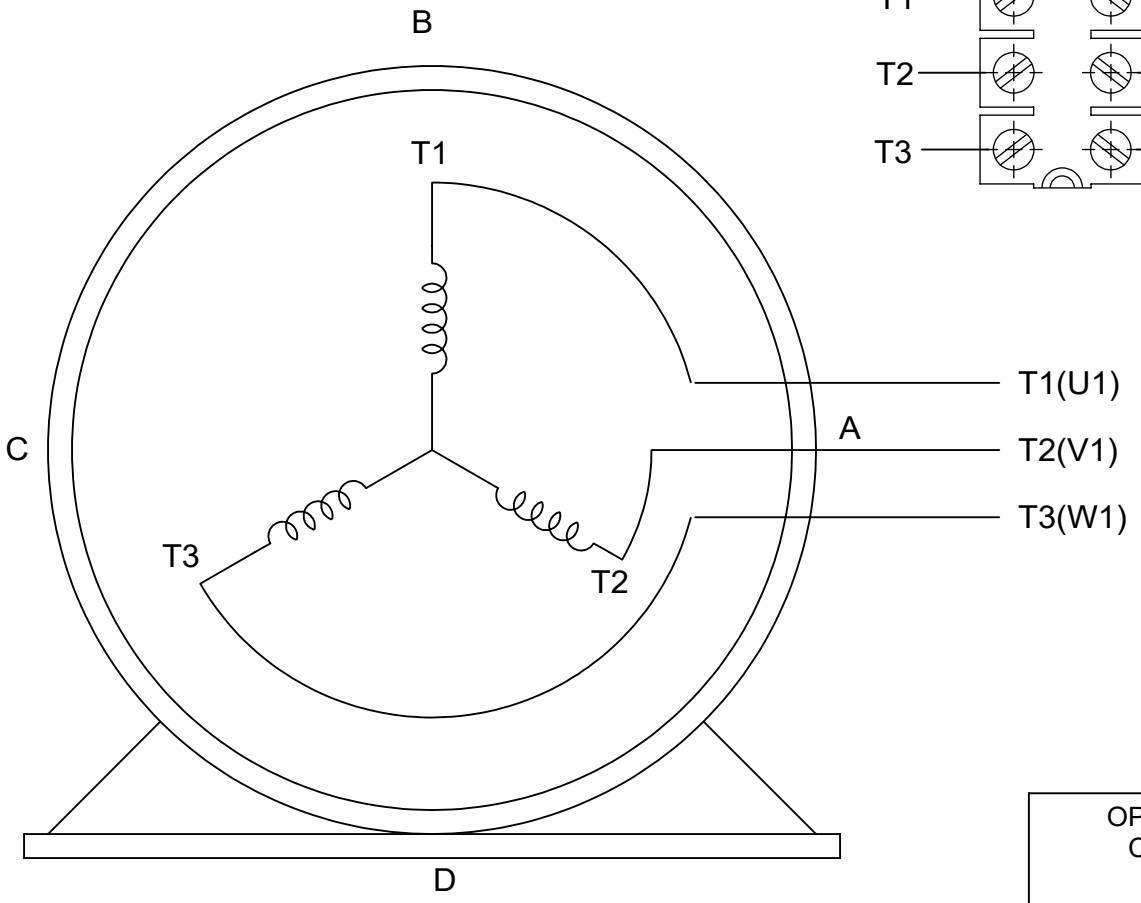

VIEW OF TERMINAL END

TERMINAL BLOCK WHEN SPECIFIED

OPTIONAL CORD
CONNECTION

L1	WHITE
L2	RED
L3	BLACK

DRAWING REVISION: AD	REVISION BY: SB	REV DATE/© DATE: 08/01/2025
REQUEST NUMBER: CR-0023654	APPROVED BY: SBD	DATE: 08/01/2025

REQUEST NUMBER DESCRIPTION
DRAWING TITLE BLOCK UPDATED

COPYRIGHT (PER REVISION DATE) MARATHON ELECTRIC, LLC. ALL RIGHTS RESERVED. PROPRIETARY AND CONFIDENTIAL INFORMATION - THIS DOCUMENT IS THE PROPERTY OF MARATHON ELECTRIC, LLC. ("OWNER") AND CONTAINS OWNER'S PROPRIETARY INFORMATION. ANY PERSON, CORPORATION OR OTHER FIRM RECEIVING IT IS DEEMED, BY RECEIVING IT, TO AGREE THAT IT, AND/OR ANY PART OF IT, SHALL NOT BE DISCLOSED TO ANY PERSON, CORPORATION OR OTHER ENTITY, DUPLICATED, AND/OR USED, EXCEPT AS EXPRESSLY APPROVED IN WRITING IN ADVANCE BY OWNER. THIS DOCUMENT SHALL BE RETURNED TO OWNER UPON REQUEST. IT MAY BE SUBJECT TO CERTAIN RESTRICTIONS UNDER APPLICABLE EXPORT CONTROL LAWS AND REGULATIONS.

PRIMARY DIMENSIONS ARE INCH
mm DIMENSIONS IN [BRACKETS]
ARE FOR REFERENCE ONLY

DRAWN BY: DA	
DATE: 03-26-1993	
APPROVED BY: TB	
DATE: 03-26-1993	
REFERENCE	
THIRD ANGLE PROJECTION	

marathon™

DESCRIPTION
CONNECTION DIAGRAM
EXTERNAL - SINGLE VOLTAGE - 3Ø MOTOR

MATERIAL	PROCESS/FINISH

SIZE	DRAWING NUMBER	SHEET
A	EE7300	1 OF 1

Data Sheet

Date: 11/17/2021
Customer:
Attention:
Submitted by:

marathon® Motors

213THFBD7736

Submittal

Data @ 575 V

Motor Load Data

Load	0%	25%	50%	75%	100%	115%	125%	LR	
Current (Amps)	3.6	4.0	4.8	6.0	7.6	8.4	9.2	68.8	
Torque (ft-lb)	0.00	5.5	11.0	16.6	22.2	25.6	27.9	55.8	
RPM	1800	1792	1785	1778	1770	1,765	1762	0	
Efficiency (%)		83.1	89.3	90.8	90.6	90.5	90.3		
P.F. (%)	7.0	40.5	63.0	75.0	80.5	83.5	84.0	42.0	

Motor Speed Data

	LR	Pull-Up	BD	Rated	Idle
Speed (RPM)	0	885	1440	1770	1800
Current (Amps)	68.8	61.9	49.2	7.6	3.6
Torque (ft-lb)	55.8	47.4	85.6	22.2	0.00

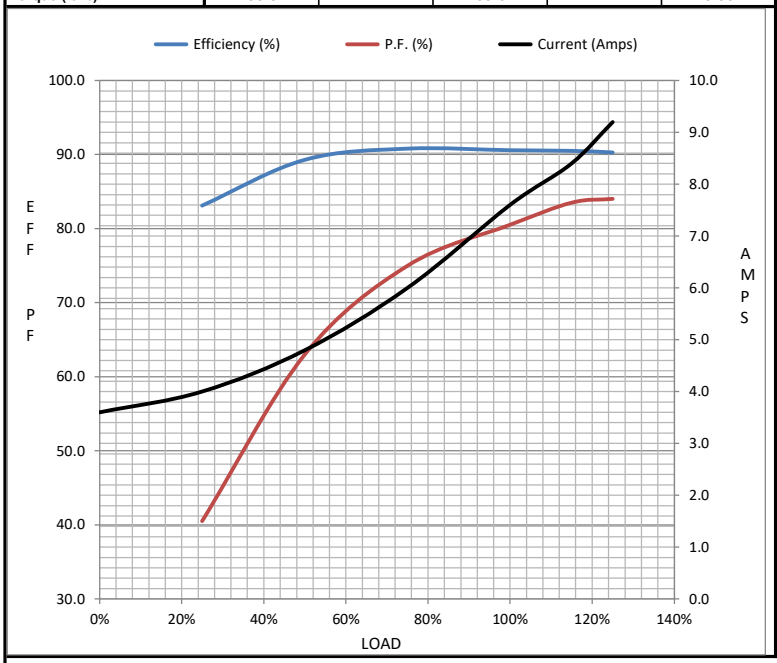

Information Block

HP	7.5	
Sync. RPM	1800	
Frame	213	
Enclosure	TEFC	
Construction	TFS	
Voltage	575	V
Frequency	60	Hz
Design	INV	
LR Code letter	L	
Service Factor	1.15	
Temp Rise @ FL	60	° C
Duty	CONT	
Ambient	40	° C
Elevation	3,300	feet
Rotor/Shaft wk²	1.02	Lb-Ft²
Ref Wdg	HA31324030 NONE	
Sound Pressure @ 1M	62	dBA
VFD Rating	CONSTANT 20:1	
Outline Dwg	SS621036-100	
Conn. Diag	EE7300	

Additional Specifications:

0

0

EQUIV CKT (OHMS / PHASE)

R1	R2	X1	X2	Xm
1.1110	0.7330	3.9110	4.1830	88.4990

Speed -Torque Curve

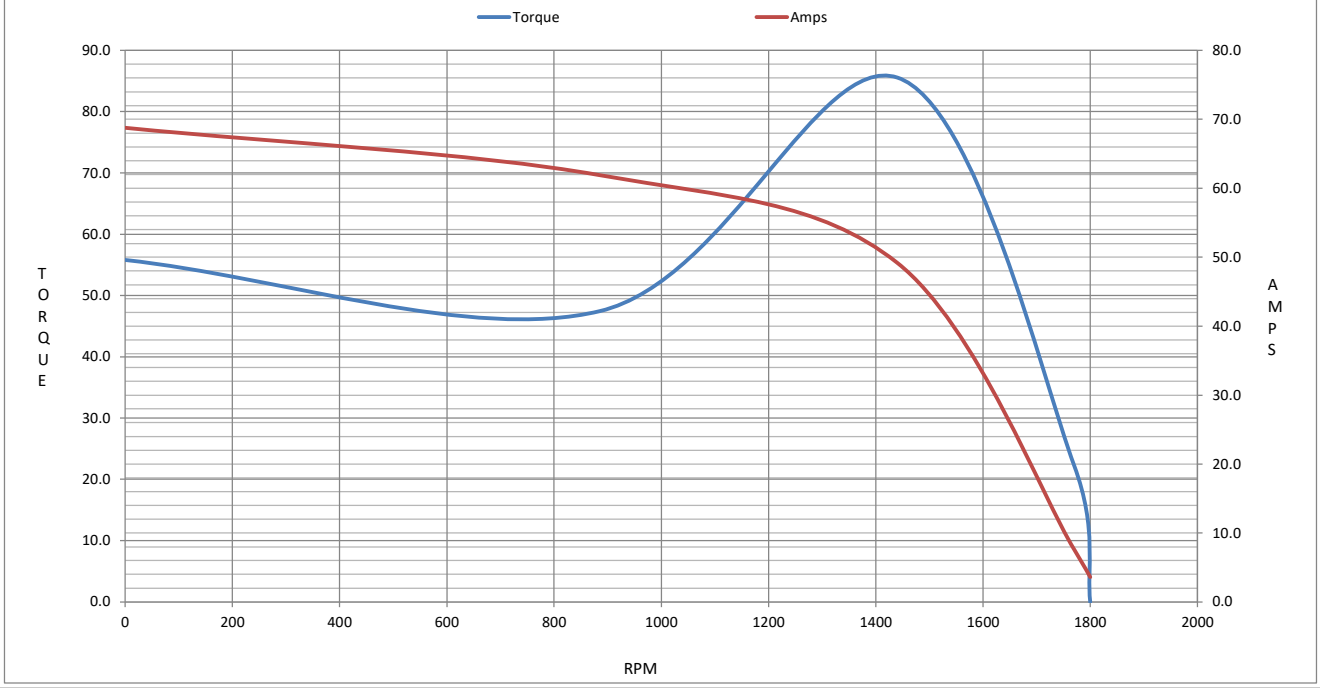

P.O. BOX 8003
WAUSAU, WI 54401-8003
PH. 715-675-3311

marathon® Motors

DATA VOLTS: 575

CERTIFICATION DATA SHEET

CUSTOMER:
ORDER #:
CONN. DIAGRAM: EE7300
OUTLINE: SS621036-100
WINDING: HA31324030 NONE 3
SPEED:

CUSTOMER P.O. #:
REFERENCE MODEL #: 213THFBD7736
CAT #: Y995A
CUSTOMER PART #:
MOUNTING: F3

TYPICAL MOTOR PERFORMANCE DATA

HP	KW	SYNC RPM	FL RPM	FRAME	ENCLOSURE	TYPE	KVA CODE	DESIGN
7.5	5.6	1800	1770	213TC	TEFC	TFS	L	INV

PH	HZ	VOLTS	AMPS	START TYPE	DUTY	INSL	S.F.	AMB	ELEV.
3	60	575	7.6	INVERTER ONLY	CONT	H	1.15	40	3300

F.L. EFF	90.6	3/4 LD EFF	90.8	1/2 LD EFF	89.3	GTD EFF	ELECT. TYPE
F.L. PF	80.5	3/4 LD PF	75.0	1/2 LD PF	63.0	89.9	SQ CAGE INV DUTY

F.L. TORQUE	LR AMPS @ 460 V	L.R. TORQUE	B.D. TORQUE	F.L. RISE (° C)	
22.2 LB-FT	68.8	55.8 LB-FT 251%	85.6 LB-FT 386%	60	

SOUND PRESSURE @ 3 FT.	SOUND POWER	ROTOR WK²	MAX. LOAD WK²	SAFE STALL TIME	STARTS/HOUR	APROX. MOTOR WGT
62 dBA	71 dBA	1.02 LB-FT²	16 LB-FT²	30 SEC.	2	175 LB.

*** SUPPLEMENTAL INFORMATION ***

DE BRACKET TYPE	ODE BRACKET TYPE	MOUNT TYPE	MOTOR ORIENTATION	SEVERE DUTY	HAZARDOUS LOCATION	DRIP COVER	SCREENS	PAINT
C-FACE	STANDARD	RIGID	HORIZONTAL	NO	NONE	YES	NONE	BLUE (ENAMEL)

BEARINGS DE	BEARINGS ODE	GREASE	SHAFT TYPE	SPECIAL DE	SPECIAL ODE	SHAFT MATERIAL	FRAME MATERIAL
BALL	BALL	POLYREX EM	T	NONE	NONE	1045 HOT ROLLED (C-204)	ROLLED STEEL
6307	6206						

THERMOSTATS	PROTECTORS	WDG RTD's	BRG RTD's	THERMISTORS	CONTROL	SPACE HEATERS
NONE	NOT	NONE	NONE	NONE	FALSE	NA

R1 (ohms/ph)	R2 (ohms/ph)	X1 (ohms/ph)	X2 (ohms/ph)	Xm (ohms/ph)	VIBRATION (in/sec)	FLOAT
1.7359375	1.1453125	6.1109375	6.5359375	138.2796875	0.150	ODE

*
NOTES
*

INVERTER TORQUE: CONSTANT 20:1
INV. HP SPEED RANGE: 2.0 X BASE SPEED

ENCODER: NONE
NONE
NONE NONE PPR

BRAKE: NONE
NONE NONE
FT-LB: NA
VOLTAGE: NONE HZ:

PREPARED BY:
DATE: 11/17/2021

FORM: 3531 REV_4 2/27/06

UL: V - LI,ME-INS,CONST UL REC