marathon®

Explosion Proof Motors

Model No: 184TTGN6501
Catalog No: U061A

Explosion Proof Motor, 5 & 3 HP, 3 Ph, 60 & 50 Hz, 230/460 & 190/380 V, 3600 RPM, 184T Frame, EPFC

©2026 Marathon, All Rights Reserved.

marathon®

Product Information Packet: Model No: 184TTGN6501, Catalog No: U061A Explosion Proof Motor, 5 & 3 HP, 3 Ph, 60 & 50 Hz, 230/460 & 190/380 V, 3600 RPM, 184T Frame, EPFC

Nameplate Specifications

Phase	**3**	Output HP	**5 & 3 Hp**
Output KW	**3.7 & 2.2 kW**	Voltage	**230/460 & 190/380 V**
Speed	**3505 & 2930 r/min**	Synchronous RPM	**3600 & 3000 r/min**
Service Factor	**1.15 & 1.15**	Frame	**184T**
Enclosure	**Explosion Proof Fan cooled**	Thermal Protection	**Thermostat**
Efficiency	**88.5 & 87.5 %**	Ambient Temperature	**40 °C**
Frequency	**60 & 50 Hz**	Current	**11.8/5.9 & 9/4.5 A**
Power Factor	**88.5**	Duty	**Continuous**
Insulation Class	**F**	Design Code	**B**
KVA Code	**J**	Drive End Bearing Size	**6206**
Opp Drive End Bearing Size	**6206**	UL	**UL Listed And CSA Certified**
CSA	**Y**	CE	**N**
IP Code	**54**	Number of Speeds	**1**
Hazardous Location	**DIV 1 EXP PROOF CL I GR CD CL II GR FG T3B**		

Technical Specifications

Electrical Type	**Squirrel Cage Inverter Rated**	Starting Method	**Line Or Inverter**
Poles	**2**	Rotation	**Reversible**
Resistance Main	**2.32 O**	Mounting	**Rigid Base**
Motor Orientation	**Horizontal**	Drive End Bearing	**Ball**
Opp Drive End Bearing	**Ball**	Frame Material	**Cast Iron**
Shaft Type	**T**	Overall Length	**17.87 in**
Frame Length	**10.0 in**	Shaft Diameter	**1 1/8 in**
Shaft Extension	**2.85 in**	Assembly/Box Mounting	**F1 Only**
Inverter Load	**Constant 10:1**		

Drawings

Connection Drawing	**A-EE7308T**	Outline Drawing	**035660-1000**

This is an uncontrolled document once printed or downloaded and is subject to change without notice. Date Created: 16/10/2026

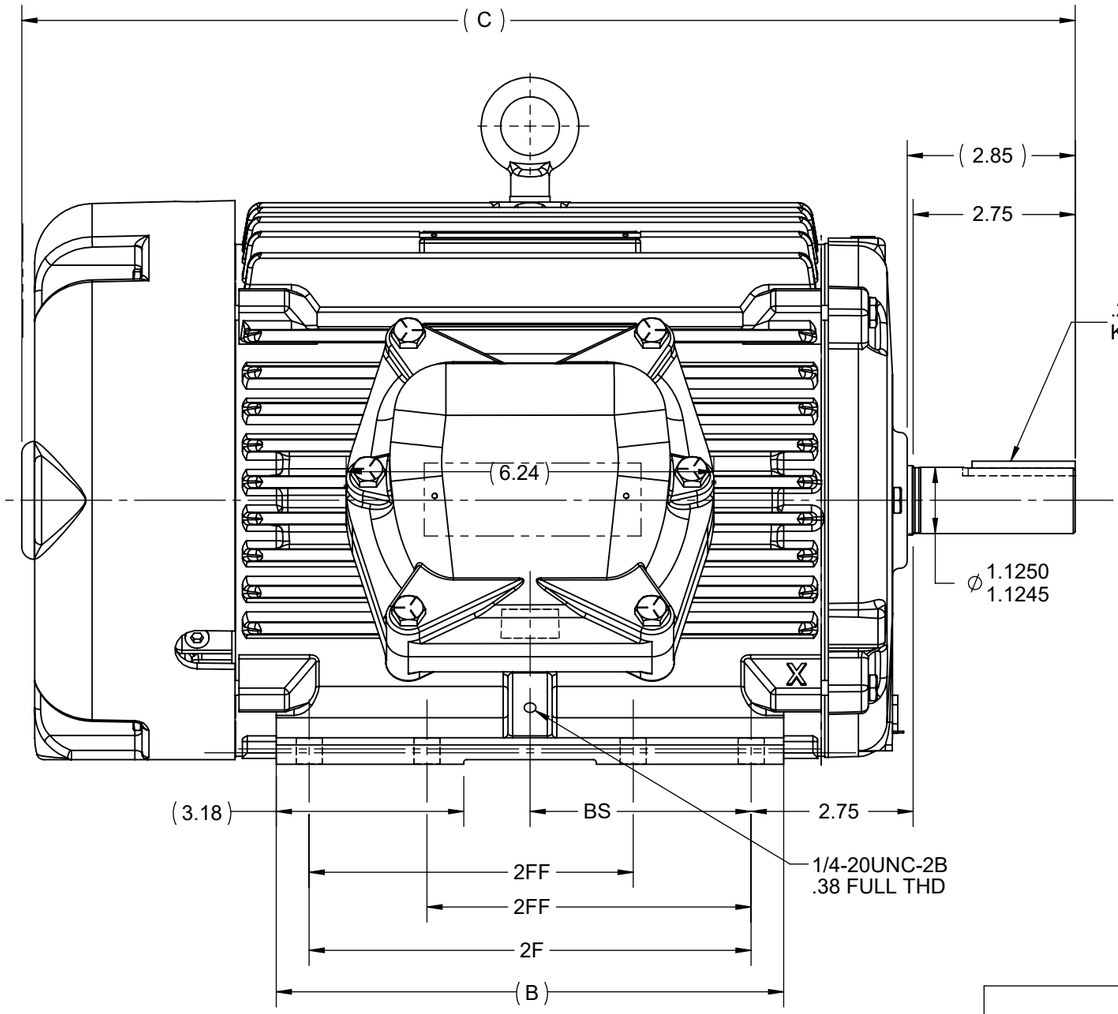

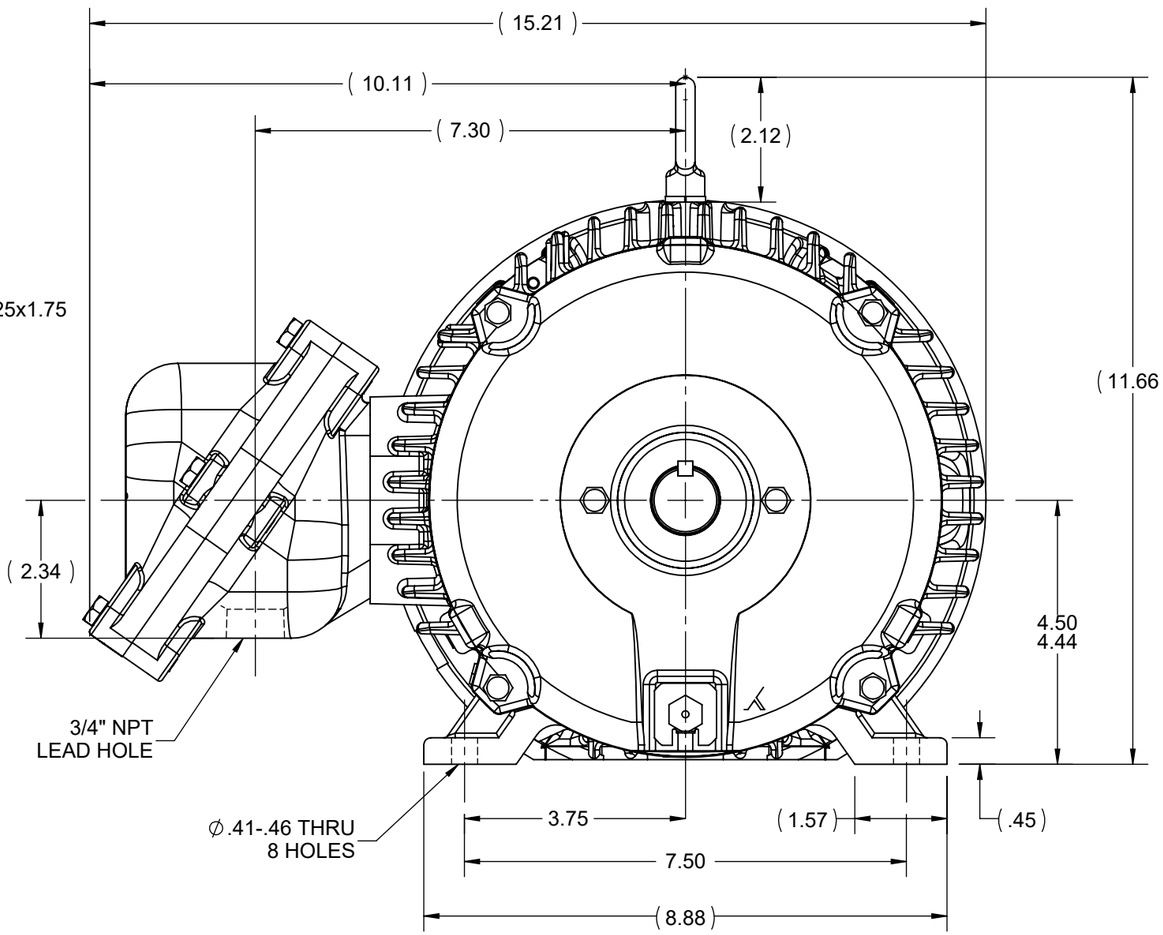

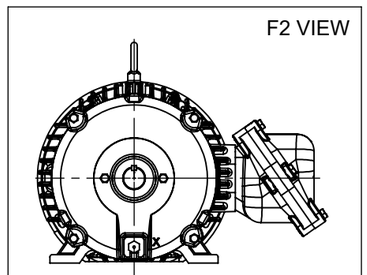

NOTES:
1. NAMEPLATE TO BE READ FROM CONDUIT BOX SIDE OF MOTOR.
2. CONDUIT BOX CAN ROTATED IN 90° STEPS.
3. CONDUIT BOX CAN MOUNTED ON OPPOSITE SIDE BY REMOVING BRACKETS AND TURNING FRAME 180°. THIS MODIFICATION CAN BE PERFORMED ONLY BY THE ORIGINAL EQUIPMENT MANUFACTURER, OR BY A FACILITY THAT IS COVERED UNDER UNDERWRITERS LABORATORIES INC. CATEGORY PTKQ. TITLED "MOTORS AND GENERATORS REBUILT FOR USE IN HAZARDOUS LOCATIONS."

DASH	FRAME	C	B	2F	2FF	BS
1000	184	17.88	8.61	7.50	5.50	3.75
800	182/184	15.88	6.61	5.50	4.50	2.75

DRAWING REVISION	REVISION BY	REV DATE/© DATE
H	MN	07/09/2025
REQUEST NUMBER	APPROVED BY	DATE
NMR-0237951	MANJUNATH	07/09/2025

REQUEST NUMBER DESCRIPTION
UPDATED BS IN DRAWING

COPYRIGHT (PER REVISION DATE) MARATHON ELECTRIC, LLC. ALL RIGHTS RESERVED. PROPRIETARY AND CONFIDENTIAL INFORMATION - THIS DOCUMENT IS THE PROPERTY OF MARATHON ELECTRIC, LLC. ("OWNER") AND CONTAINS OWNER'S PROPRIETARY INFORMATION. ANY PERSON, CORPORATION OR OTHER FIRM RECEIVING IT IS DEEMED, BY RECEIVING IT, TO AGREE THAT IT, AND/OR ANY PART OF IT, SHALL NOT BE DISCLOSED TO ANY PERSON, CORPORATION OR OTHER ENTITY, DUPLICATED, AND/OR USED, EXCEPT AS EXPRESSLY APPROVED IN WRITING IN ADVANCE BY OWNER. THIS DOCUMENT SHALL BE RETURNED TO OWNER UPON REQUEST. IT MAY BE SUBJECT TO CERTAIN RESTRICTIONS UNDER APPLICABLE EXPORT CONTROL LAWS AND REGULATIONS.

TOLERANCES (EXCEPT AS NOTED):

DEC.	INCH	mm	ANGLE
.X	±0.1	[±3]	±7' 30"
.XX	±0.03	[±0.8]	
.XXX	±0.005	[±0.13]	
.XXXX	±0.0005	[±0.013]	

REMOVE BURRS & BREAK SHARP EDGES: .003/.015 [.08/.38] X 45°
CORNER FILLETS: R.02 [.5]
MACHINED SURFACES: 200 INCH / 5.1 mm
mm DIMENSIONS IN [BRACKETS] ARE FOR REFERENCE ONLY

DRAWN BY	CTO
DATE	07-05-2007
APPROVED BY	SW
DATE	3/26/2008
REFERENCE	

marathon™

DESCRIPTION
OUTLINE
180 FR.

MATERIAL | PROCESS/FINISH

THIRD ANGLE PROJECTION

SIZE B | DRAWING NUMBER 035660 | SHEET 1 OF 1

HIGH VOLTAGE

(U1) T1 — L1
(V1) T2 — L2
(W1) T3 — L3
(U2) T4
(U3) T7
(V2) T5
(V3) T8
(W2) T6
(W3) T9

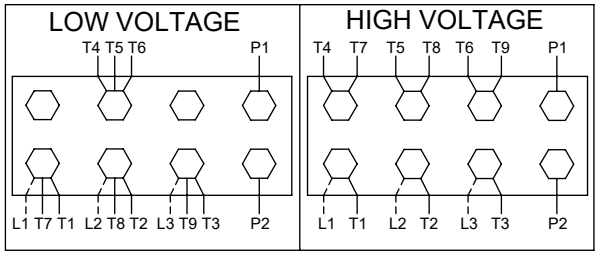

THREE PHASE DUAL VOLTAGE MOTOR

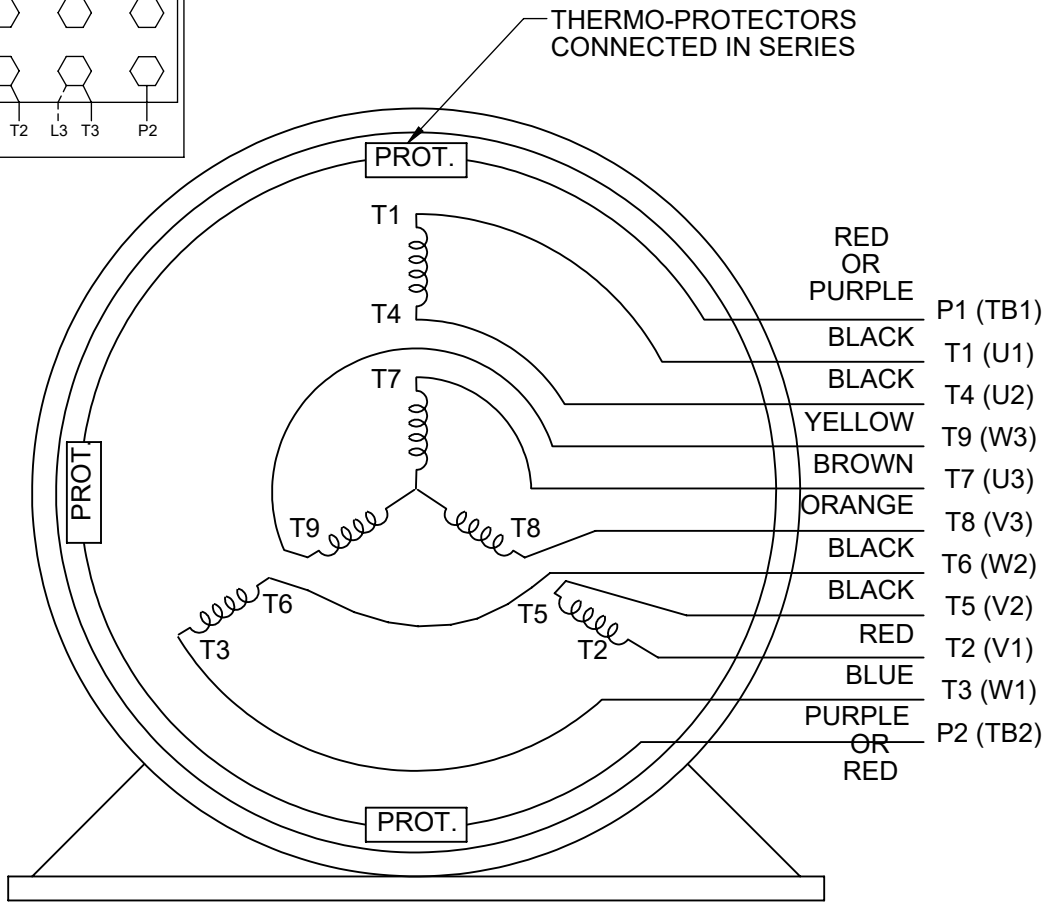

VIEW OF TERMINAL END

NOTE FOR FACTORY USE ONLY:
TO SURGE TEST FOR COMMON CONNECT:
HIGH VOLT: CONNECT P1 TO T1
THEN P2 TO L1
LOW VOLT: CONNECT P1 TO T1 & T7,
THEN P2 TO L1

LOW VOLTAGE

(U1) T1
(U3) T7 — L1
(V1) T2
(V3) T8 — L2
(W1) T3
(W3) T9 — L3
(U2) T4
(V2) T5
(W2) T6

NOTE: LEAD'S COLOR CAN BE YELLOW OR WHITE FOR IMG PLANT

DRAWING REVISION: U	REVISION BY: SB	REV DATE/© DATE: 08/01/2025	PRIMARY DIMENSIONS ARE INCH mm DIMENSIONS IN [BRACKETS] ARE FOR REFERENCE ONLY	DRAWN BY: SMC	marathon™
REQUEST NUMBER: CR-0023654	APPROVED BY: SBD	DATE: 08/01/2025		DATE: 05-13-1992	
REQUEST NUMBER DESCRIPTION: DRAWING TITLE BLOCK UPDATED				APPROVED BY: TB	DESCRIPTION: CONN DIAGRAM-EXTERNAL
				DATE: 05-13-1992	3 PHASE - DUAL VOLTAGE MOTOR
				REFERENCE: EE7308/EE7300	MATERIAL / PROCESS/FINISH
				THIRD ANGLE PROJECTION	SIZE: A — DRAWING NUMBER: EE7308T — SHEET: 1 OF 1

COPYRIGHT (PER REVISION DATE) MARATHON ELECTRIC, LLC. ALL RIGHTS RESERVED. PROPRIETARY AND CONFIDENTIAL INFORMATION - THIS DOCUMENT IS THE PROPERTY OF MARATHON ELECTRIC, LLC. ("OWNER") AND CONTAINS OWNER'S PROPRIETARY INFORMATION. ANY PERSON, CORPORATION OR OTHER FIRM RECEIVING IT IS DEEMED, BY RECEIVING IT, TO AGREE THAT IT, AND/OR ANY PART OF IT, SHALL NOT BE DISCLOSED TO ANY PERSON, CORPORATION OR OTHER ENTITY, DUPLICATED, AND/OR USED, EXCEPT AS EXPRESSLY APPROVED IN WRITING IN ADVANCE BY OWNER. THIS DOCUMENT SHALL BE RETURNED TO OWNER UPON REQUEST. IT MAY BE SUBJECT TO CERTAIN RESTRICTIONS UNDER APPLICABLE EXPORT CONTROL LAWS AND REGULATIONS.

Uncontrolled Copy

Data Sheet

Date: 20-06-2017
Customer:
Attention:
Submitted by: FAREEDA DUDEKULA

marathon® electric

184TTGN6501

Submittal

Data @ 460 V

Motor Load Data

Load	0%	25%	50%	75%	100%	115%	125%	LR	
Current (Amps)	2.00	2.40	3.4	4.5	5.9	6.7	7.4	45.0	
Torque (ft-lb)	0.00	1.80	3.7	5.5	7.5	8.6	9.4	15.7	
RPM	3600	3580	3560	3535	3505	3,490	3480	0	
Efficiency (%)		83.1	88.4	89.0	88.5	88.0	87.5		
P.F. (%)	11.5	58.6	77.5	85.5	88.5	89.2	89.8	43.5	

Motor Speed Data

	LR	Pull-Up	BD	Rated	Idle
Speed (RPM)	0	650	2914	3505	3600
Current (Amps)	45.0	43.5	28.7	5.9	2.00
Torque (ft-lb)	15.7	13.5	24.2	7.5	0.00

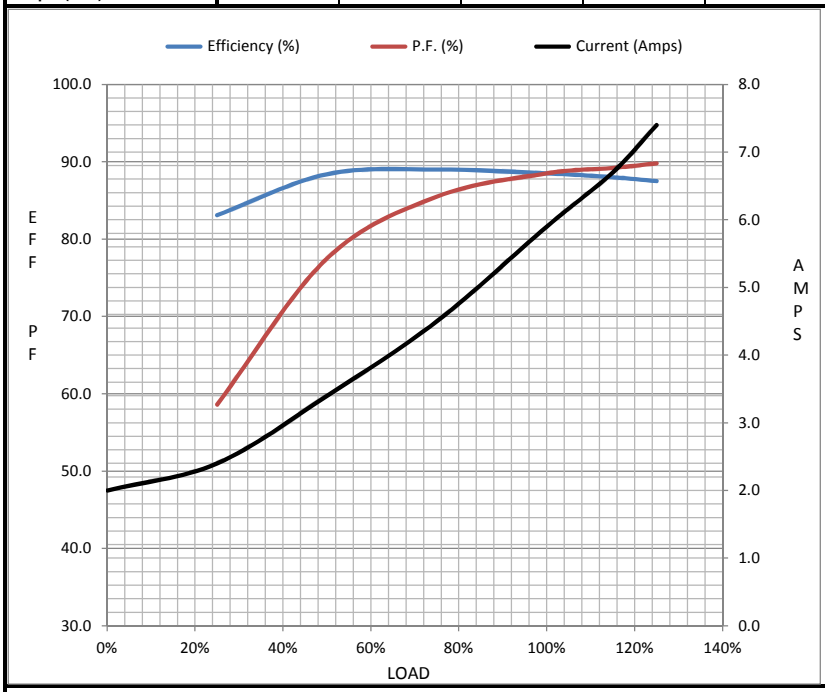

Information Block

HP	5.0
Sync. RPM	3600
Frame	184
Enclosure	TEFC
Construction	TFS
Voltage	230/460#190/38(V
Frequency	60 Hz
Design	B
LR Code letter	J
Service Factor	1.15
Temp Rise @ FL	50 ° C
Duty	CONT
Ambient	40 ° C
Elevation	1,000 feet
Rotor/Shaft wk²	0.30 Lb-Ft²
Ref Wdg	1842180 FN
Sound Pressure @ 1M	72 dBA
VFD Rating	CONSTANT 10:1
Outline Dwg	035660-1000
Conn. Diag	A-EE7308T

Additional Specifications:

0

365THFS8036

EQUIV CKT (OHMS / PHASE)

R1	R2	X1	X2	Xm
1.3920	1.1300	4.8110	1.8460	124.9600

Speed -Torque Curve

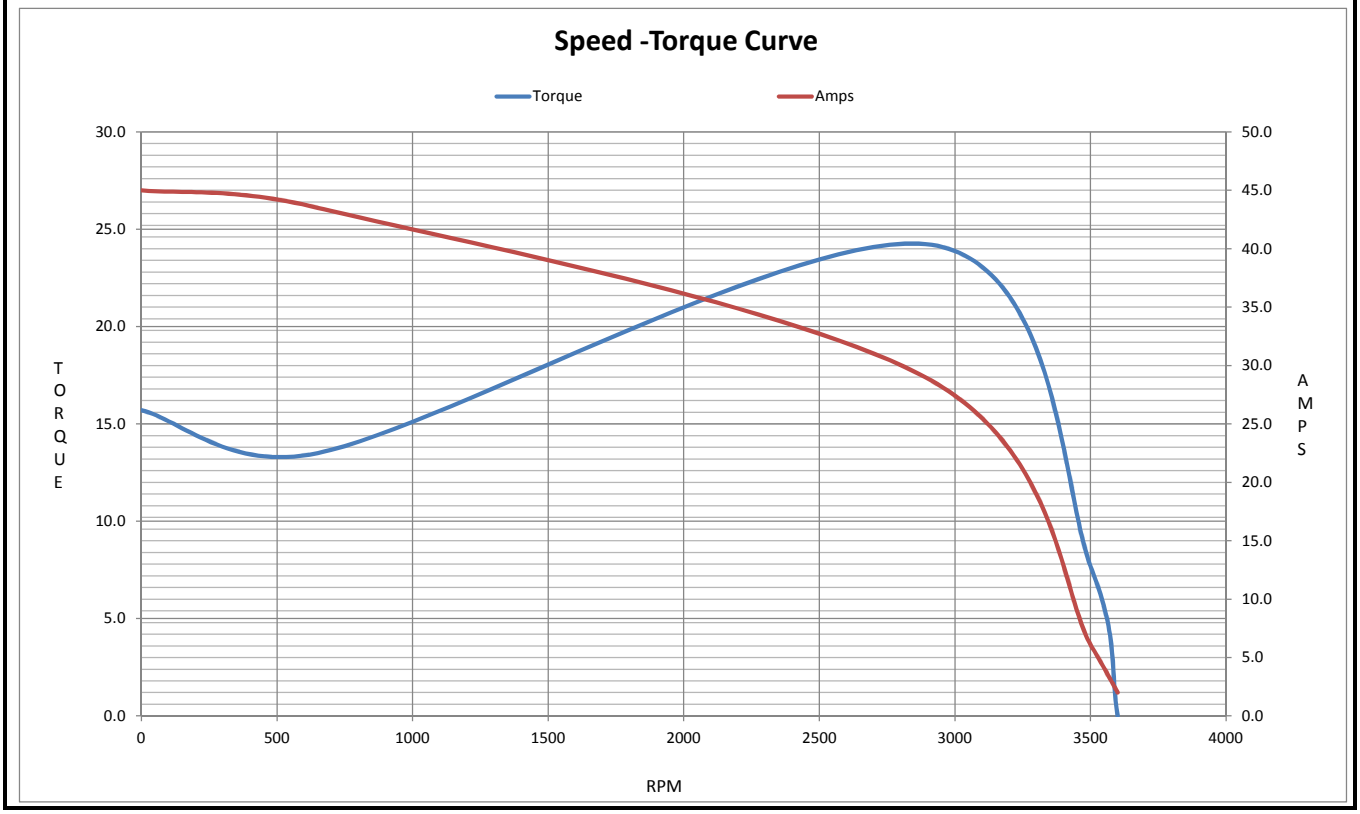

Uncontrolled Copy

CERTIFICATION DATA SHEET

Model#:	184TTGN6501 AA	**WINDING#:**	1842180 FN 1
CONN. DIAGRAM:	A-EE7308T	**ASSEMBLY:**	F1 ONLY
OUTLINE:	035660-1000		

TYPICAL MOTOR PERFORMANCE DATA

HP	KW	SYNC. RPM	F.L. RPM	FRAME	ENCLOSURE	KVA CODE	DESIGN
5&3	3.70&2.24	3600	3505&2920	184T	EPFC	J	B

PH	Hz	VOLTS	FL AMPS	START TYPE	DUTY	INSL	S.F	AMB°C	ELEVATION
3	60/50	230/460#190/380	11.8/5.9&9/4.5	LINE OR INVERTER	CONTINUOUS	F3	1.15/1.15	40	3300

FULL LOAD EFF: 88.5&88.5	3/4 LOAD EFF: 89	1/2 LOAD EFF: 88.4	GTD. EFF	ELEC. TYPE	NO LOAD AMPS
FULL LOAD PF: 88.5&86	3/4 LOAD PF: 85.5	1/2 LOAD PF: 77.5	86.5	SQ CAGE INV RATED	4 / 2

F.L. TORQUE	LOCKED ROTOR AMPS	L.R. TORQUE	B.D. TORQUE	F.L. RISE°C
7.5 LB-FT	90 / 45	15.7 LB-FT 209	24.2 LB-FT 323	50

SOUND PRESSURE @ 3 FT.	SOUND POWER	ROTOR WK^2	MAX. WK^2	SAFE STALL TIME	STARTS /HOUR	APPROX. MOTOR WGT
72 dBA	82 dBA	0.3 LB-FT^2	5 LB-FT^2	15 SEC.	2	125 LBS.

*** SUPPLEMENTAL INFORMATION ***

DE BRACKET TYPE	ODE BRACKET TYPE	MOUNT TYPE	ORIENTATION	SEVERE DUTY	HAZARDOUS LOCATION	DRIP COVER	SCREENS	PAINT
STANDARD	STANDARD	RIGID	HORIZONTAL	TRUE	EXP PROOF CL I GR D CL II GR F&G T3B	FALSE	NONE	BLUE (EPOXY)

BEARINGS		GREASE	SHAFT TYPE	SPECIAL DE	SPECIAL ODE	SHAFT MATERIAL	FRAME MATERIAL
DE	OPE						
BALL	BALL	POLYREX EM	T	NONE	NONE	1144 STRESSPROOF (C-223)	CAST IRON
6206	6206						

THERMO-PROTECTORS				THERMISTORS	CONTROL	SPACE /n HEATERS
THERMOSTATS	PROTECTORS	WDG RTDs	BRG RTDs			
TSTATS (N/C)	NOT	NONE	NONE	NONE	FALSE	NONE VOLTS

If Inverter equals NONE, contact factory for further information

INVERTER TORQUE: CONSTANT 10:1
INV. HP SPEED RANGE: NONE

ENCODER: NONE
NONE NONE
NONE NONE PPR

BRAKE: NONE NONE
NONE P/N NONE
NONE NONE
NONE FT-LB NONE V NONE Hz

*
NOTES
*

DATE: 06/21/2017 11:41:36 AM
FORM 3531 REV.3 02/07/99

** Subject to change without notice.