# Explosion Proof Motors

**Model No:** 184TTGCD6537
**Catalog No:** C369B

Explosion Proof Motor, 5 HP, 3 Ph, 60 Hz, 575 V, 1800 RPM, 184TC Frame, EPFC

©2026 Marathon, All Rights Reserved.

marathon®

# Product Information Packet: Model No: 184TTGCD6537, Catalog No: C369B  Explosion Proof Motor, 5 HP, 3 Ph, 60 Hz, 575 V, 1800 RPM, 184TC Frame, EPFC

## Nameplate Specifications

| | | | |
|---|---|---|---|
| Phase | **3** | Output HP | **5 Hp** |
| Output KW | **3.7 kW** | Voltage | **575 V** |
| Speed | **1755 r/min** | Synchronous RPM | **1800 r/min** |
| Service Factor | **1.00** | Frame | **184TC** |
| Enclosure | **Explosion Proof Fan cooled** | Thermal Protection | **Thermostat** |
| Efficiency | **89.5 %** | Ambient Temperature | **50 °C** |
| Frequency | **60 Hz** | Current | **5.2 A** |
| Power Factor | **80** | Duty | **Continuous** |
| Insulation Class | **F** | Design Code | **B** |
| KVA Code | **J** | Drive End Bearing Size | **6207** |
| Opp Drive End Bearing Size | **6206** | UL | **UL Listed And CSA Certified** |
| CSA | **Y** | CE | **N** |
| IP Code | **54** | Number of Speeds | **1** |
| Hazardous Location | **DIV 1 EXP PROOF CL I GR CD CL II GR FG T3C** | | |

## Technical Specifications

| | | | |
|---|---|---|---|
| Electrical Type | **Squirrel Cage Inverter Rated** | Starting Method | **Line Or Inverter** |
| Poles | **4** | Rotation | **Reversible** |
| Resistance Main | **2.69 O** | Mounting | **Rigid Base** |
| Motor Orientation | **Horizontal** | Drive End Bearing | **Ball** |
| Opp Drive End Bearing | **Ball** | Frame Material | **Cast Iron** |
| Shaft Type | **T** | Shaft Diameter | **1.125 in** |
| Assembly/Box Mounting | **F1 Only** | Inverter Load | **Constant 10:1** |

## Drawings

| | | | |
|---|---|---|---|
| Connection Drawing | **A-EE7300T** | Outline Drawing | **035673-800** |

This is an uncontrolled document once printed or downloaded and is subject to change without notice. Date Created: 13/10/2026

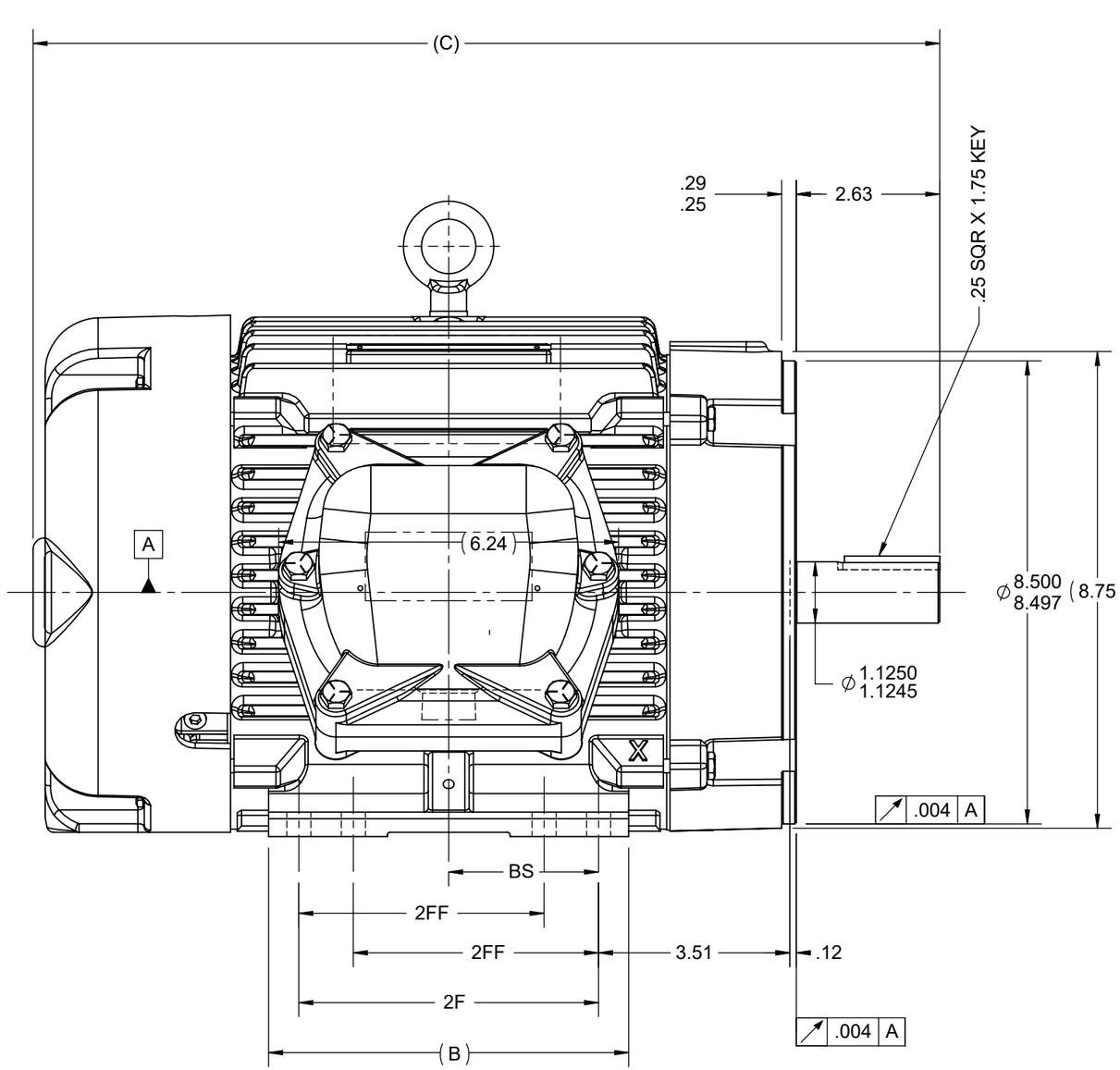


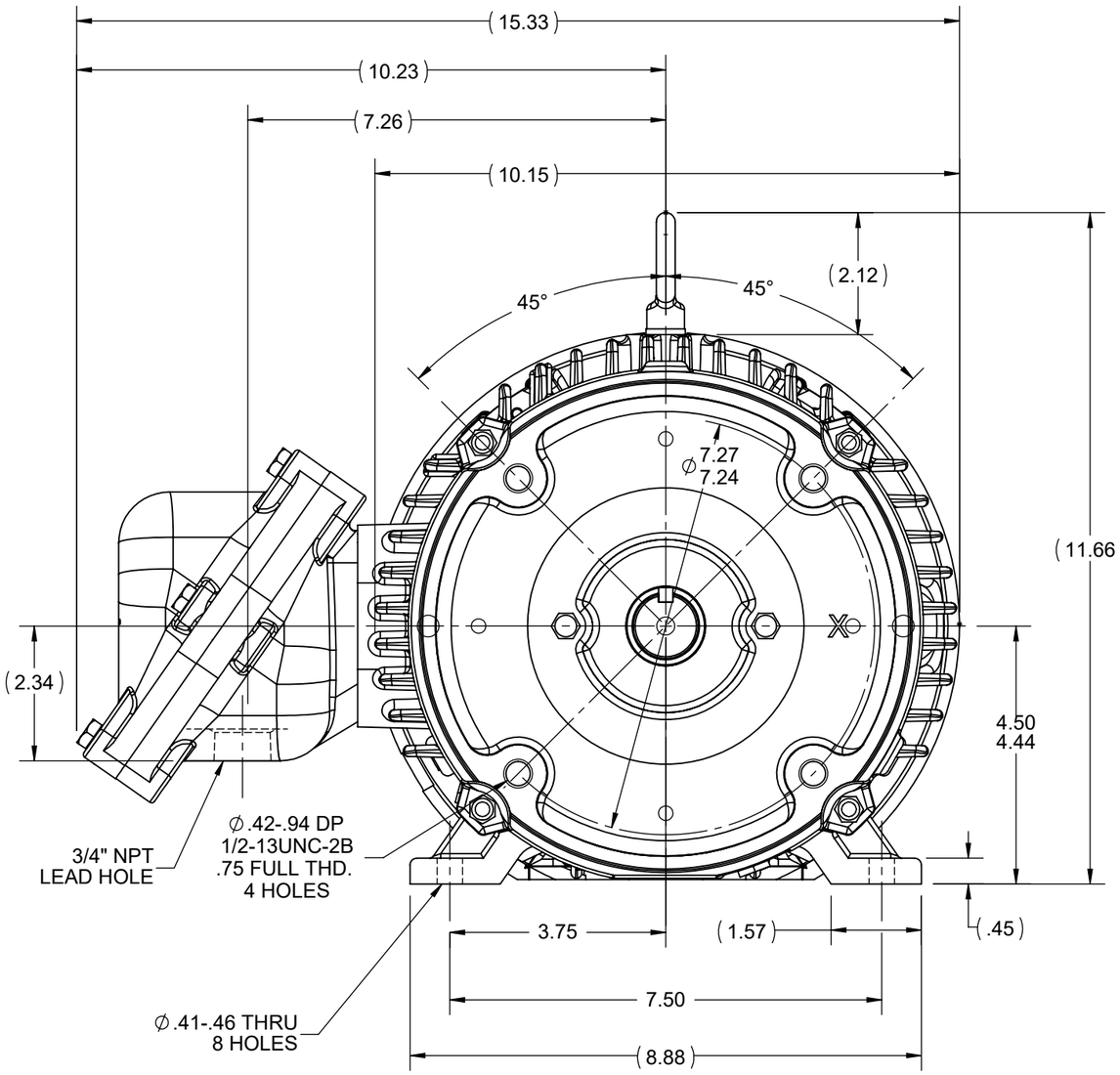


NOTES:
1. NAMEPLATE TO BE READ FROM CONDUIT BOX SIDE OF MOTOR.
2. CONDUIT BOX CAN ROTATED IN 90° STEPS.
3. CONDUIT BOX CAN BE MOUNTED ON OPPOSITE SIDE BY REMOVING BRACKETS AND TURNING FRAME 180°

| | | | | | | |
|---|---|---|---|---|---|---|
| 1000 | 182/184 | 18.63 | 8.61 | 7.50 | 5.50 | 3.75 |
| 800 | 182/184 | 16.63 | 6.61 | 5.50 | 4.50 | 2.75 |
| DASH | FRAME | C | B | 2F | 2FF | BS |

| | | |
|---|---|---|
| DRAWING REVISION D | REVISION BY SB | REV DATE/© DATE 07/24/2025 |
| REQUEST NUMBER CR-0023556 | APPROVED BY SBD | DATE 07/24/2025 |
| REQUEST NUMBER DESCRIPTION: DRAWING TITLE BLOCK UPDATED | | |

COPYRIGHT (PER REVISION DATE) MARATHON ELECTRIC, LLC. ALL RIGHTS RESERVED. PROPRIETARY AND CONFIDENTIAL INFORMATION - THIS DOCUMENT IS THE PROPERTY OF MARATHON ELECTRIC, LLC. ("OWNER") AND CONTAINS OWNER'S PROPRIETARY INFORMATION. ANY PERSON, CORPORATION OR OTHER FIRM RECEIVING IT IS DEEMED, BY RECEIVING IT, TO AGREE THAT IT, AND/OR ANY PART OF IT, SHALL NOT BE DISCLOSED TO ANY PERSON, CORPORATION OR OTHER ENTITY, DUPLICATED, AND/OR USED, EXCEPT AS EXPRESSLY APPROVED IN WRITING IN ADVANCE BY OWNER. THIS DOCUMENT SHALL BE RETURNED TO OWNER UPON REQUEST. IT MAY BE SUBJECT TO CERTAIN RESTRICTIONS UNDER APPLICABLE EXPORT CONTROL LAWS AND REGULATIONS.

PRIMARY DIMENSIONS ARE INCH
mm DIMENSIONS IN [BRACKETS]
ARE FOR REFERENCE ONLY

| | |
|---|---|
| DRAWN BY | TJW |
| DATE | 3/25/2008 |
| APPROVED BY | SW |
| DATE | 3/26/2008 |
| REFERENCE | |
| THIRD ANGLE PROJECTION | |

marathon™

DESCRIPTION
# OUTLINE
180 FR. EPFC - C FACE - CAST C'BOX

MATERIAL | PROCESS/FINISH

SIZE B | DRAWING NUMBER 035673 | SHEET 1 OF 1

THREE PHASE - SINGLE VOLTAGE
MOTOR - CONDUIT BOX @ 'A'

TO REVERSE ROTATION:
INTERCHANGE ANY TWO LINE
LEAD CONNECTIONS

NOTE FOR FACTORY USE ONLY:
TO SURGE TEST:
FOR 3 LEAD COMMON CONNECT:
CONNECT P1 TO T1 THEN P2 TO L1
FOR 6 LEAD COMMON CONNECT:
CONNECT P1 TO BOTH T1
THEN P2 TO L1

TERMINIAL BLOCK WHEN SPECIFIED

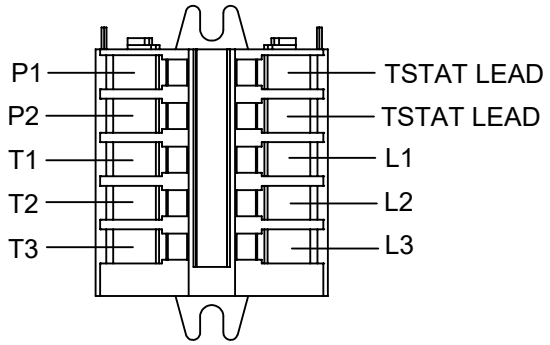


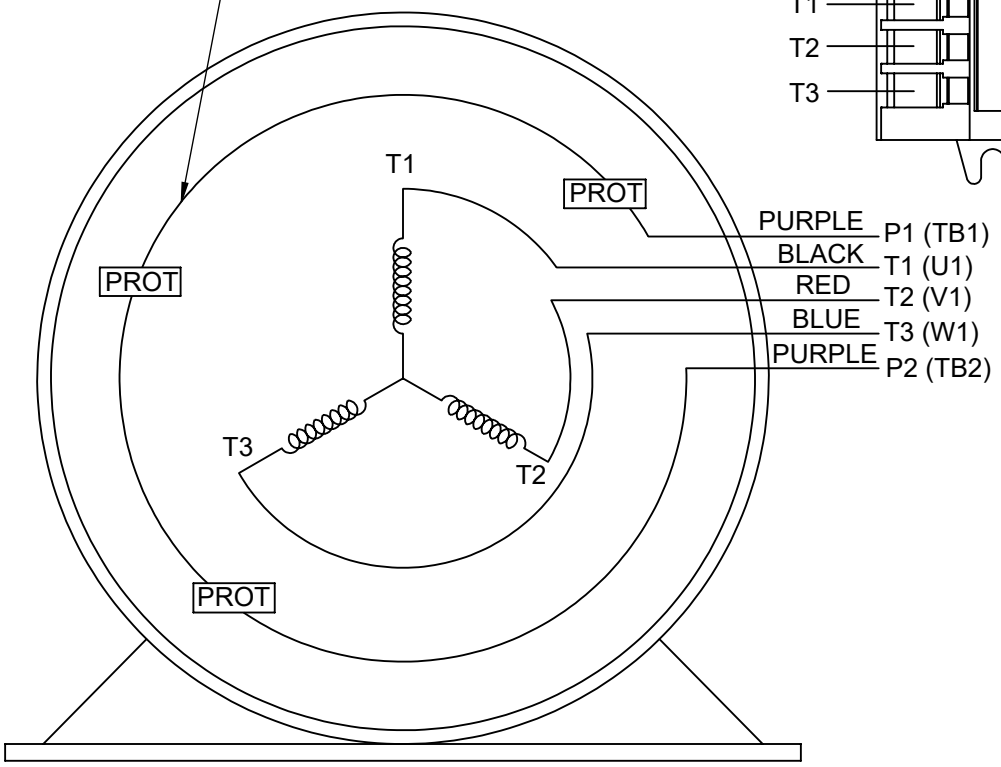


VIEW OF TERMINAL END

IF MOTOR HAS MULTIPLE
T'S PER LEAD CONNECT
TOGETHER LIKE T'S

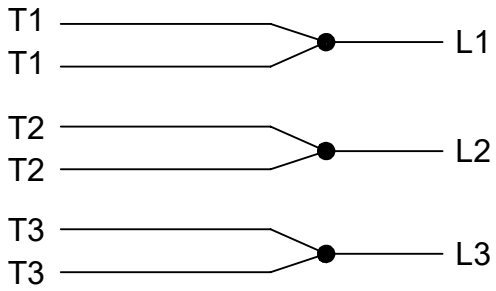


A-9806 DECAL

T2BM
T6AW
T6AL
T6Z
T4EG
T4BF
T8A
T6H
T6A
T4AX
T4A
T2A
T2F

| | | | | | |
|---|---|---|---|---|---|
| DRAWING REVISION<br>AC | REVISION BY<br>SB | REV DATE/© DATE<br>08/01/2025 | PRIMARY DIMENSIONS ARE INCH<br>mm DIMENSIONS IN [BRACKETS]<br>ARE FOR REFERENCE ONLY | DRAWN BY<br>LZ | marathon™ |
| REQUEST NUMBER<br>CR-0023654 | APPROVED BY<br>SBD | DATE<br>08/01/2025 | | DATE<br>01-04-1994 | |
| REQUEST NUMBER DESCRIPTION<br>DRAWING TITLE BLOCK UPDATED | | | | APPROVED BY<br>GK | DESCRIPTION<br>CONN DIAGRAM-EXTERNAL<br>3Ø-SINGLE VOLT-MOTOR WITH PROTECTOR |
| | | | | DATE<br>01-20-1994 | |
| | | | | REFERENCE | MATERIAL / PROCESS/FINISH |
| | | | | THIRD ANGLE PROJECTION | SIZE A / DRAWING NUMBER EE7300T / SHEET 1 OF 1 |

COPYRIGHT (PER REVISION DATE) MARATHON ELECTRIC, LLC. ALL RIGHTS RESERVED. PROPRIETARY AND CONFIDENTIAL INFORMATION - THIS DOCUMENT IS THE PROPERTY OF MARATHON ELECTRIC, LLC. ("OWNER") AND CONTAINS OWNER'S PROPRIETARY INFORMATION. ANY PERSON, CORPORATION OR OTHER FIRM RECEIVING IT IS DEEMED, BY RECEIVING IT, TO AGREE THAT IT, AND/OR ANY PART OF IT, SHALL NOT BE DISCLOSED TO ANY PERSON, CORPORATION OR OTHER ENTITY, DUPLICATED, AND/OR USED, EXCEPT AS EXPRESSLY APPROVED IN WRITING IN ADVANCE BY OWNER. THIS DOCUMENT SHALL BE RETURNED TO OWNER UPON REQUEST. IT MAY BE SUBJECT TO CERTAIN RESTRICTIONS UNDER APPLICABLE EXPORT CONTROL LAWS AND REGULATIONS.