marathon®

Explosion Proof Motors

Model No: 184TTGCD6501
Catalog No: U061B

Explosion Proof Motor, 5 & 3 HP, 3 Ph, 60 & 50 Hz, 230/460 & 190/380 V, 3600 RPM, 184T Frame, EPFC

©2026 Marathon, All Rights Reserved.

marathon®

Product Information Packet: Model No: 184TTGCD6501, Catalog No: U061B Explosion Proof Motor, 5 & 3 HP, 3 Ph, 60 & 50 Hz, 230/460 & 190/380 V, 3600 RPM, 184T Frame, EPFC

Nameplate Specifications

Phase	**3**	Output HP	**5 & 3 Hp**
Output KW	**3.7 & 2.2 kW**	Voltage	**230/460 & 190/380 V**
Speed	**3510 & 2925 r/min**	Synchronous RPM	**3600 & 3000 r/min**
Service Factor	**1.00 & 1.00**	Frame	**184T**
Enclosure	**Explosion Proof Fan cooled**	Thermal Protection	**Thermostat**
Efficiency	**88.5 & 85.5 %**	Ambient Temperature	**50 °C**
Frequency	**60 & 50 Hz**	Current	**12/6 & 9.4/4.7 A**
Power Factor	**88**	Duty	**Continuous**
Insulation Class	**F**	Design Code	**B**
KVA Code	**J**	Drive End Bearing Size	**6206**
Opp Drive End Bearing Size	**6206**	UL	**UL Listed And CSA Certified**
CSA	**Y**	CE	**N**
IP Code	**54**	Number of Speeds	**1**
Hazardous Location	**DIV 1 EXP PROOF CL I GR CD CL II GR FG T3C**		

Technical Specifications

Electrical Type	**Squirrel Cage Inverter Rated**	Starting Method	**Line Or Inverter**
Poles	**2**	Rotation	**Reversible**
Resistance Main	**3.55 O**	Mounting	**Rigid Base**
Motor Orientation	**Horizontal**	Drive End Bearing	**Ball**
Opp Drive End Bearing	**Ball**	Frame Material	**Cast Iron**
Shaft Type	**T**	Shaft Diameter	**1.125 in**
Assembly/Box Mounting	**F1 Only**	Inverter Load	**Constant 10:1**

Drawings

Connection Drawing	**EE7308T**	Outline Drawing	**035660-800**

This is an uncontrolled document once printed or downloaded and is subject to change without notice. Date Created: 16/10/2026

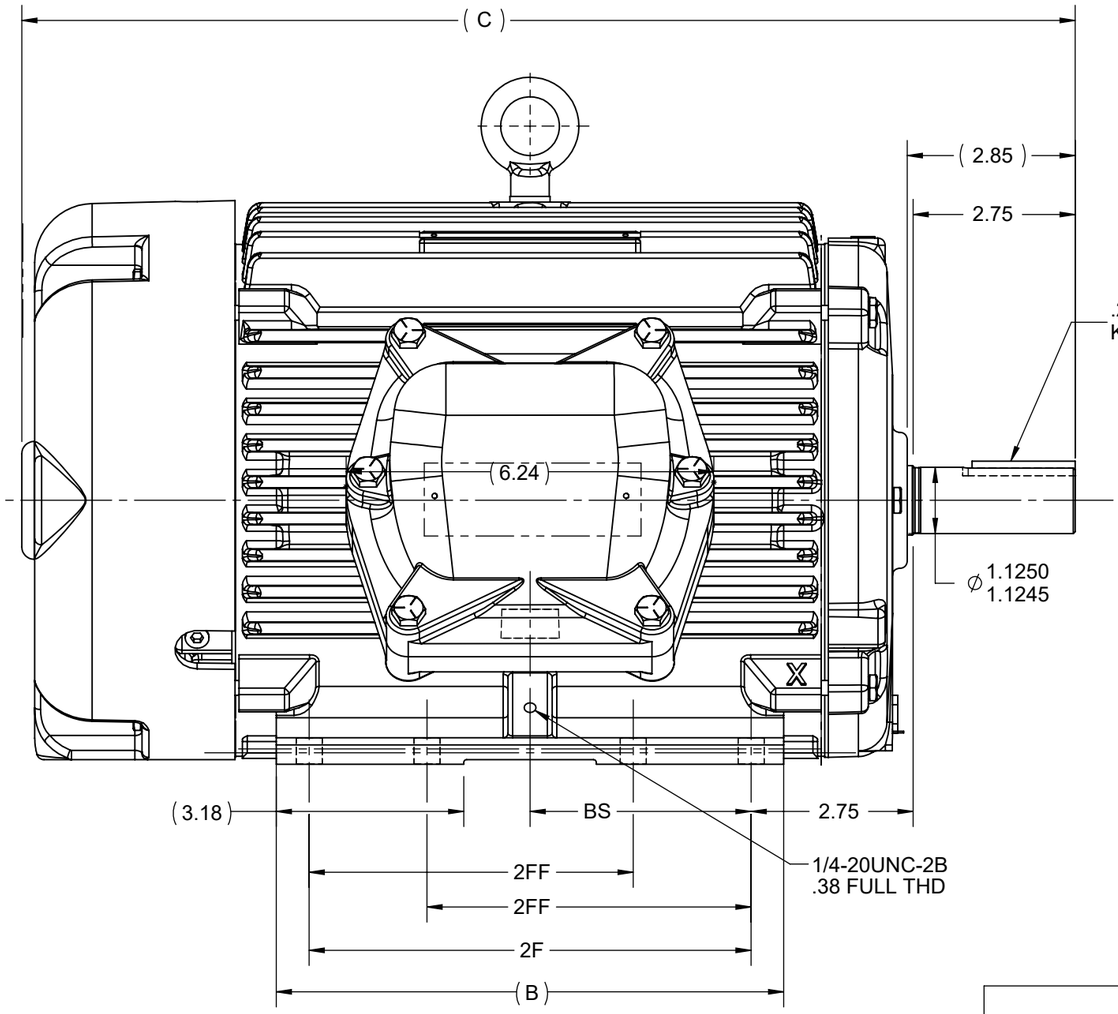

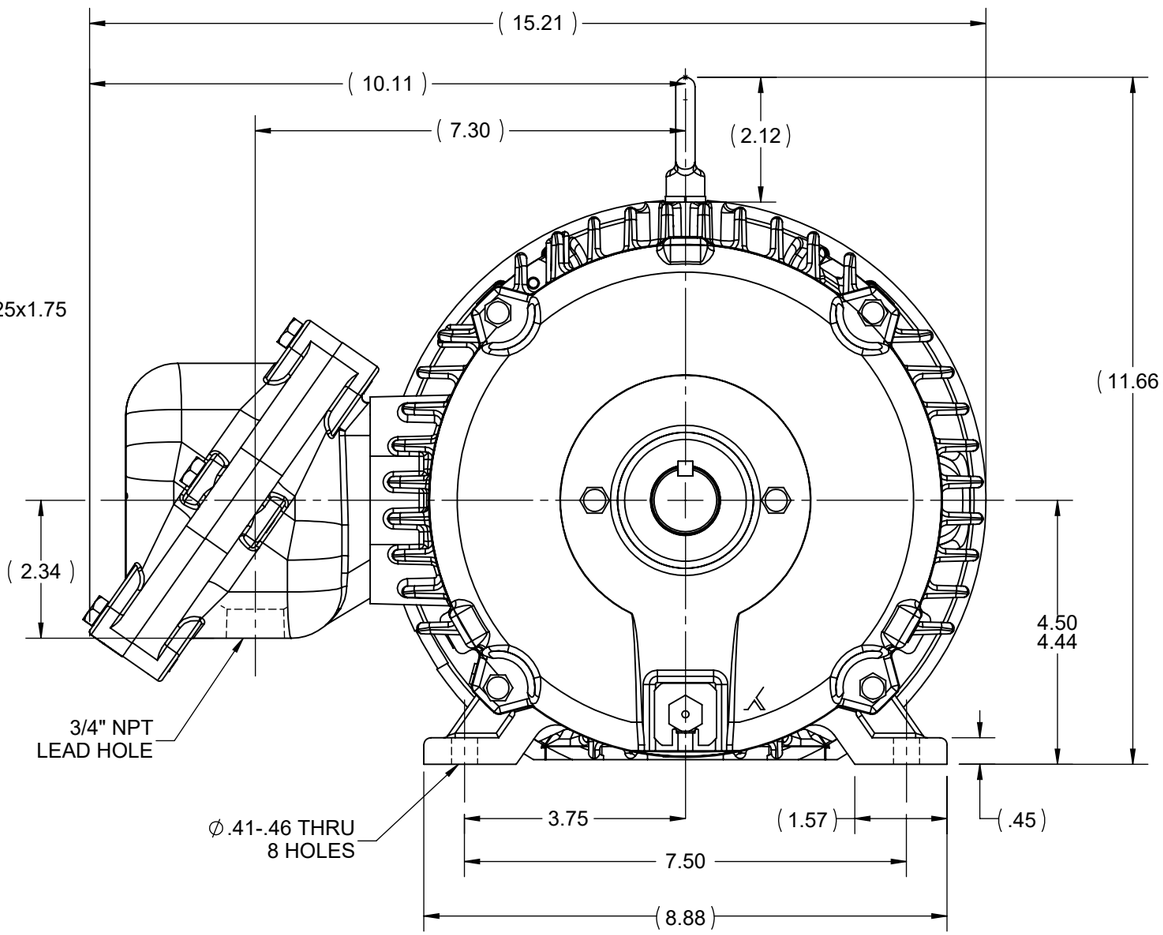

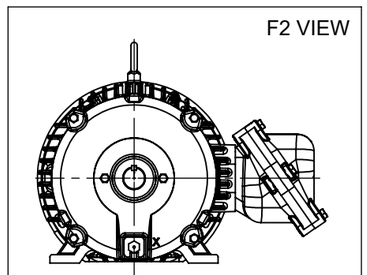

NOTES:
1. NAMEPLATE TO BE READ FROM CONDUIT BOX SIDE OF MOTOR.
2. CONDUIT BOX CAN ROTATED IN 90° STEPS.
3. CONDUIT BOX CAN MOUNTED ON OPPOSITE SIDE BY REMOVING BRACKETS AND TURNING FRAME 180°. THIS MODIFICATION CAN BE PERFORMED ONLY BY THE ORIGINAL EQUIPMENT MANUFACTURER, OR BY A FACILITY THAT IS COVERED UNDER UNDERWRITERS LABORATORIES INC. CATEGORY PTKQ. TITLED "MOTORS AND GENERATORS REBUILT FOR USE IN HAZARDOUS LOCATIONS."

DASH	FRAME	C	B	2F	2FF	BS
1000	184	17.88	8.61	7.50	5.50	3.75
800	182/184	15.88	6.61	5.50	4.50	2.75

DRAWING REVISION	REVISION BY	REV DATE/© DATE
H	MN	07/09/2025
REQUEST NUMBER	APPROVED BY	DATE
NMR-0237951	MANJUNATH	07/09/2025

REQUEST NUMBER DESCRIPTION
UPDATED BS IN DRAWING

COPYRIGHT (PER REVISION DATE) MARATHON ELECTRIC, LLC. ALL RIGHTS RESERVED. PROPRIETARY AND CONFIDENTIAL INFORMATION - THIS DOCUMENT IS THE PROPERTY OF MARATHON ELECTRIC, LLC. ("OWNER") AND CONTAINS OWNER'S PROPRIETARY INFORMATION. ANY PERSON, CORPORATION OR OTHER FIRM RECEIVING IT IS DEEMED, BY RECEIVING IT, TO AGREE THAT IT, AND/OR ANY PART OF IT, SHALL NOT BE DISCLOSED TO ANY PERSON, CORPORATION OR OTHER ENTITY, DUPLICATED, AND/OR USED, EXCEPT AS EXPRESSLY APPROVED IN WRITING IN ADVANCE BY OWNER. THIS DOCUMENT SHALL BE RETURNED TO OWNER UPON REQUEST. IT MAY BE SUBJECT TO CERTAIN RESTRICTIONS UNDER APPLICABLE EXPORT CONTROL LAWS AND REGULATIONS.

TOLERANCES (EXCEPT AS NOTED):

DEC.	INCH	mm	ANGLE
.X	±0.1	[±3]	±7' 30"
.XX	±0.03	[±0.8]	
.XXX	±0.005	[±0.13]	
.XXXX	±0.0005	[±0.013]	

REMOVE BURRS & BREAK SHARP EDGES: .003/.015 [.08/.38] X 45°
CORNER FILLETS: R.02 [.5]
MACHINED SURFACES: 200 INCH / 5.1 mm
mm DIMENSIONS IN [BRACKETS] ARE FOR REFERENCE ONLY

DRAWN BY	CTO
DATE	07-05-2007
APPROVED BY	SW
DATE	3/26/2008
REFERENCE	

marathon™

DESCRIPTION
OUTLINE
180 FR.

MATERIAL | PROCESS/FINISH

THIRD ANGLE PROJECTION

SIZE B | DRAWING NUMBER 035660 | SHEET 1 OF 1

HIGH VOLTAGE

(U1) T1 — L1
(V1) T2 — L2
(W1) T3 — L3
(U2) T4
(U3) T7
(V2) T5
(V3) T8
(W2) T6
(W3) T9

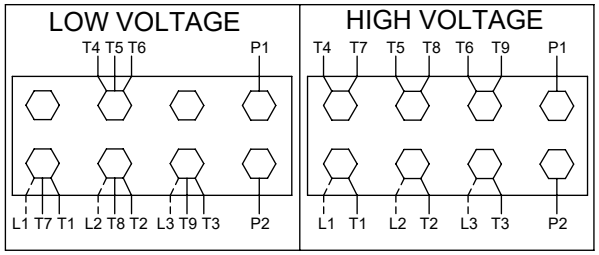

THREE PHASE
DUAL VOLTAGE MOTOR

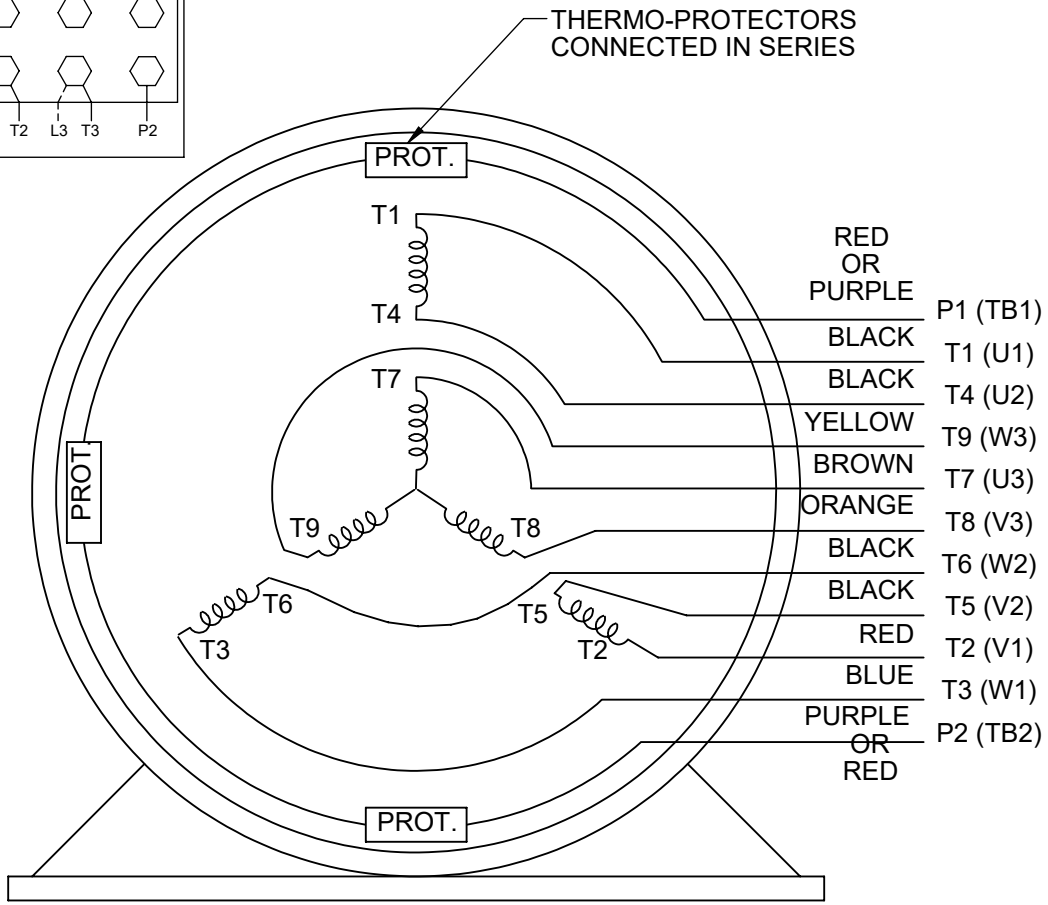

VIEW OF TERMINAL END

NOTE FOR FACTORY USE ONLY:
TO SURGE TEST FOR COMMON CONNECT:
HIGH VOLT: CONNECT P1 TO T1
THEN P2 TO L1
LOW VOLT: CONNECT P1 TO T1 & T7,
THEN P2 TO L1

LOW VOLTAGE

(U1) T1 — L1
(U3) T7 — L1
(V1) T2 — L2
(V3) T8 — L2
(W1) T3 — L3
(W3) T9 — L3
(U2) T4
(V2) T5
(W2) T6

NOTE: LEAD'S COLOR CAN BE YELLOW OR WHITE FOR IMG PLANT

DRAWING REVISION: U	REVISION BY: SB	REV DATE/© DATE: 08/01/2025	PRIMARY DIMENSIONS ARE INCH mm DIMENSIONS IN [BRACKETS] ARE FOR REFERENCE ONLY	DRAWN BY: SMC	marathon™
REQUEST NUMBER: CR-0023654	APPROVED BY: SBD	DATE: 08/01/2025		DATE: 05-13-1992	
REQUEST NUMBER DESCRIPTION: DRAWING TITLE BLOCK UPDATED				APPROVED BY: TB	DESCRIPTION: CONN DIAGRAM-EXTERNAL
				DATE: 05-13-1992	3 PHASE - DUAL VOLTAGE MOTOR
				REFERENCE: EE7308/EE7300	MATERIAL / PROCESS/FINISH
				THIRD ANGLE PROJECTION	SIZE: A — DRAWING NUMBER: EE7308T — SHEET: 1 OF 1

COPYRIGHT (PER REVISION DATE) MARATHON ELECTRIC, LLC. ALL RIGHTS RESERVED. PROPRIETARY AND CONFIDENTIAL INFORMATION - THIS DOCUMENT IS THE PROPERTY OF MARATHON ELECTRIC, LLC. ("OWNER") AND CONTAINS OWNER'S PROPRIETARY INFORMATION. ANY PERSON, CORPORATION OR OTHER FIRM RECEIVING IT IS DEEMED, BY RECEIVING IT, TO AGREE THAT IT, AND/OR ANY PART OF IT, SHALL NOT BE DISCLOSED TO ANY PERSON, CORPORATION OR OTHER ENTITY, DUPLICATED, AND/OR USED, EXCEPT AS EXPRESSLY APPROVED IN WRITING IN ADVANCE BY OWNER. THIS DOCUMENT SHALL BE RETURNED TO OWNER UPON REQUEST. IT MAY BE SUBJECT TO CERTAIN RESTRICTIONS UNDER APPLICABLE EXPORT CONTROL LAWS AND REGULATIONS.

Data Sheet

Date: 7/28/2022
Customer:
Attention:
Submitted by:

marathon electric

184TTGCD6501
112013.002 FAN
Submittal
Data @ 460 V

Motor Load Data

Load	0%	25%	50%	75%	100%	115%	125%	LR	
Current (Amps)	2.30	2.80	3.6	4.8	6.0	6.9	7.5	45.0	
Torque (ft-lb)	0.00	1.85	3.7	5.6	7.5	8.6	9.4	14.0	
RPM	3600	3580	3555	3535	3510	3,500	3490	0	
Efficiency (%)		81.5	87.5	88.5	88.5	87.5	86.5		
P.F. (%)	9.0	52.0	73.0	83.0	88.0	89.0	90.0	50.0	

Motor Speed Data

	LR	Pull-Up	BD	Rated	Idle
Speed (RPM)	0	1800	3000	3510	3600
Current (Amps)	45.0	38.0	28.0	6.0	2.30
Torque (ft-lb)	14.0	12.5	25.0	7.5	0.00

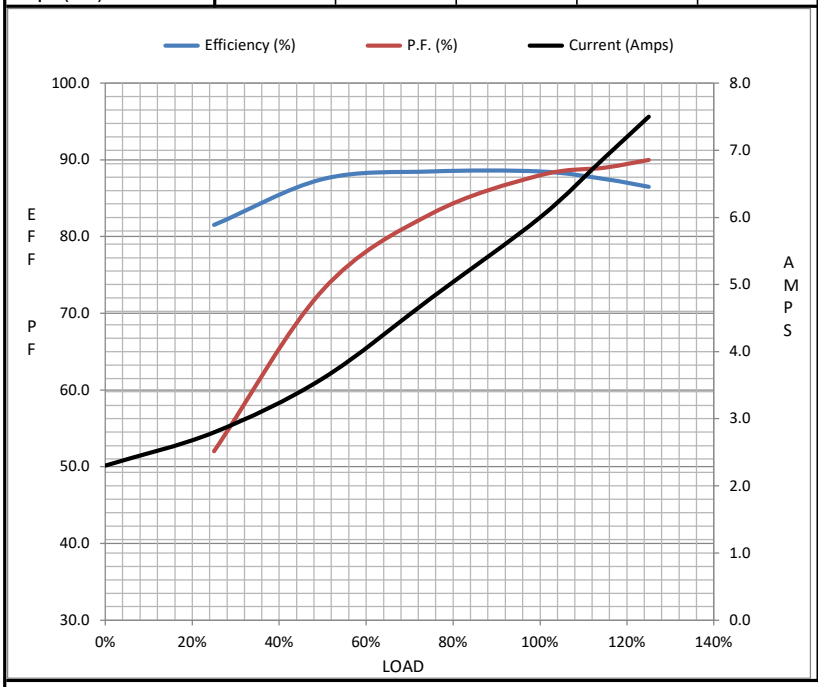

Information Block

HP	5.0
Sync. RPM	3600
Frame	182
Enclosure	EPFC
Construction	TFB
Voltage	230/460#190/380 V
Frequency	60 Hz
Design	B
LR Code letter	J
Service Factor	1.0
Temp Rise @ FL	50 ° C
Duty	CONT
Ambient	40 ° C
Elevation	1,000 feet
Rotor/Shaft wk²	0.23 Lb-Ft²
Ref Wdg	HA31122016 NONE
Sound Pressure @ 1M	70 dBA
VFD Rating	NONE
Outline Dwg	035660-800
Conn. Diag	EE7308T
Additional Specifications:	
0	
0	

EQUIV CKT (OHMS / PHASE)

R1	R2	X1	X2	Xm
2.0980	1.0210	3.9690	1.5880	112.3790

Speed -Torque Curve

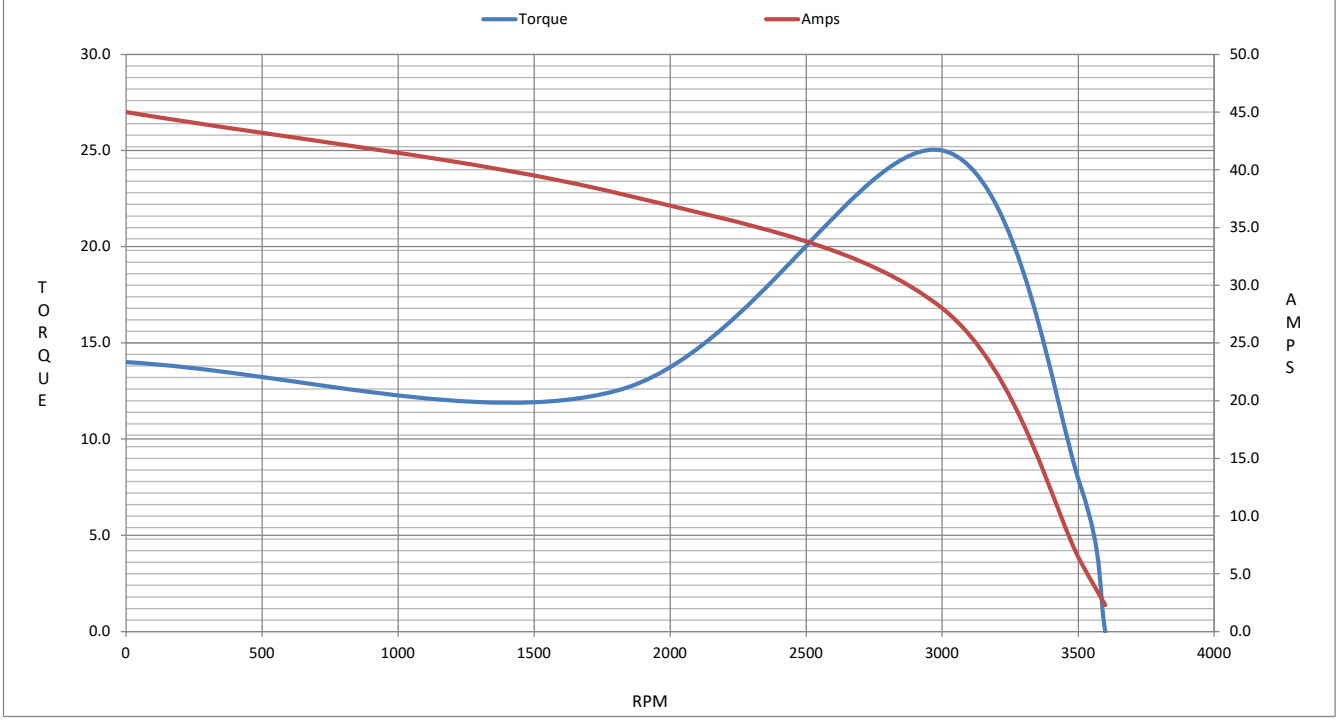

marathon® Motors

P.O. BOX 8003
WAUSAU, WI 54401-8003
PH. 715-675-3311

DATA VOLTS: 460

CERTIFICATION DATA SHEET

CUSTOMER:
ORDER #:
CONN. DIAGRAM: EE7308T
OUTLINE: 035660-800
WINDING: HA31122016 R2 3
SPEED:

CUSTOMER P.O. #:
REFERENCE MODEL #: 184TTGCD6501
CAT #: U061B
CUSTOMER PART #:
MOUNTING: F1 ONLY

TYPICAL MOTOR PERFORMANCE DATA

HP	KW	SYNC RPM	FL RPM	FRAME	ENCLOSURE	TYPE	KVA CODE	DESIGN
5	3.7	3600	3510	184T	EPFC	TFC	J	B

PH	HZ	VOLTS	AMPS	START TYPE	DUTY	INSL	S.F.	AMB	ELEV.
3	60/50	230/460#190/380	12/6&9.4/4.7	ACROSS THE LINE	CONT	F	1.00	50	3300

F.L. EFF	88.5	3/4 LD EFF	88.5	1/2 LD EFF	87.5	GTD EFF	ELECT. TYPE		
F.L. PF	88.0	3/4 LD PF	83.0	1/2 LD PF	73.0	87.5	SQ CAGE IND RUN		

F.L. TORQUE		LR AMPS @ 460 V	L.R. TORQUE			B.D. TORQUE			F.L. RISE (° C)	
7.5	LB-FT	45.0	14.0	LB-FT	187%	25.0	LB-FT	333%	45	

SOUND PRESSURE @ 3 FT.		SOUND POWER	ROTOR WK²		MAX. LOAD WK²		SAFE STALL TIME		STARTS/HOUR	APROX.	MOTOR WGT
70	dBA	79 dBA	0.23	LB-FT²	5.5	LB-FT²	15	SEC.	2	140	LB.

*** SUPPLEMENTAL INFORMATION ***

DE BRACKET TYPE	ODE BRACKET TYPE	MOUNT TYPE	MOTOR ORIENTATION	SEVERE DUTY	HAZARDOUS LOCATION	DRIP COVER	SCREENS	PAINT
STANDARD	STANDARD	RIGID	HORIZONTAL	PREMIUM SEVERE DUTY	DIV 1 EXP PROOF CL I GR CD CL II GR FG T3C	NO	NONE	BLUE - RAL 5003 (EPOXY)

BEARINGS		GREASE	SHAFT TYPE	SPECIAL DE	SPECIAL ODE	SHAFT MATERIAL	FRAME MATERIAL
DE	ODE						
BALL	BALL	POLYREX EM	T	NONE	NONE	1045 HOT ROLLED (C-204)	CAST IRON
6206	6206						

THERMOSTATS	PROTECTORS	WDG RTD's	BRG RTD's	THERMISTORS	CONTROL	SPACE HEATERS
TSTATS (N/C)	NOT	NONE	NONE	NONE	FALSE	NA

R1 (ohms/ph)	R2 (ohms/ph)	X1 (ohms/ph)	X2 (ohms/ph)	Xm (ohms/ph)	VIBRATION (in/sec)	FLOAT
2.098	1.021	3.969	1.588	112.379	0.080	ODE

NOTES
*
*

INVERTER TORQUE: NONE
INV. HP SPEED RANGE: NONE

ENCODER: NONE
NONE
NONE NONE PPR

BRAKE: NONE
NONE NONE
FT-LB: NA
VOLTAGE: NONE HZ:

PREPARED BY:
DATE: 10/19/2022

FORM: 3531 REV_4 2/27/06

UL: NO LETTER - ALL BRANDS-UL LISTED AND CSA CERTIFIED DIV. 1 XP MOTORS