marathon®

Explosion Proof Motors

Model No: 184TTGCD16004
Catalog No: C304C

Explosion Proof Motor, 5 & 3 HP, 3 Ph, 60 & 50 Hz, 230/460 & 190/380 V, 3600 RPM, 184TC Frame, EPFC

©2026 Marathon, All Rights Reserved.

marathon®

Product Information Packet: Model No: 184TTGCD16004, Catalog No: C304C Explosion Proof Motor, 5 & 3 HP, 3 Ph, 60 & 50 Hz, 230/460 & 190/380 V, 3600 RPM, 184TC Frame, EPFC

Nameplate Specifications

Phase	**3**	Output HP	**5 & 3 Hp**
Output KW	**3.7 & 2.2 kW**	Voltage	**230/460 & 190/380 V**
Speed	**3510 & 2925 r/min**	Synchronous RPM	**3600 & 3000 r/min**
Service Factor	**1.00 & 1.00**	Frame	**184TC**
Enclosure	**Explosion Proof Fan cooled**	Thermal Protection	**Thermostat**
Efficiency	**88.5 & 85.5 %**	Ambient Temperature	**50 °C**
Frequency	**60 & 50 Hz**	Current	**12/6 & 9.4/4.7 A**
Power Factor	**88**	Duty	**Continuous**
Insulation Class	**F**	Design Code	**B**
KVA Code	**J**	Drive End Bearing Size	**6207**
Opp Drive End Bearing Size	**6206**	UL	**UL Listed And CSA Certified**
CSA	**Y**	CE	**N**
IP Code	**54**	Number of Speeds	**1**
Hazardous Location	**DIV 1 EXP PROOF CL I GR CD CL II GR FG T3C**		

Technical Specifications

Electrical Type	**Squirrel Cage Inverter Rated**	Starting Method	**Line Or Inverter**
Poles	**2**	Rotation	**Reversible**
Resistance Main	**3.55 O**	Mounting	**Round**
Motor Orientation	**Horizontal**	Drive End Bearing	**Ball**
Opp Drive End Bearing	**Ball**	Frame Material	**Cast Iron**
Shaft Type	**T**	Shaft Diameter	**1.125 in**
Assembly/Box Mounting	**F1 Only**	Inverter Load	**Constant 10:1**

Drawings

Connection Drawing	**EE7308T**	Outline Drawing	**035694-1000**

This is an uncontrolled document once printed or downloaded and is subject to change without notice. Date Created: 16/10/2026

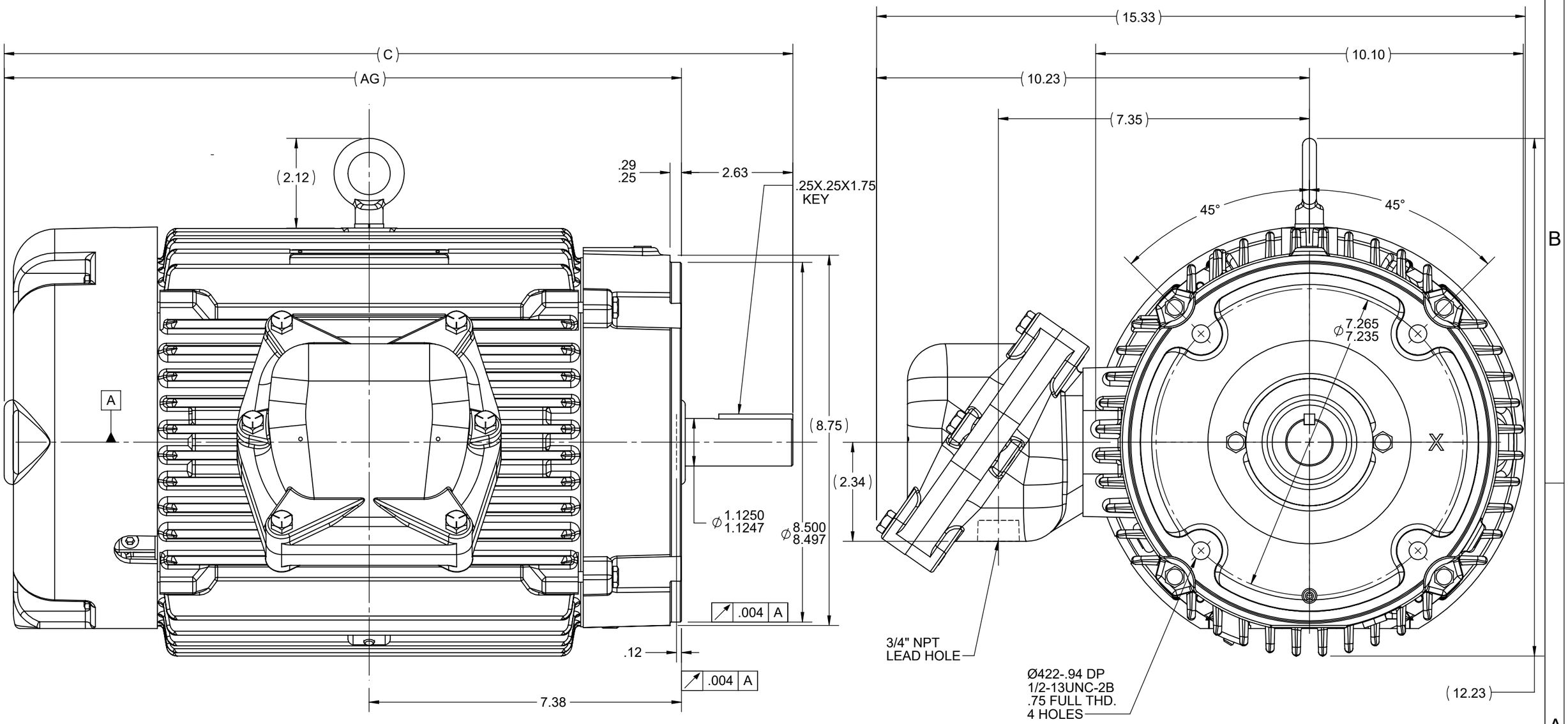

NOTES:
1. NAMEPLATE TO BE READ FROM CONDUIT BOX SIDE OF MOTOR.
2. CONDUIT BOX CAN ROTATED IN 90 STEPS.
3. CONDUIT BOX CAN BE MOUNTED ON OPPOSITE SIDE BY REMOVING BRACKETS AND TURNING FRAME 180 THIS MODIFICATION CAN BE PERFORMED ONLY BY MARATHON ELECTRIC OR BY A FACILITY THAT IS COVERED UNDER UNDERWRITERS LABORATORIES INC.PTKQ, TITLED " MOTOR AND GENERATORS, REBUILT FOR USE HAZARDOUS LOCATIONS".

DASH	FRAME	C	AG	BV
1000	182/184	18.63	16.00	7.38

DRAWING REVISION: C	REVISION BY: DKB	REV DATE/© DATE: 2/7/2025
REQUEST NUMBER: NMR-0237037	APPROVED BY: DKB	DATE: 2/7/2025
REQUEST NUMBER DESCRIPTION: FRAME UPDATED		

COPYRIGHT (PER REVISION DATE) MARATHON ELECTRIC, LLC. ALL RIGHTS RESERVED. PROPRIETARY AND CONFIDENTIAL INFORMATION - THIS DOCUMENT IS THE PROPERTY OF MARATHON ELECTRIC, LLC. ("OWNER") AND CONTAINS OWNER'S PROPRIETARY INFORMATION. ANY PERSON, CORPORATION OR OTHER FIRM RECEIVING IT IS DEEMED, BY RECEIVING IT, TO AGREE THAT IT, AND/OR ANY PART OF IT, SHALL NOT BE DISCLOSED TO ANY PERSON, CORPORATION OR OTHER ENTITY, DUPLICATED, AND/OR USED, EXCEPT AS EXPRESSLY APPROVED IN WRITING IN ADVANCE BY OWNER. THIS DOCUMENT SHALL BE RETURNED TO OWNER UPON REQUEST. IT MAY BE SUBJECT TO CERTAIN RESTRICTIONS UNDER APPLICABLE EXPORT CONTROL LAWS AND REGULATIONS.

TOLERANCES (EXCEPT AS NOTED):

DEC.	INCH	mm	ANGLE
.X	±0.1	[±3]	±7' 30"
.XX	±0.03	[±0.8]	
.XXX	±0.005	[±0.13]	
.XXXX	±0.0005	[±0.013]	

REMOVE BURRS & BREAK SHARP EDGES: .003/.015 [.08/.38] X 45°
CORNER FILLETS: R.02 [.5]
MACHINED SURFACES: 200 INCH / 5.1 mm
mm DIMENSIONS IN [BRACKETS] ARE FOR REFERENCE ONLY

DRAWN BY: TJW	marathon™
DATE: 3/25/2008	
APPROVED BY: SW	DESCRIPTION: OUTLINE, 180 FR. - CAST C'BOX
DATE: 3/26/2008	
REFERENCE	MATERIAL / PROCESS/FINISH
THIRD ANGLE PROJECTION	SIZE: B / DRAWING NUMBER: 035694 / SHEET: 1 OF 1

HIGH VOLTAGE

(U1) T1 — L1
(V1) T2 — L2
(W1) T3 — L3
(U2) T4
(U3) T7
(V2) T5
(V3) T8
(W2) T6
(W3) T9

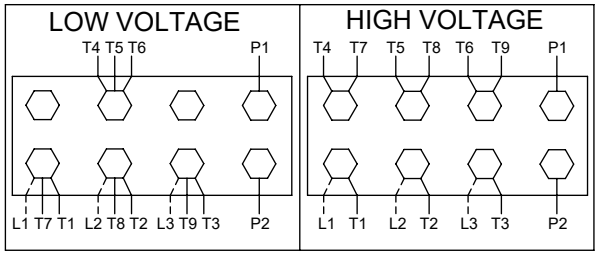

THREE PHASE DUAL VOLTAGE MOTOR

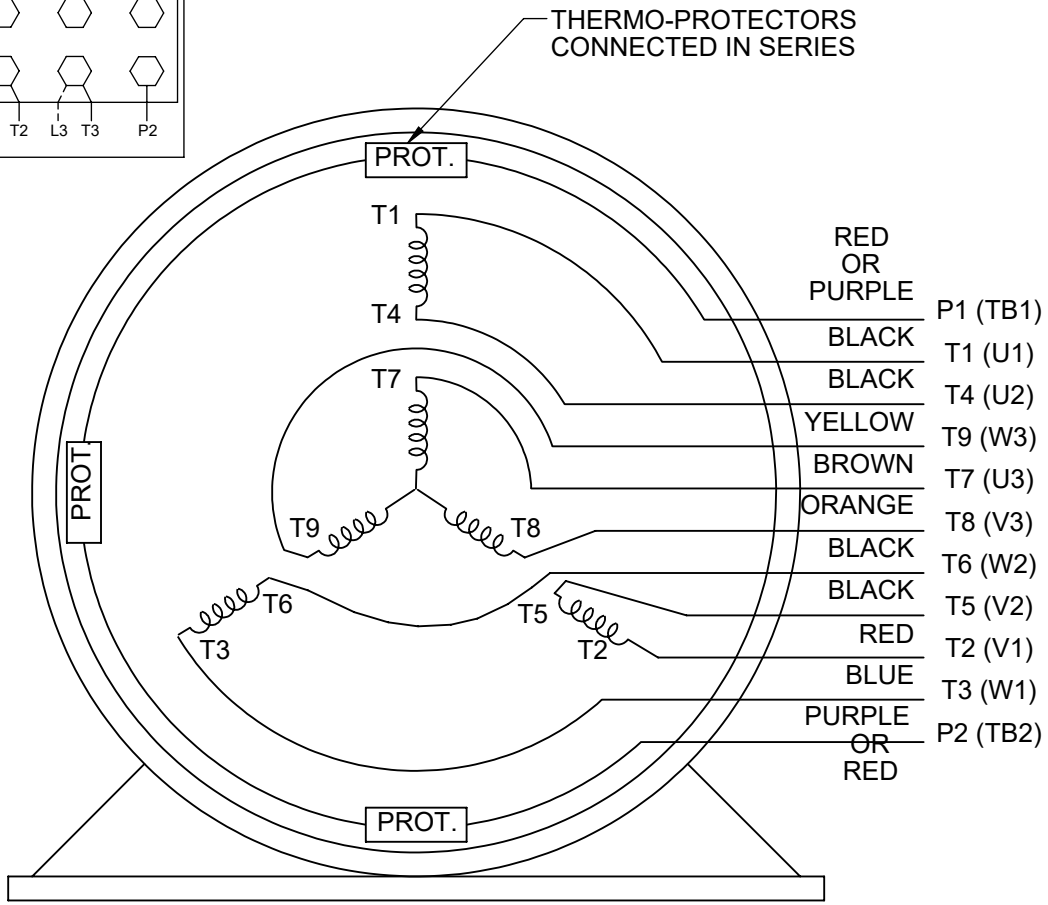

VIEW OF TERMINAL END

NOTE FOR FACTORY USE ONLY:
TO SURGE TEST FOR COMMON CONNECT:
HIGH VOLT: CONNECT P1 TO T1
THEN P2 TO L1
LOW VOLT: CONNECT P1 TO T1 & T7,
THEN P2 TO L1

LOW VOLTAGE

(U1) T1
(U3) T7 — L1
(V1) T2
(V3) T8 — L2
(W1) T3
(W3) T9 — L3
(U2) T4
(V2) T5
(W2) T6

NOTE: LEAD'S COLOR CAN BE YELLOW OR WHITE FOR IMG PLANT

DRAWING REVISION: U	REVISION BY: SB	REV DATE/© DATE: 08/01/2025	PRIMARY DIMENSIONS ARE INCH mm DIMENSIONS IN [BRACKETS] ARE FOR REFERENCE ONLY	DRAWN BY: SMC	marathon™
REQUEST NUMBER: CR-0023654	APPROVED BY: SBD	DATE: 08/01/2025		DATE: 05-13-1992	
REQUEST NUMBER DESCRIPTION: DRAWING TITLE BLOCK UPDATED				APPROVED BY: TB	DESCRIPTION: CONN DIAGRAM-EXTERNAL — 3 PHASE - DUAL VOLTAGE MOTOR
				DATE: 05-13-1992	
				REFERENCE: EE7308/EE7300	MATERIAL / PROCESS/FINISH
				THIRD ANGLE PROJECTION	SIZE: A — DRAWING NUMBER: EE7308T — SHEET: 1 OF 1

COPYRIGHT (PER REVISION DATE) MARATHON ELECTRIC, LLC. ALL RIGHTS RESERVED. PROPRIETARY AND CONFIDENTIAL INFORMATION - THIS DOCUMENT IS THE PROPERTY OF MARATHON ELECTRIC, LLC. ("OWNER") AND CONTAINS OWNER'S PROPRIETARY INFORMATION. ANY PERSON, CORPORATION OR OTHER FIRM RECEIVING IT IS DEEMED, BY RECEIVING IT, TO AGREE THAT IT, AND/OR ANY PART OF IT, SHALL NOT BE DISCLOSED TO ANY PERSON, CORPORATION OR OTHER ENTITY, DUPLICATED, AND/OR USED, EXCEPT AS EXPRESSLY APPROVED IN WRITING IN ADVANCE BY OWNER. THIS DOCUMENT SHALL BE RETURNED TO OWNER UPON REQUEST. IT MAY BE SUBJECT TO CERTAIN RESTRICTIONS UNDER APPLICABLE EXPORT CONTROL LAWS AND REGULATIONS.

Data Sheet

Date: 7/28/2022
Customer:
Attention:
Submitted by:

marathon electric

184TTGCD16004
112013.002 FAN
Submittal
Data @ 460 V

Motor Load Data

Load	0%	25%	50%	75%	100%	115%	125%	LR	
Current (Amps)	2.30	2.80	3.6	4.8	6.0	6.9	7.5	45.0	
Torque (ft-lb)	0.00	1.85	3.7	5.6	7.5	8.6	9.4	14.0	
RPM	3600	3580	3555	3535	3510	3,500	3490	0	
Efficiency (%)		81.5	87.5	88.5	88.5	87.5	86.5		
P.F. (%)	9.0	52.0	73.0	83.0	88.0	89.0	90.0	50.0	

Motor Speed Data

	LR	Pull-Up	BD	Rated	Idle
Speed (RPM)	0	1800	3000	3510	3600
Current (Amps)	45.0	38.0	28.0	6.0	2.30
Torque (ft-lb)	14.0	12.5	25.0	7.5	0.00

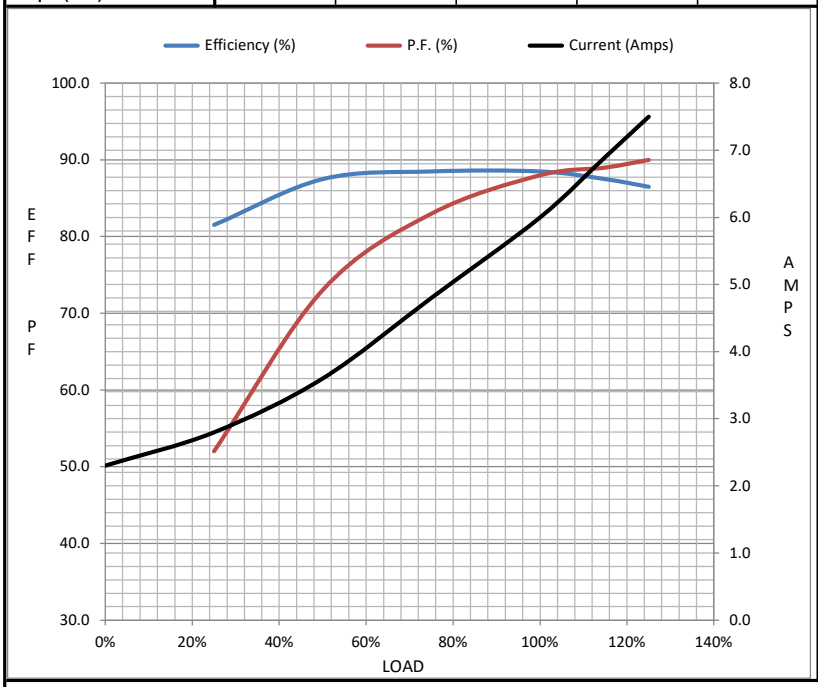

Information Block

HP	5.0
Sync. RPM	3600
Frame	184
Enclosure	EPFC
Construction	TFB
Voltage	230/460#190/380 V
Frequency	60 Hz
Design	B
LR Code letter	J
Service Factor	1.0
Temp Rise @ FL	50 ° C
Duty	CONT
Ambient	50 ° C
Elevation	1,000 feet
Rotor/Shaft wk²	0.23 Lb-Ft²
Ref Wdg	HA31122016 NONE
Sound Pressure @ 1M	70 dBA
VFD Rating	NONE
Outline Dwg	035694-1000
Conn. Diag	EE7308T
Additional Specifications:	
0	
0	

EQUIV CKT (OHMS / PHASE)

R1	R2	X1	X2	Xm
2.0980	1.0210	3.9690	1.5880	112.3790

Speed -Torque Curve

