marathon®

Close-Coupled Pump Motors

Model No: 184TTFBD6033
Catalog No: GT3213A

Close-Coupled Pump Motor, 5 HP, 3 Ph, 60 Hz, 575 V, 1800 RPM, 184JM Frame, TEFC

©2026 Marathon, All Rights Reserved.

marathon®

Product Information Packet: Model No: 184TTFBD6033, Catalog No: GT3213A Close-Coupled Pump Motor, 5 HP, 3 Ph, 60 Hz, 575 V, 1800 RPM, 184JM Frame, TEFC

Nameplate Specifications

Phase	**3**	Output HP	**5 Hp**
Output KW	**3.7 kW**	Voltage	**575 V**
Speed	**1765 r/min**	Synchronous RPM	**1800 r/min**
Service Factor	**1.15**	Frame	**184JM**
Enclosure	**Totally Enclosed Fan Cooled**	Thermal Protection	**No Protection**
Efficiency	**89.5 %**	Ambient Temperature	**40 °C**
Frequency	**60 Hz**	Current	**5.2 A**
Power Factor	**80**	Duty	**Continuous**
Insulation Class	**F**	Design Code	**A**
KVA Code	**K**	Drive End Bearing Size	**6307**
Opp Drive End Bearing Size	**6205**	UL	**Listed**
CSA	**Y**	CE	**Y**
IP Code	**43**	Number of Speeds	**1**
Hazardous Location	**DIVISION 2 T2B**		

Technical Specifications

Electrical Type	**Squirrel Cage Inverter Rated**	Starting Method	**Line Or Inverter**
Poles	**4**	Rotation	**Reversible**
Resistance Main	**2.75 O**	Mounting	**Rigid Base**
Motor Orientation	**Horizontal**	Drive End Bearing	**Ball**
Opp Drive End Bearing	**Ball**	Frame Material	**Rolled Steel**
Shaft Type	**JM**	Shaft Diameter	**1.25 in**
Assembly/Box Mounting	**F1/F2 Capable**	Inverter Load	**Constant 10:1/Variable 10:1**

Drawings

Connection Drawing	**EE7300**	Outline Drawing	**SS600202-200**

This is an uncontrolled document once printed or downloaded and is subject to change without notice. Date Created: 15/10/2026

DASH NO.	B	C	E	2E	2F	2FF	AG	AH	BA	EQ	ET	MOUNTING	FRAME
100	6.50	17.37	3.75	7.50	4.50	5.50	13.12	4.25	3.50	0.62	2.87	F1 OR F2	182JM
200		18.37					14.12						184JM

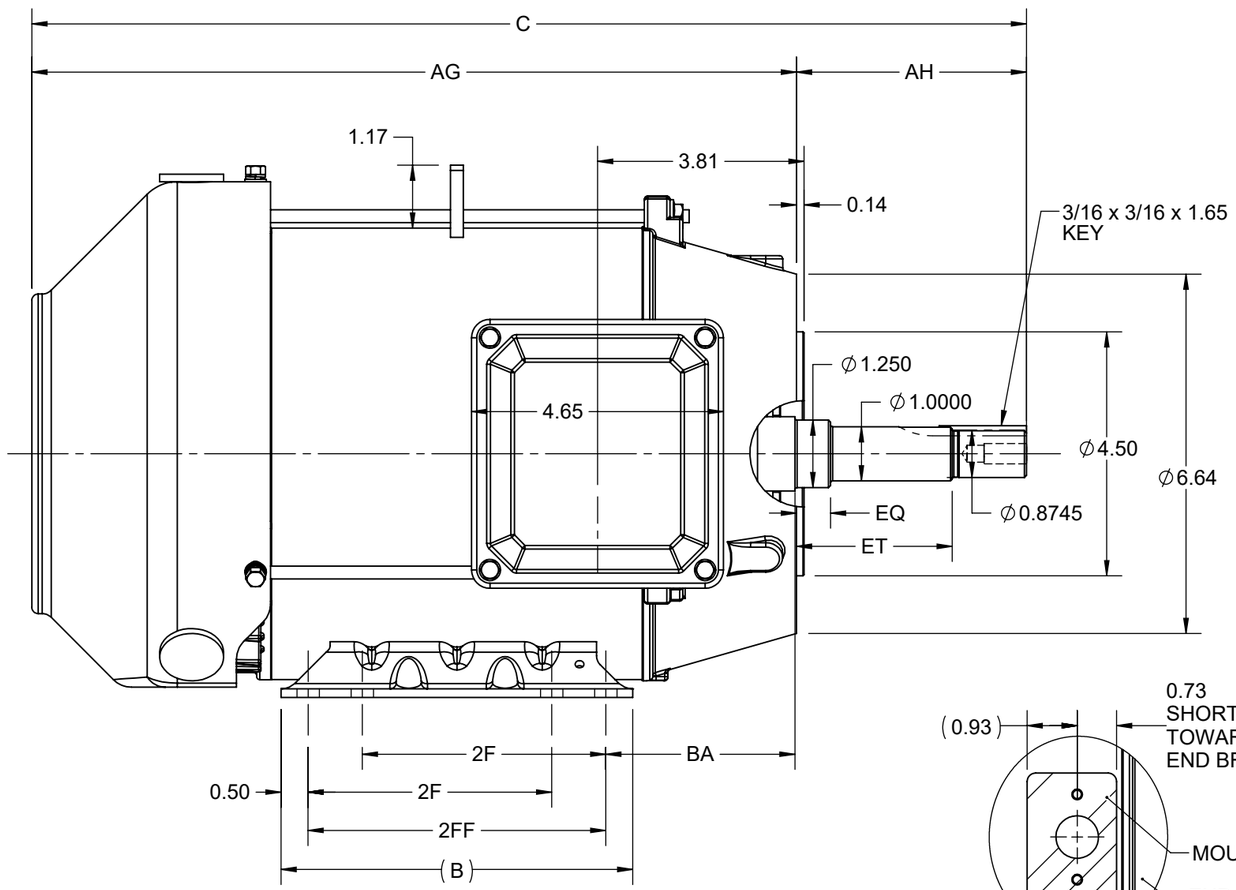

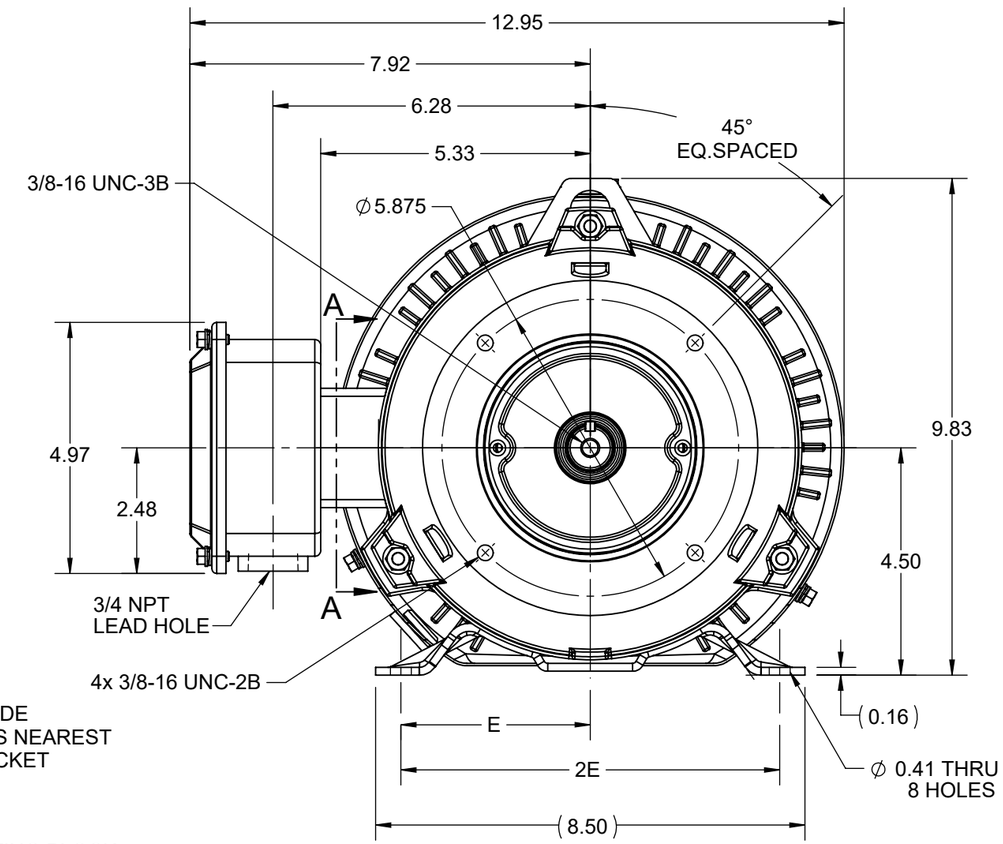

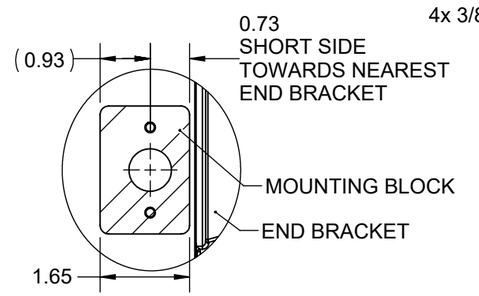

SECTION A-A
MOUNTING BLOCK
ORIENTATION

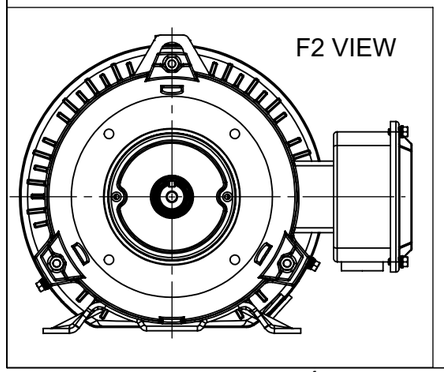

DRAWING REVISION	REVISION BY	REV DATE/© DATE
E	SB	08/12/2025
REQUEST NUMBER	APPROVED BY	DATE
CR-0023556	SBD	08/12/2025

REQUEST NUMBER DESCRIPTION
DRAWING TITLE BLOCK UPDATED

COPYRIGHT (PER REVISION DATE) MARATHON ELECTRIC, LLC. ALL RIGHTS RESERVED. PROPRIETARY AND CONFIDENTIAL INFORMATION - THIS DOCUMENT IS THE PROPERTY OF MARATHON ELECTRIC, LLC. ("OWNER") AND CONTAINS OWNER'S PROPRIETARY INFORMATION. ANY PERSON, CORPORATION OR OTHER FIRM RECEIVING IT IS DEEMED, BY RECEIVING IT, TO AGREE THAT IT, AND/OR ANY PART OF IT, SHALL NOT BE DISCLOSED TO ANY PERSON, CORPORATION OR OTHER ENTITY, DUPLICATED, AND/OR USED, EXCEPT AS EXPRESSLY APPROVED IN WRITING IN ADVANCE BY OWNER. THIS DOCUMENT SHALL BE RETURNED TO OWNER UPON REQUEST. IT MAY BE SUBJECT TO CERTAIN RESTRICTIONS UNDER APPLICABLE EXPORT CONTROL LAWS AND REGULATIONS.

PRIMARY DIMENSIONS ARE INCH
mm DIMENSIONS IN [BRACKETS]
ARE FOR REFERENCE ONLY

DRAWN BY	PRIYA
DATE	08/03/2018
APPROVED BY	SBD
DATE	08/03/2018
REFERENCE	
THIRD ANGLE PROJECTION	

marathon™

DESCRIPTION
OUTLINE
182/184JM FR-NEMA-TEFC-RS

MATERIAL | PROCESS/FINISH

SIZE	DRAWING NUMBER	SHEET
B	SS600202	1 OF 1

THREE PHASE - SINGLE VOLTAGE
MOTOR - CONDUIT BOX @ 'A'

TO REVERSE ROTATION:
INTERCHANGE ANY TWO LINE
LEAD CONNECTIONS

TERMINAL BLOCK WHEN SPECIFIED

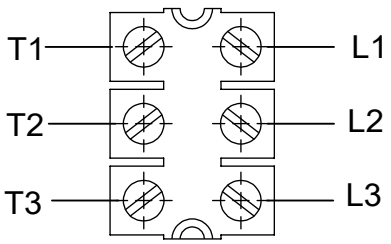

IF MOTOR HAS
9 LEADS

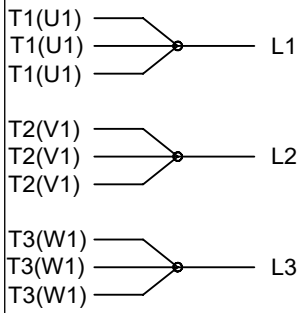

IF MOTOR HAS
6 LEADS

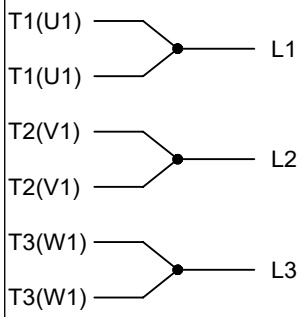

A-9806 DECAL

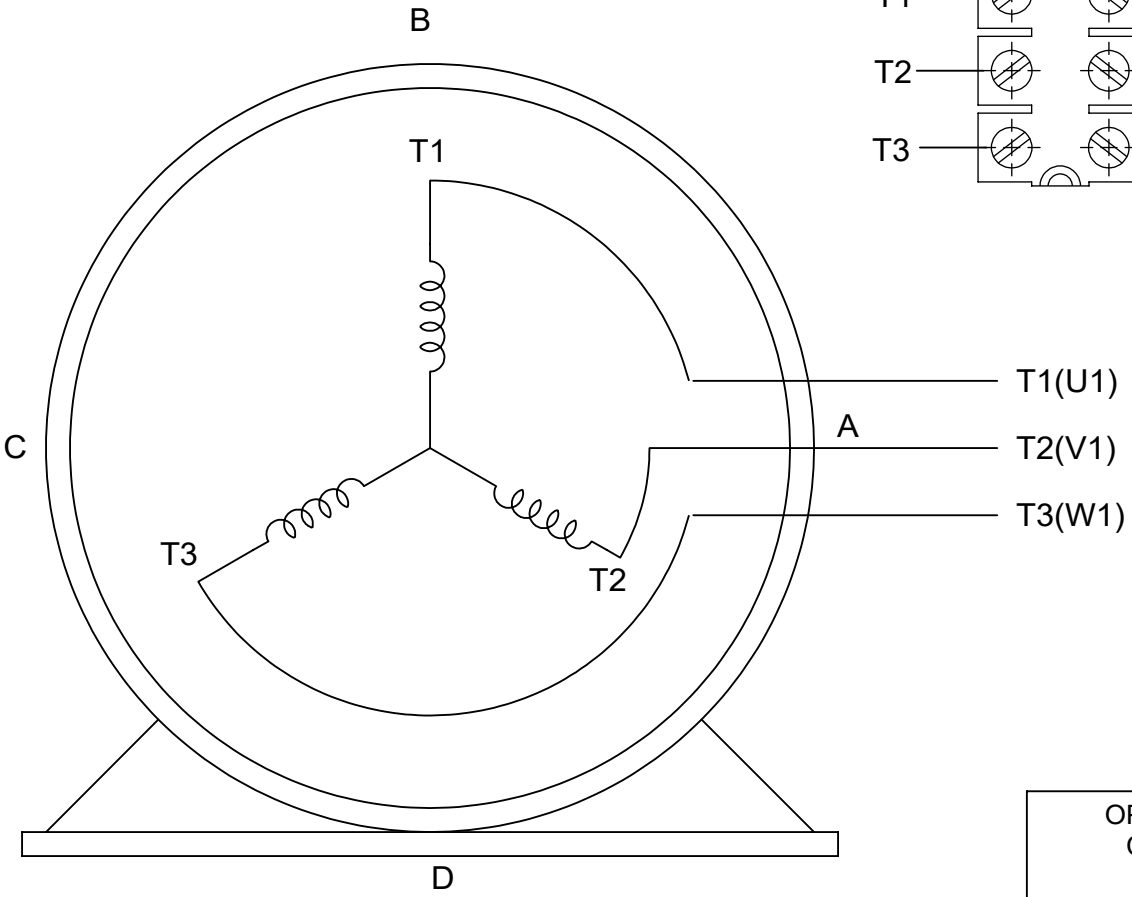

VIEW OF TERMINAL END

OPTIONAL CORD
CONNECTION

L1	WHITE
L2	RED
L3	BLACK

DRAWING REVISION AD	REVISION BY SB	REV DATE/© DATE 08/01/2025	PRIMARY DIMENSIONS ARE INCH mm DIMENSIONS IN [BRACKETS] ARE FOR REFERENCE ONLY	DRAWN BY DA	marathon™
REQUEST NUMBER CR-0023654	APPROVED BY SBD	DATE 08/01/2025		DATE 03-26-1993	
REQUEST NUMBER DESCRIPTION DRAWING TITLE BLOCK UPDATED				APPROVED BY TB	DESCRIPTION CONNECTION DIAGRAM EXTERNAL - SINGLE VOLTAGE - 3Ø MOTOR
				DATE 03-26-1993	
				REFERENCE	MATERIAL / PROCESS/FINISH
				THIRD ANGLE PROJECTION	SIZE A / DRAWING NUMBER EE7300 / SHEET 1 OF 1

COPYRIGHT (PER REVISION DATE) MARATHON ELECTRIC, LLC. ALL RIGHTS RESERVED. PROPRIETARY AND CONFIDENTIAL INFORMATION - THIS DOCUMENT IS THE PROPERTY OF MARATHON ELECTRIC, LLC. ("OWNER") AND CONTAINS OWNER'S PROPRIETARY INFORMATION. ANY PERSON, CORPORATION OR OTHER FIRM RECEIVING IT IS DEEMED, BY RECEIVING IT, TO AGREE THAT IT, AND/OR ANY PART OF IT, SHALL NOT BE DISCLOSED TO ANY PERSON, CORPORATION OR OTHER ENTITY, DUPLICATED, AND/OR USED, EXCEPT AS EXPRESSLY APPROVED IN WRITING IN ADVANCE BY OWNER. THIS DOCUMENT SHALL BE RETURNED TO OWNER UPON REQUEST. IT MAY BE SUBJECT TO CERTAIN RESTRICTIONS UNDER APPLICABLE EXPORT CONTROL LAWS AND REGULATIONS.