marathon®

Inverter (Vector) Duty Motors

Model No: 184THTHD7726
Catalog No: Y543B

Inverter (Vector) Duty Motor, 5 HP, 3 Ph, 60 Hz, 230/460 V, 1800 RPM, 184TC Frame, TENV

©2026 Marathon, All Rights Reserved.

marathon®

Product Information Packet: Model No: 184THTHD7726, Catalog No: Y543B Inverter (Vector) Duty Motor, 5 HP, 3 Ph, 60 Hz, 230/460 V, 1800 RPM, 184TC Frame, TENV

Nameplate Specifications

Phase	**3**	Output HP	**5 Hp**
Output KW	**3.7 kW**	Voltage	**230/460 V**
Speed	**1760 r/min**	Synchronous RPM	**1800 r/min**
Service Factor	**1.00**	Frame	**184TC**
Enclosure	**Totally Enclosed Non Ventilated**	Thermal Protection	**Thermostat**
Efficiency	**89.5 %**	Ambient Temperature	**40 °C**
Frequency	**60 Hz**	Current	**13.0/6.5 A**
Power Factor	**77**	Duty	**Continuous**
Insulation Class	**H**	Design Code	**INV**
KVA Code	**L**	Drive End Bearing Size	**6206**
Opp Drive End Bearing Size	**6306**	UL	**Recognized**
CSA	**Y**	CE	**Y**
IP Code	**55**	Number of Speeds	**1**

Technical Specifications

Electrical Type	**Squirrel Cage Inverter Duty**	Starting Method	**Inverter Only**
Poles	**4**	Rotation	**Reversible**
Resistance Main	**2.27 O**	Mounting	**Rigid Base**
Motor Orientation	**Horizontal**	Drive End Bearing	**Ball**
Opp Drive End Bearing	**Ball**	Frame Material	**Aluminum**
Shaft Type	**T**	Assembly/Box Mounting	**F1/F2 Capable**
Inverter Load	**Constant 1000:1**		

Drawings

Connection Drawing	**EE7308T**	Outline Drawing	**SS621254-200**

This is an uncontrolled document once printed or downloaded and is subject to change without notice. Date Created: 07/11/2026

DASH NO.	B	C	E	2E	2F	2FF	AG	AH	BA	BV	MOUNTING	FRAME
100	5.67	15.82	3.75	7.50	---	4.50	10.88	2.62	3.50	5.87	F1 OR F2	182TC
200	6.69	16.82			4.50	5.50	11.88			6.37		182/184TC

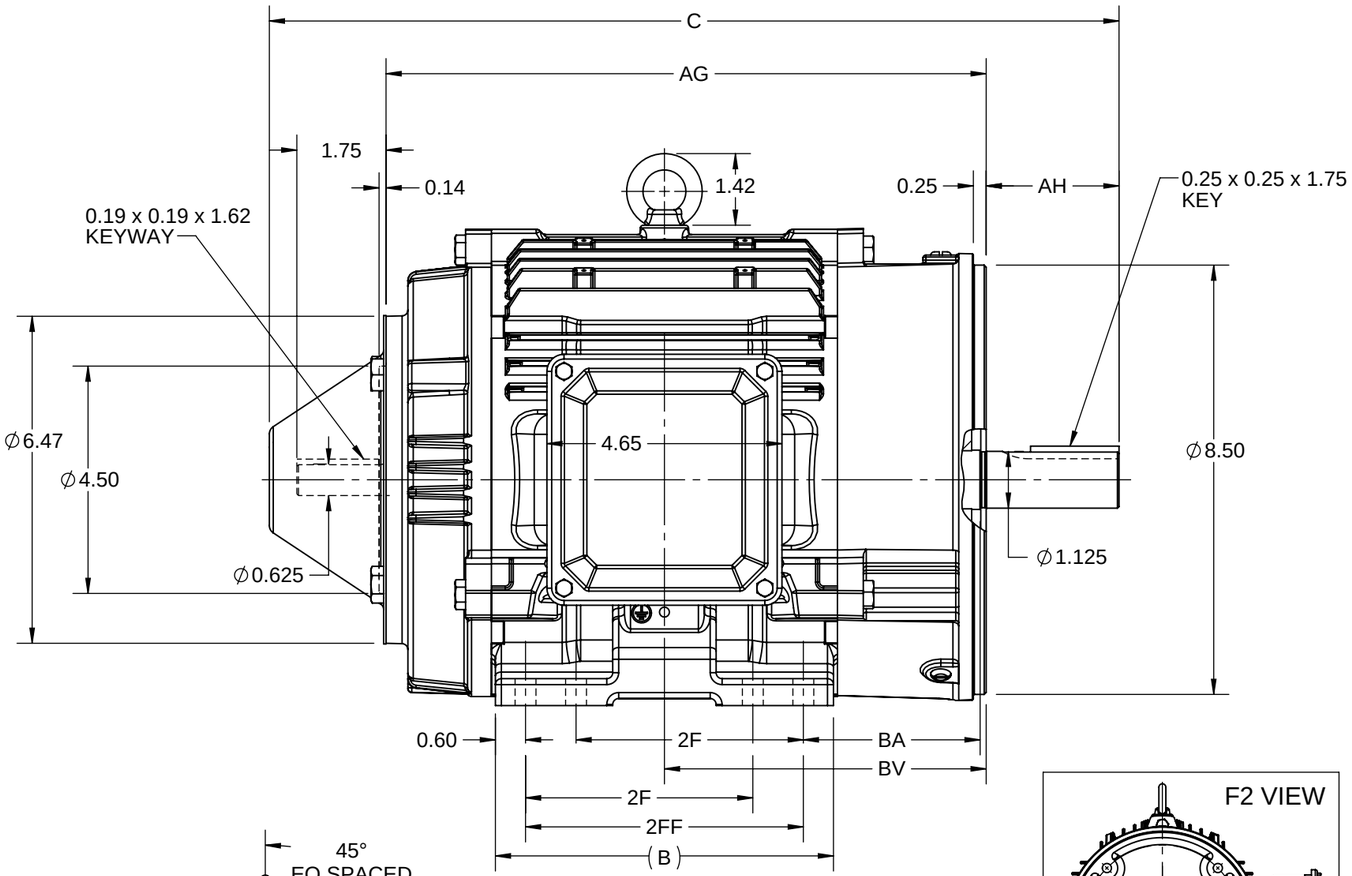

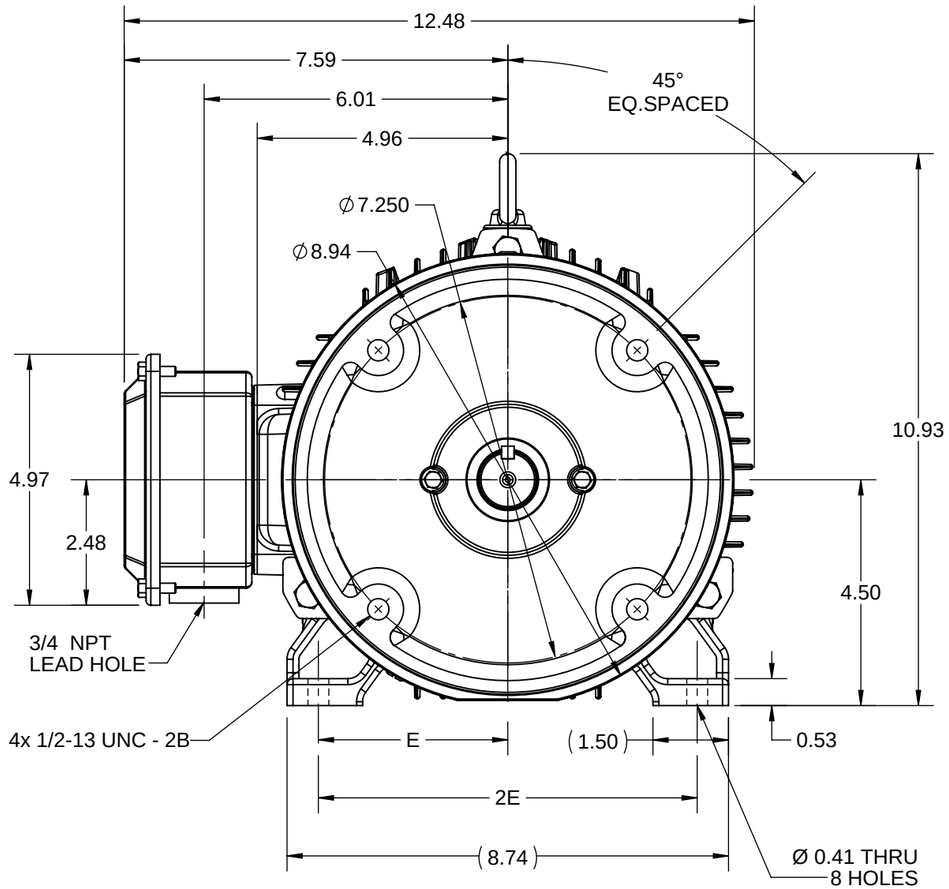

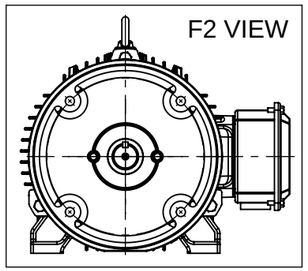

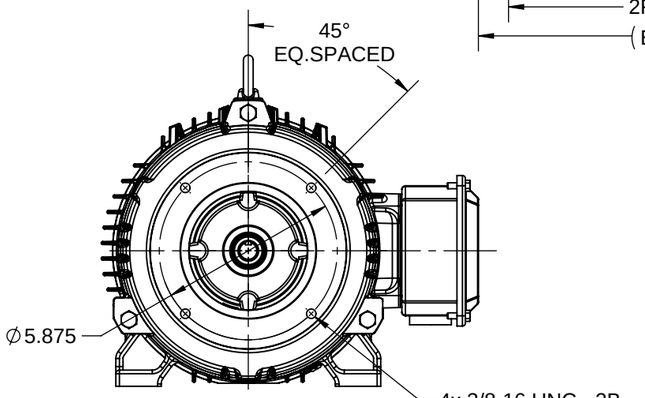

ODE VIEW
COVER REMOVED

DRAWING REVISION: C	REVISION BY: SB	REV DATE/© DATE: 02/05/2026
REQUEST NUMBER: CR-0025279	APPROVED BY: RMS	DATE: 02/05/2026
REQUEST NUMBER DESCRIPTION: DRAWING TITLE BLOCK UPDATED		

COPYRIGHT (PER REVISION DATE) MARATHON ELECTRIC, LLC. ALL RIGHTS RESERVED. PROPRIETARY AND CONFIDENTIAL INFORMATION - THIS DOCUMENT IS THE PROPERTY OF MARATHON ELECTRIC, LLC. ("OWNER") AND CONTAINS OWNER'S PROPRIETARY INFORMATION. ANY PERSON, CORPORATION OR OTHER FIRM RECEIVING IT IS DEEMED, BY RECEIVING IT, TO AGREE THAT IT, AND/OR ANY PART OF IT, SHALL NOT BE DISCLOSED TO ANY PERSON, CORPORATION OR OTHER ENTITY, DUPLICATED, AND/OR USED, EXCEPT AS EXPRESSLY APPROVED IN WRITING IN ADVANCE BY OWNER. THIS DOCUMENT SHALL BE RETURNED TO OWNER UPON REQUEST. IT MAY BE SUBJECT TO CERTAIN RESTRICTIONS UNDER APPLICABLE EXPORT CONTROL LAWS AND REGULATIONS.

PRIMARY DIMENSIONS ARE INCH
mm DIMENSIONS IN [BRACKETS]
ARE FOR REFERENCE ONLY

DRAWN BY: GOPI J	marathon™	
DATE: 07/02/2022	DESCRIPTION: OUTLINE	
APPROVED BY: GNK	182/184TC FR NEMA-ODE 4.5 AK BRKT-TENV AL. FRAME	
DATE: 07/02/2022		
REFERENCE	MATERIAL	PROCESS/FINISH
THIRD ANGLE PROJECTION	SIZE: B / DRAWING NUMBER: SS621254	SHEET: 1 OF 1

HIGH VOLTAGE

(U1) T1 — L1
(V1) T2 — L2
(W1) T3 — L3
(U2) T4
(U3) T7
(V2) T5
(V3) T8
(W2) T6
(W3) T9

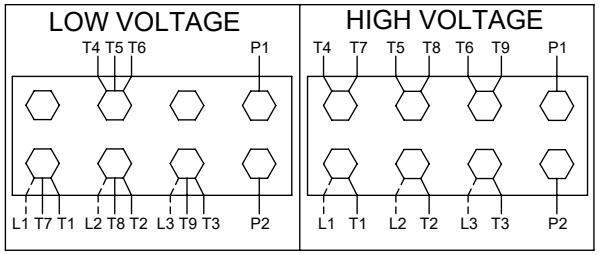

THREE PHASE DUAL VOLTAGE MOTOR

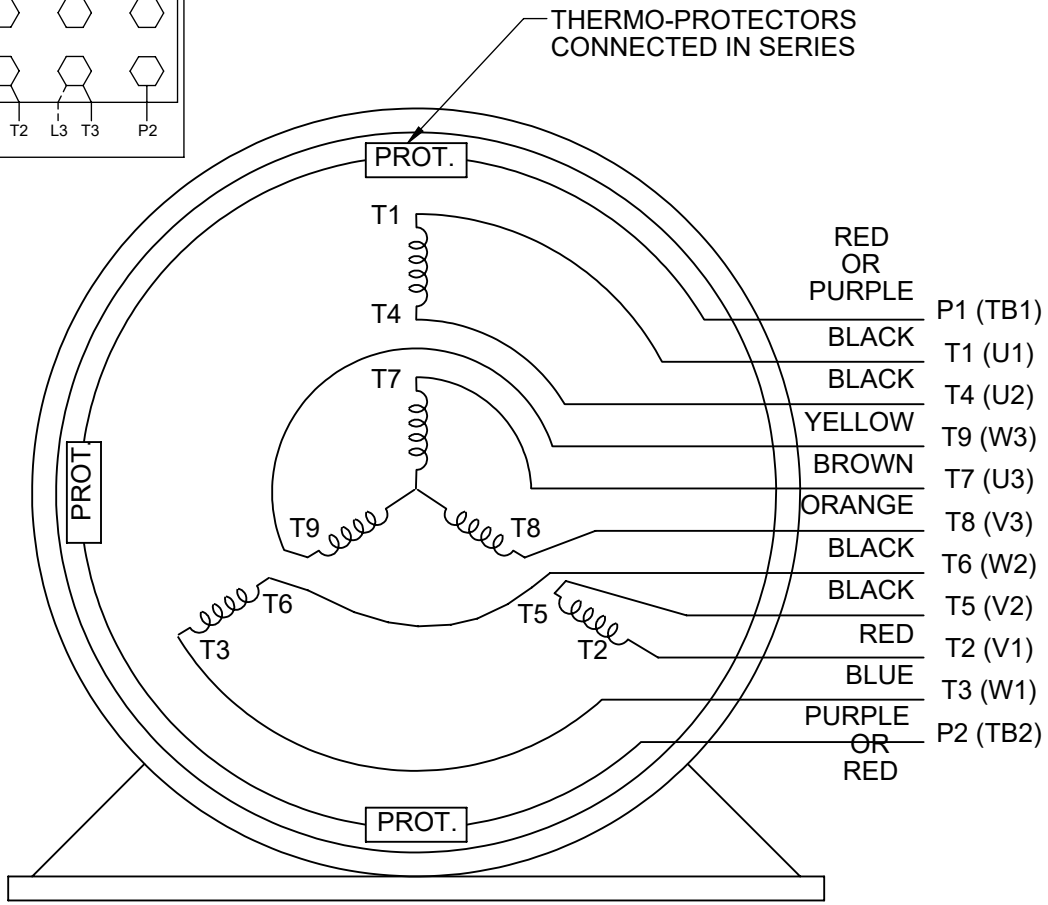

VIEW OF TERMINAL END

NOTE FOR FACTORY USE ONLY:
TO SURGE TEST FOR COMMON CONNECT:
HIGH VOLT: CONNECT P1 TO T1
THEN P2 TO L1
LOW VOLT: CONNECT P1 TO T1 & T7,
THEN P2 TO L1

LOW VOLTAGE

(U1) T1
(U3) T7 — L1
(V1) T2
(V3) T8 — L2
(W1) T3
(W3) T9 — L3
(U2) T4
(V2) T5
(W2) T6

NOTE: LEAD'S COLOR CAN BE YELLOW OR WHITE FOR IMG PLANT

DRAWING REVISION: U	REVISION BY: SB	REV DATE/© DATE: 08/01/2025	PRIMARY DIMENSIONS ARE INCH mm DIMENSIONS IN [BRACKETS] ARE FOR REFERENCE ONLY	DRAWN BY: SMC	marathon™
REQUEST NUMBER: CR-0023654	APPROVED BY: SBD	DATE: 08/01/2025		DATE: 05-13-1992	
REQUEST NUMBER DESCRIPTION: DRAWING TITLE BLOCK UPDATED				APPROVED BY: TB	DESCRIPTION: CONN DIAGRAM-EXTERNAL
				DATE: 05-13-1992	3 PHASE - DUAL VOLTAGE MOTOR
				REFERENCE: EE7308/EE7300	MATERIAL / PROCESS/FINISH
				THIRD ANGLE PROJECTION	SIZE: A — DRAWING NUMBER: EE7308T — SHEET: 1 OF 1

COPYRIGHT (PER REVISION DATE) MARATHON ELECTRIC, LLC. ALL RIGHTS RESERVED. PROPRIETARY AND CONFIDENTIAL INFORMATION - THIS DOCUMENT IS THE PROPERTY OF MARATHON ELECTRIC, LLC. ("OWNER") AND CONTAINS OWNER'S PROPRIETARY INFORMATION. ANY PERSON, CORPORATION OR OTHER FIRM RECEIVING IT IS DEEMED, BY RECEIVING IT, TO AGREE THAT IT, AND/OR ANY PART OF IT, SHALL NOT BE DISCLOSED TO ANY PERSON, CORPORATION OR OTHER ENTITY, DUPLICATED, AND/OR USED, EXCEPT AS EXPRESSLY APPROVED IN WRITING IN ADVANCE BY OWNER. THIS DOCUMENT SHALL BE RETURNED TO OWNER UPON REQUEST. IT MAY BE SUBJECT TO CERTAIN RESTRICTIONS UNDER APPLICABLE EXPORT CONTROL LAWS AND REGULATIONS.