marathon®

Inverter (Vector) Duty Motors

Model No: 184THTCD8056
Catalog No: Y989A

Inverter (Vector) Duty Motor, 5 HP, 3 Ph, 60 Hz, 230/460 V, 1800 RPM, 184TC Frame, TENV

©2026 Marathon, All Rights Reserved.

marathon®

Product Information Packet: Model No: 184THTCD8056, Catalog No: Y989A Inverter (Vector) Duty Motor, 5 HP, 3 Ph, 60 Hz, 230/460 V, 1800 RPM, 184TC Frame, TENV

Nameplate Specifications

Phase	**3**	Output HP	**5 Hp**
Output KW	**3.7 kW**	Voltage	**230/460 V**
Speed	**1760 r/min**	Synchronous RPM	**1800 r/min**
Service Factor	**1.00**	Frame	**184TC**
Enclosure	**Totally Enclosed Non Ventilated**	Thermal Protection	**Thermostat**
Efficiency	**89.5 %**	Ambient Temperature	**40 °C**
Frequency	**60 Hz**	Current	**13.0/6.5 A**
Power Factor	**77**	Duty	**Continuous**
Insulation Class	**H**	Design Code	**INV**
KVA Code	**L**	Drive End Bearing Size	**6206**
Opp Drive End Bearing Size	**6206**	UL	**Recognized**
CSA	**Y**	CE	**Y**
IP Code	**55**	Number of Speeds	**1**

Technical Specifications

Electrical Type	**Squirrel Cage Inverter Duty**	Starting Method	**Inverter Only**
Poles	**4**	Rotation	**Reversible**
Resistance Main	**2.012 O**	Mounting	**Rigid Base**
Motor Orientation	**Horizontal**	Drive End Bearing	**Ball**
Opp Drive End Bearing	**Ball**	Frame Material	**Cast Iron**
Shaft Type	**T**	Shaft Diameter	**1.125 in**
Assembly/Box Mounting	**F1/F2 Capable**	Inverter Load	**Constant 2000:1**

Drawings

Connection Drawing	**EE7308T**	Outline Drawing	**SS600243-200**

This is an uncontrolled document once printed or downloaded and is subject to change without notice. Date Created: 14/10/2026

DASH NO.	B	C	E	2E	2F	2FF	AG	AH	BA	BV	MOUNTING	FRAME
100	5.67	22.15	3.75	7.50	---	4.50	19.52	2.62	3.50	5.87	F1 OR F2	182TC
200	6.69	23.15			4.50	5.50	20.52			6.37		182/184TC

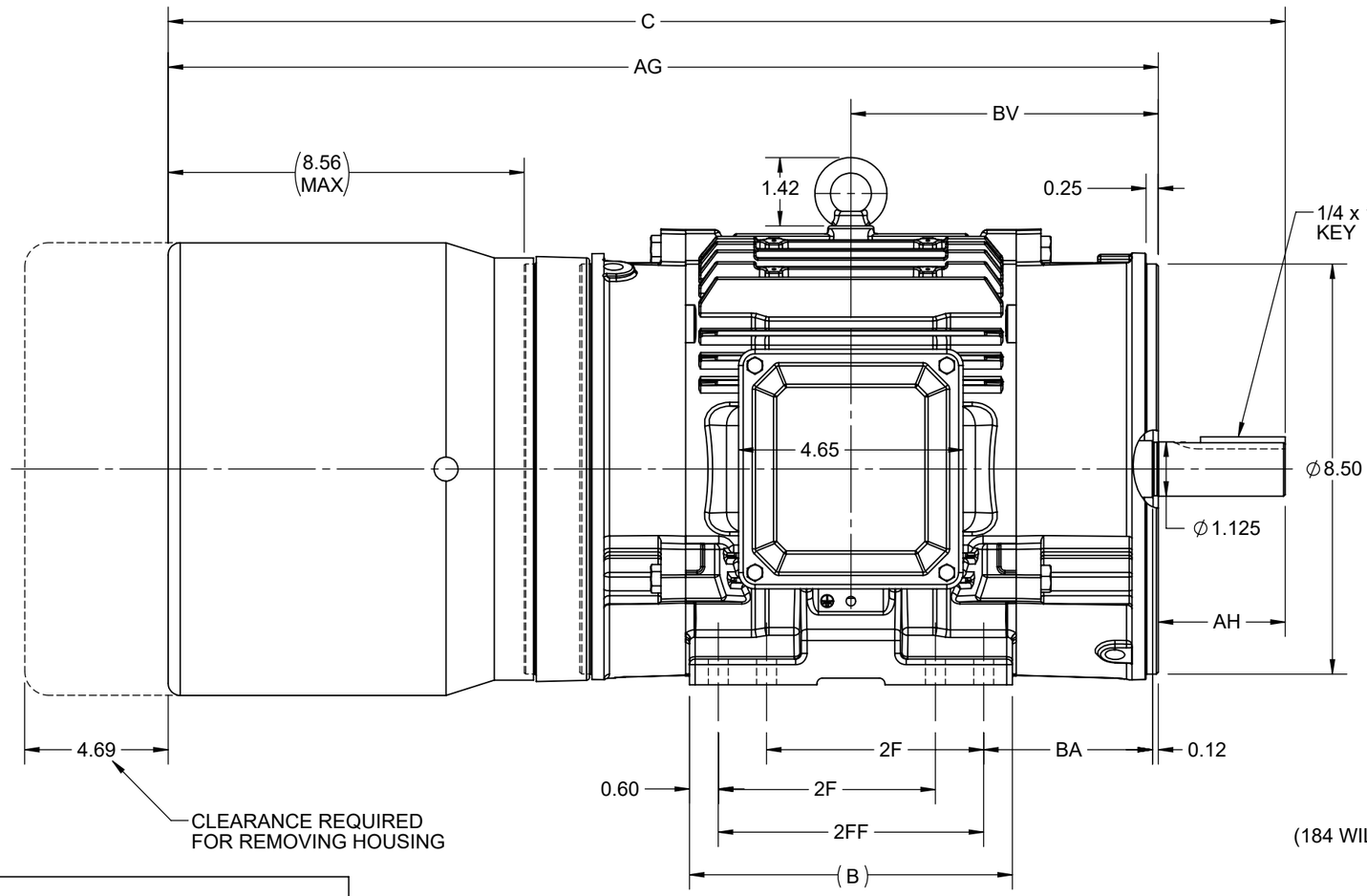

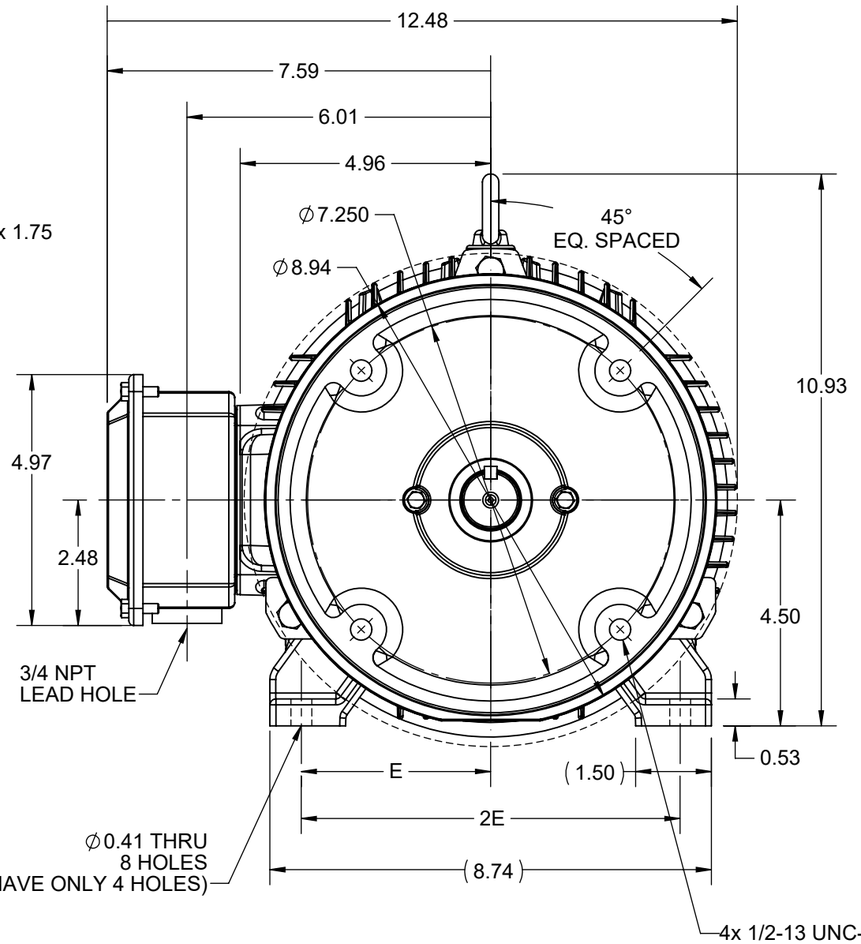

F2 VIEW

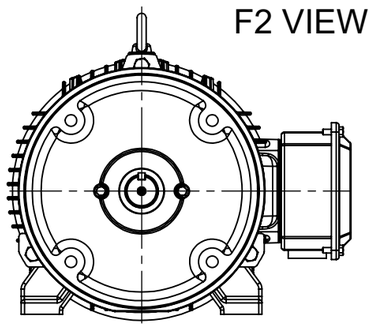

DRAWING REVISION	REVISION BY	REV DATE/© DATE
D	SB	08/14/2025
REQUEST NUMBER	APPROVED BY	DATE
CR-0023600	SBD	08/14/2025

REQUEST NUMBER DESCRIPTION
DRAWING TITLE BLOCK UPDATED

COPYRIGHT (PER REVISION DATE) MARATHON ELECTRIC, LLC. ALL RIGHTS RESERVED. PROPRIETARY AND CONFIDENTIAL INFORMATION - THIS DOCUMENT IS THE PROPERTY OF MARATHON ELECTRIC, LLC. ("OWNER") AND CONTAINS OWNER'S PROPRIETARY INFORMATION. ANY PERSON, CORPORATION OR OTHER FIRM RECEIVING IT IS DEEMED, BY RECEIVING IT, TO AGREE THAT IT, AND/OR ANY PART OF IT, SHALL NOT BE DISCLOSED TO ANY PERSON, CORPORATION OR OTHER ENTITY, DUPLICATED, AND/OR USED, EXCEPT AS EXPRESSLY APPROVED IN WRITING IN ADVANCE BY OWNER. THIS DOCUMENT SHALL BE RETURNED TO OWNER UPON REQUEST. IT MAY BE SUBJECT TO CERTAIN RESTRICTIONS UNDER APPLICABLE EXPORT CONTROL LAWS AND REGULATIONS.

PRIMARY DIMENSIONS ARE INCH
mm DIMENSIONS IN [BRACKETS]
ARE FOR REFERENCE ONLY

DRAWN BY	DESCRIPTION
VS	OUTLINE
DATE	182/184TC NEMA TENV-BRAKE(STEARNS BR & SL85 TACH)
25-06-2020	
APPROVED BY	
SBD	
DATE	
25-06-2020	
REFERENCE	MATERIAL / PROCESS/FINISH
THIRD ANGLE PROJECTION	SIZE B / DRAWING NUMBER SS600243 / SHEET 1 OF 1

marathon™

HIGH VOLTAGE

(U1) T1 — L1
(V1) T2 — L2
(W1) T3 — L3
(U2) T4
(U3) T7
(V2) T5
(V3) T8
(W2) T6
(W3) T9

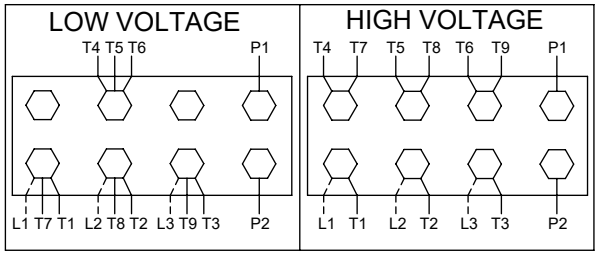

THREE PHASE
DUAL VOLTAGE MOTOR

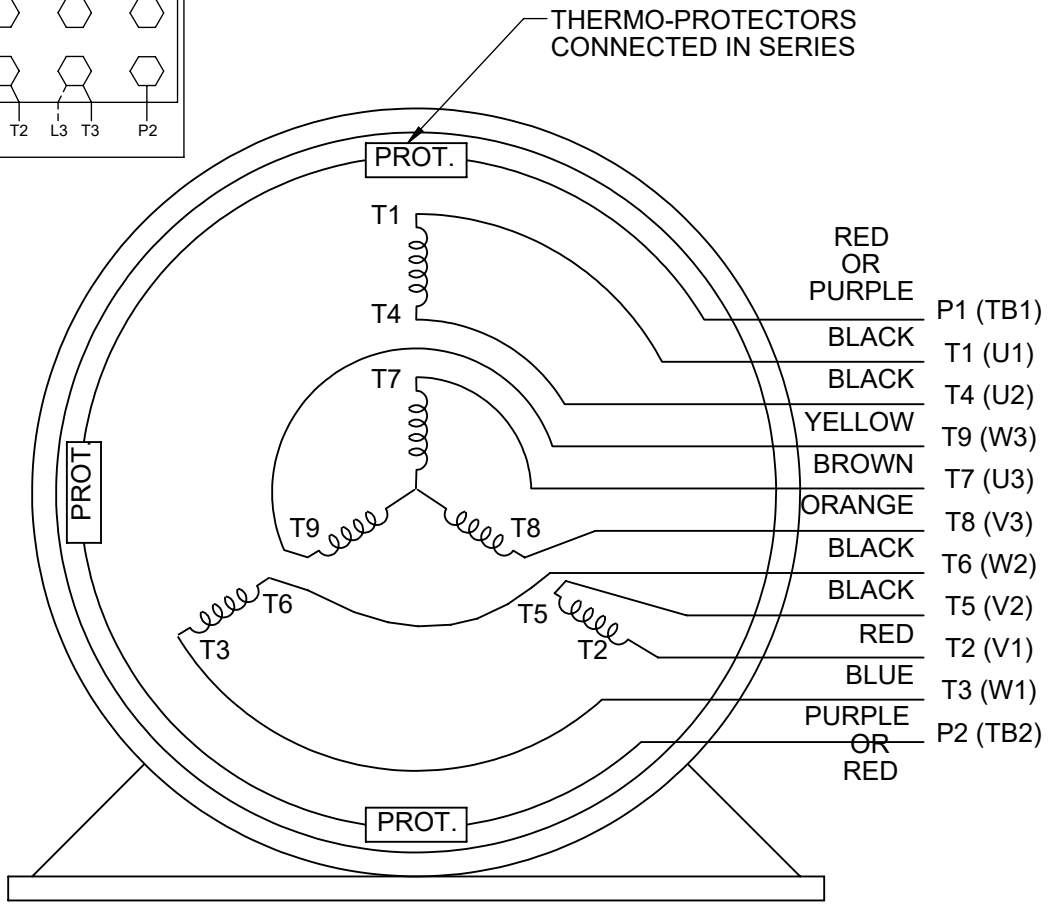

VIEW OF TERMINAL END

NOTE FOR FACTORY USE ONLY:
TO SURGE TEST FOR COMMON CONNECT:
HIGH VOLT: CONNECT P1 TO T1
THEN P2 TO L1
LOW VOLT: CONNECT P1 TO T1 & T7,
THEN P2 TO L1

LOW VOLTAGE

(U1) T1 — L1
(U3) T7 — L1
(V1) T2 — L2
(V3) T8 — L2
(W1) T3 — L3
(W3) T9 — L3
(U2) T4
(V2) T5
(W2) T6

NOTE: LEAD'S COLOR CAN BE YELLOW OR WHITE FOR IMG PLANT

DRAWING REVISION: U	REVISION BY: SB	REV DATE/© DATE: 08/01/2025	PRIMARY DIMENSIONS ARE INCH mm DIMENSIONS IN [BRACKETS] ARE FOR REFERENCE ONLY	DRAWN BY: SMC	marathon™
REQUEST NUMBER: CR-0023654	APPROVED BY: SBD	DATE: 08/01/2025		DATE: 05-13-1992	
REQUEST NUMBER DESCRIPTION: DRAWING TITLE BLOCK UPDATED				APPROVED BY: TB	DESCRIPTION: CONN DIAGRAM-EXTERNAL
				DATE: 05-13-1992	3 PHASE - DUAL VOLTAGE MOTOR
				REFERENCE: EE7308/EE7300	MATERIAL / PROCESS/FINISH
				THIRD ANGLE PROJECTION	SIZE: A — DRAWING NUMBER: EE7308T — SHEET: 1 OF 1

COPYRIGHT (PER REVISION DATE) MARATHON ELECTRIC, LLC. ALL RIGHTS RESERVED. PROPRIETARY AND CONFIDENTIAL INFORMATION - THIS DOCUMENT IS THE PROPERTY OF MARATHON ELECTRIC, LLC. ("OWNER") AND CONTAINS OWNER'S PROPRIETARY INFORMATION. ANY PERSON, CORPORATION OR OTHER FIRM RECEIVING IT IS DEEMED, BY RECEIVING IT, TO AGREE THAT IT, AND/OR ANY PART OF IT, SHALL NOT BE DISCLOSED TO ANY PERSON, CORPORATION OR OTHER ENTITY, DUPLICATED, AND/OR USED, EXCEPT AS EXPRESSLY APPROVED IN WRITING IN ADVANCE BY OWNER. THIS DOCUMENT SHALL BE RETURNED TO OWNER UPON REQUEST. IT MAY BE SUBJECT TO CERTAIN RESTRICTIONS UNDER APPLICABLE EXPORT CONTROL LAWS AND REGULATIONS.

Data Sheet

Date: 7/26/2022
Customer:
Attention:
Submitted by:

marathon® Motors

184THTCD8056

Submittal

Data @ 460 V

Motor Load Data

Load	0%	25%	50%	75%	100%	115%	125%	LR	
Current (Amps)	3.3	3.6	4.3	5.3	6.5	7.2	7.8	58.0	
Torque (ft-lb)	0.00	3.7	7.4	11.1	14.9	17.2	18.8	43.0	
RPM	1800	1790	1780	1770	1760	1,756	1750	0	
Efficiency (%)		81.0	87.7	89.5	89.5	88.8	88.5		
P.F. (%)	7.9	40.7	62.8	75.0	81.5	83.8	84.9	55.1	

Motor Speed Data

	LR	Pull-Up	BD	Rated	Idle
Speed (RPM)	0	880	1300	1760	1800
Current (Amps)	58.0	52.2	41.0	6.5	3.3
Torque (ft-lb)	43.0	36.6	55.0	14.9	0.00

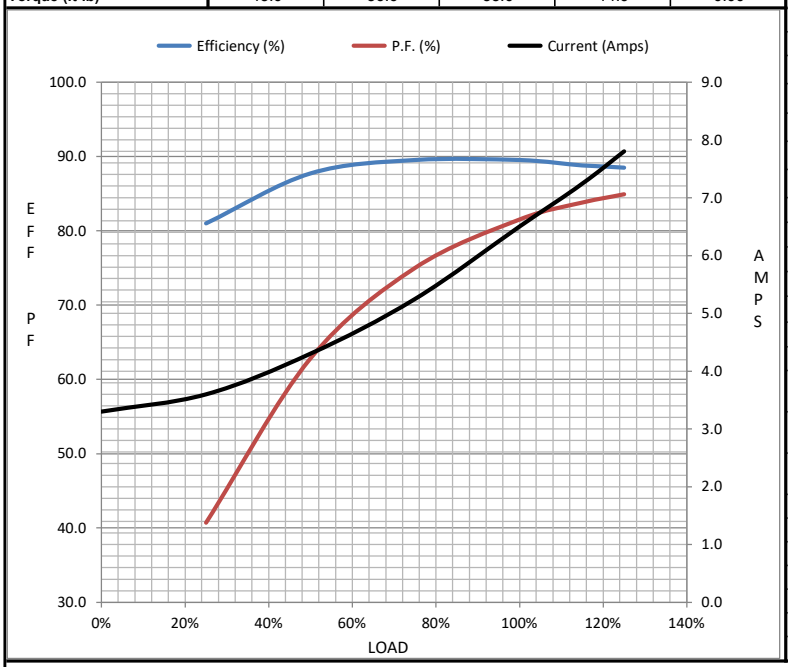

Information Block

HP	5.0	
Sync. RPM	1800	
Frame	184	
Enclosure	TENV	
Construction	TTC	
Voltage	230/460	V
Frequency	60	Hz
Design	INV	
LR Code letter	L	
Service Factor	1.0	
Temp Rise @ FL	105	° C
Duty	CONT	
Ambient	40	° C
Elevation	3,300	feet
Rotor/Shaft wk²	0.40	Lb-Ft²
Ref Wdg	HA31124031 NONE	
Sound Pressure @ 1M	62	dBA
VFD Rating	CONSTANT 2000:1	
Outline Dwg		
Conn. Diag	EE7308T	

Additional Specifications:

0

0

EQUIV CKT (OHMS / PHASE)

R1	R2	X1	X2	Xm
1.5310	1.0770	3.2150	3.6400	80.4010

Speed -Torque Curve

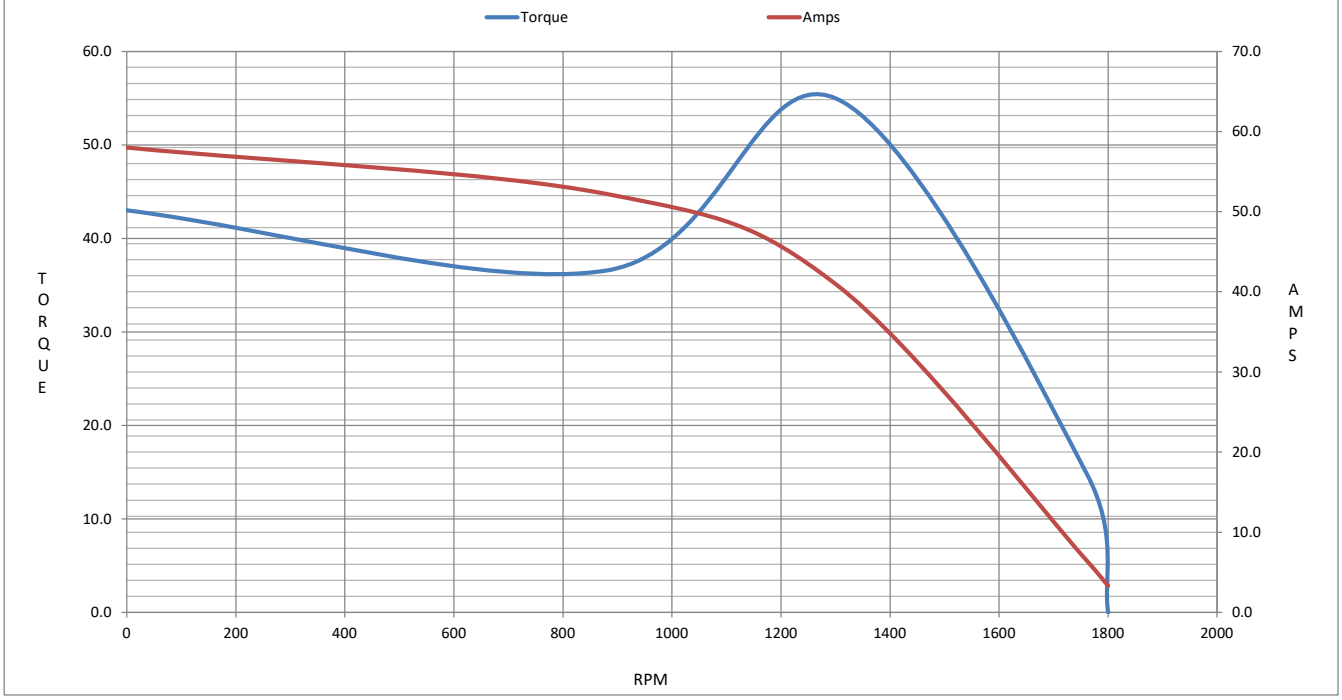

P.O. BOX 8003
WAUSAU, WI 54401-8003
PH. 715-675-3311

marathon® Motors

DATA VOLTS: 460

CERTIFICATION DATA SHEET

CUSTOMER:
ORDER #:
CONN. DIAGRAM: EE7308T
OUTLINE: SS600243-200
WINDING: HA31124031 NONE 2
SPEED:

CUSTOMER P.O. #:
REFERENCE MODEL #: 184THTCD8056
CAT #: Y989A
CUSTOMER PART #:
MOUNTING: F1/F2 CAPABLE

TYPICAL MOTOR PERFORMANCE DATA

HP	KW	SYNC RPM	FL RPM	FRAME	ENCLOSURE	TYPE	KVA CODE	DESIGN
5	3.7	1800	1760	184TC	TENV	TTC	L	INV

PH	HZ	VOLTS	AMPS	START TYPE	DUTY	INSL	S.F.	AMB	ELEV.
3	60	230/460	13/6.5	INVERTER ONLY	CONT	H	1.15	40	3300

F.L. EFF	89.5	3/4 LD EFF	89.5	1/2 LD EFF	87.7	GTD EFF	ELECT. TYPE
F.L. PF	81.5	3/4 LD PF	75.0	1/2 LD PF	62.8	88.5	SQ CAGE INV DUTY

F.L. TORQUE	LR AMPS @ 460 V	L.R. TORQUE	B.D. TORQUE	F.L. RISE (° C)
14.9 LB-FT	62.4	39.8 LB-FT 267%	57.0 LB-FT 383%	90

SOUND PRESSURE @ 3 FT.	SOUND POWER	ROTOR WK²	MAX. LOAD WK²	SAFE STALL TIME	STARTS/HOUR	APROX. MOTOR WGT
62 dBA	71 dBA	0.40 LB-FT²	45 LB-FT²	15 SEC.	2	118 LB.

*** SUPPLEMENTAL INFORMATION ***

DE BRACKET TYPE	ODE BRACKET TYPE	MOUNT TYPE	MOTOR ORIENTATION	SEVERE DUTY	HAZARDOUS LOCATION	DRIP COVER	SCREENS	PAINT
C-FACE	BRAKE AND ENCODER	RIGID	HORIZONTAL	NO	NONE	NO	NONE	BLUE (ENAMEL)

BEARINGS DE	BEARINGS ODE	GREASE	SHAFT TYPE	SPECIAL DE	SPECIAL ODE	SHAFT MATERIAL	FRAME MATERIAL
BALL	BALL	POLYREX EM	T	NONE	NONE	1045 HOT ROLLED (C-204)	CAST IRON
6206	6206						

THERMOSTATS	PROTECTORS	WDG RTD's	BRG RTD's	THERMISTORS	CONTROL	SPACE HEATERS
TSTATS (N/C)	NOT	NONE	NONE	NONE	FALSE	NA

R1 (ohms/ph)	R2 (ohms/ph)	X1 (ohms/ph)	X2 (ohms/ph)	Xm (ohms/ph)	VIBRATION (in/sec)	FLOAT
1.531	1.077	3.215	3.64	80.401	0.150	ODE

* NOTES *

INVERTER TORQUE: CONSTANT 2000:1
INV. HP SPEED RANGE: 2.0 X BASE SPEED

ENCODER: NONE
NONE
NONE NONE PPR

BRAKE: STEARNS
87,000 NEMA 2
FT-LB: 25
VOLTAGE: 208-230/460-190/380 HZ:
UL: V-INS, CONST, OVERHEAT PRT DEV UL REC

PREPARED BY:
DATE: 8/27/2021

FORM: 3531 REV_4 2/27/06