marathon®

50 Hz Motors

Model No: 182TTFBD8029
Catalog No: H1123

50 Hz Motor, 3 HP, 3 Ph, 50 Hz, 220/380/440 V, 1500 RPM, 182TC Frame, TEFC

©2026 Marathon, All Rights Reserved.

marathon®

Product Information Packet: Model No: 182TTFBD8029, Catalog No: H1123 50 Hz Motor, 3 HP, 3 Ph, 50 Hz, 220/380/440 V, 1500 RPM, 182TC Frame, TEFC

Nameplate Specifications

Phase	**3**	Output HP	**3 Hp**
Output KW	**2.2 kW**	Voltage	**220/380/440 V**
Speed	**1445 r/min**	Synchronous RPM	**1500 r/min**
Service Factor	**1.15**	Frame	**182TC**
Enclosure	**Totally Enclosed Fan Cooled**	Thermal Protection	**No Protection**
Efficiency	**82.5 %**	Ambient Temperature	**40 °C**
Frequency	**50 Hz**	Current	**7.75/4.5/3.9 A**
Power Factor	**88.2**	Duty	**Continuous**
Insulation Class	**F**	Design Code	**B**
KVA Code	**G**	Drive End Bearing Size	**6206**
Opp Drive End Bearing Size	**6205**	UL	**Recognized**
CSA	**Y**	CE	**Y**
IP Code	**55**	Number of Speeds	**1**

Technical Specifications

Electrical Type	**Squirrel Cage Induction Run**	Starting Method	**Across The Line**
Poles	**4**	Rotation	**Reversible**
Resistance Main	**4.85 O**	Mounting	**Round**
Motor Orientation	**Horizontal**	Drive End Bearing	**Ball**
Opp Drive End Bearing	**Ball**	Frame Material	**Rolled Steel**
Shaft Type	**T**	Shaft Diameter	**1.125 in**
Assembly/Box Mounting	**F1/F2 Capable**		

Drawings

Connection Drawing	**EE7326E**	Outline Drawing	**SS600201-100**

This is an uncontrolled document once printed or downloaded and is subject to change without notice. Date Created: 14/10/2026

DASH NO.	C	AG	AH	MOUNTING	FRAME
100	15.85	13.22	2.62	F1 OR F2	182TC
200	16.85	14.22			184TC

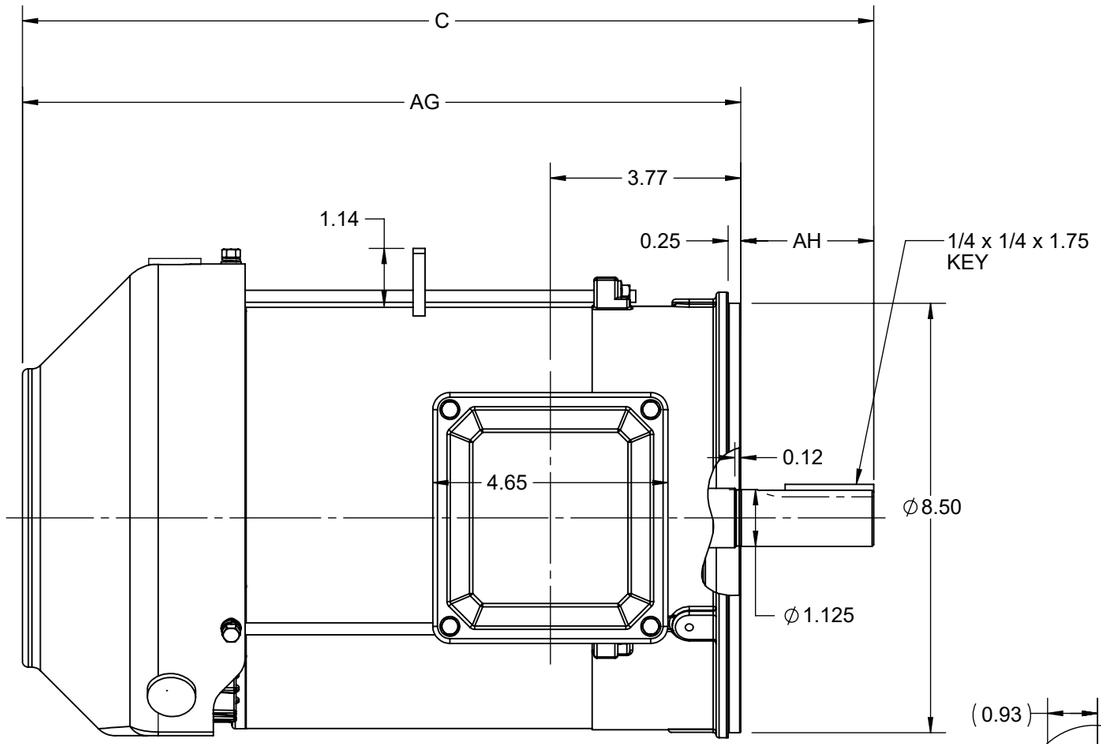

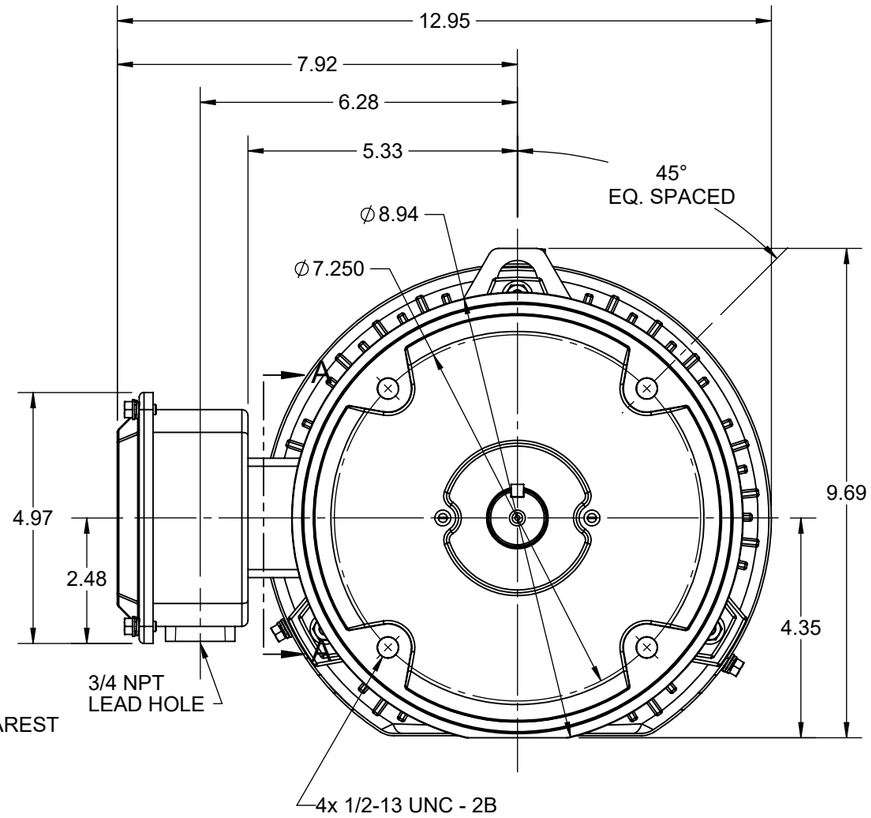

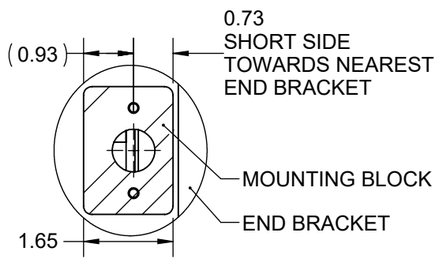

SECTION A-A
MOUNTING BLOCK
ORIENTATION

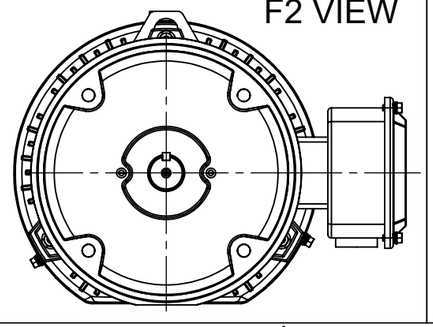

DRAWING REVISION: E	REVISION BY: SB	REV DATE/© DATE: 07/23/2025
REQUEST NUMBER: CR-0023556	APPROVED BY: SBD	DATE: 07/23/2025
REQUEST NUMBER DESCRIPTION: DRAWING TITLE BLOCK UPDATED		

COPYRIGHT (PER REVISION DATE) MARATHON ELECTRIC, LLC. ALL RIGHTS RESERVED. PROPRIETARY AND CONFIDENTIAL INFORMATION - THIS DOCUMENT IS THE PROPERTY OF MARATHON ELECTRIC, LLC. ("OWNER") AND CONTAINS OWNER'S PROPRIETARY INFORMATION. ANY PERSON, CORPORATION OR OTHER FIRM RECEIVING IT IS DEEMED, BY RECEIVING IT, TO AGREE THAT IT, AND/OR ANY PART OF IT, SHALL NOT BE DISCLOSED TO ANY PERSON, CORPORATION OR OTHER ENTITY, DUPLICATED, AND/OR USED, EXCEPT AS EXPRESSLY APPROVED IN WRITING IN ADVANCE BY OWNER. THIS DOCUMENT SHALL BE RETURNED TO OWNER UPON REQUEST. IT MAY BE SUBJECT TO CERTAIN RESTRICTIONS UNDER APPLICABLE EXPORT CONTROL LAWS AND REGULATIONS.

PRIMARY DIMENSIONS ARE INCH
mm DIMENSIONS IN [BRACKETS]
ARE FOR REFERENCE ONLY

DRAWN BY: PRIYA	marathon™	
DATE: 08/03/2018	DESCRIPTION: OUTLINE 182/184TC FR TEFC RS, FOOTLESS	
APPROVED BY: SBD		
DATE: 08/03/2018		
REFERENCE	MATERIAL	PROCESS/FINISH
THIRD ANGLE PROJECTION	SIZE: B / DRAWING NUMBER: SS600201	SHEET: 1 OF 1